INVER GROVE HEIGHTS
PLANNING COMMISSION AGENDA
TUESDAY, JANUARY 5, 2021 – 7:00 p.m.

NOTICE TO RESIDENTS: The Planning Commission is taking proactive steps to prevent the spread of Covid 19 by meeting remote. People wishing to testify at the public hearing should call into the meeting using the following information:

Phone number: 651-450-2471

Individuals may submit written public comments in advance of the meeting by emailing comments to Kim Fox (kfox@ighmn.gov). Comments received prior to 4:00 p.m. on Monday, January 4, 2021, will be provided to the Planning Commission before the January 5, 2021 meeting.

1. CALL TO ORDER

2. APPROVAL OF THE PLANNING COMMISSION MINUTES FOR NOVEMBER 17, 2020 AND DECEMBER 1, 2020

3. OTHER BUSINESS

3.01 CITY OF INVER GROVE HEIGHTS – CASE NO. 21-04X
Review of Capital Expenditure associated with a street reconstruction for Delaney Circle and Delaney Court for consistency with the comprehensive plan.

Planning Commission Action _____

3.02 CITY OF INVER GROVE HEIGHTS – CASE NO. 21-05X
Review of Capital Expenditure associated with NWA emergency pumping systems and force main improvements for consistency with the comprehensive plan.

Planning Commission Action _____

4. APPLICANT REQUESTS AND PUBLIC HEARINGS

4.01 BRIAN FRIEMANN - CASE NO. 20-49V
Consider a variance from the minimum lot size and width standards to convert the vacant building into a duplex for the property located at 7535 Cloman Way.

Planning Commission Action _____

4.02 WATERMARK EQUITY GROUP, LLC – CASE NO. 20-45PUD
Consider the Final Plat and Final PUD Development plan for the property located at the NE Quadrant of 70th Street and South Robert Trail.

Planning Commission Action _____

4.03 TIM SALSCHEIDER - CASE NO. 20-51V

Consider the following variances for the property located at 2306 99th Street:

a) Variance to allow more than one detached accessory structure on the property.

Planning Commission Action _____

b) Variance from the side yard setbacks to allow a structure 10 feet from the side property lines whereas 50 feet is required for structures larger than 1,000 gross square feet.

Planning Commission Action _____

c) Variance to allow an accessory structure larger than 1,600 gross square feet.

Planning Commission Action _____

4.04 SWIFT TRANSPORTATION COMPANY - CASE NO. 20-51V

Consider the following requests for the property located at 11380 Courthouse Blvd:

a) A comprehensive plan amendment to change the designated land use from LI, Light Industry to GI, General Industry.

Planning Commission Action _____

b) A rezoning of the property from I-1, Limited Industry to I-2, General Industry.

Planning Commission Action _____

4.05 UNITED PROPERTIES - CASE NO. 20-532SC

Consider the following requests for the property located at Lot 1, Inver Point Business Park Second Addition:

a) A preliminary and final plat for two lot, one outlot subdivision.

Planning Commission Action _____

b) A conditional use permit to allow manufacturing and assembly on Lot 1, Inver Point Business Park Second Addition

Planning Commission Action _____

5. ADJOURN

This document is available upon 3 business day request in alternate formats such as Braille, large print, audio recording, etc. Please contact Kim Fox at 651.450.2545 or kfox@ighmn.gov.

PLANNING COMMISSION MINUTES - CITY OF INVER GROVE HEIGHTS

Tuesday, November 17, 2020 – 7:00 p.m.
REMOTE MEETING

Chair Maggi called the Planning Commission meeting to order at 7:00 p.m.

Commissioners Present: Elizabeth Niemioja
Annette Maggi
Brett Kramer
Dennis Wippermann
Pat Simon
Scott Clancy
Jonathan Weber
Kate Challeen
Joan Robertson

Commissioners Absent:

Others Present: Allan Hunting, City Planner
Heather Botten, Associate Planner

DRAFT

APPROVAL OF MINUTES
The minutes from the November 4, 2020 Planning Commission meeting were approved as submitted.

Chair Maggi noted that the first two items on the agenda are being tabled to December 1, 2020.

RODGER ESPESETH – CASE NO. 20-37Z (tabled to December 1, 2020
Commissioner Simon read the public hearing notice to consider a rezoning of a portion of the parcel from I-1, Limited Industry to I-2, General Industry, for the property located at 10900 Clark Road. 7 notices were mailed.

BUILDER LOT GROUP (EAGLES LANDING) – CASE NO. 20-38SV (tabled to December 1, 2020)
Commissioner Simon read the public hearing notice to consider the request for a preliminary plat for a 10-lot subdivision to be known as Eagles Landing, and variances from the minimum lot size and width, for the property located at 2655 – 70th Street.

JOE GIBBS – CASE NO. 20-40V

Reading of Notice
Commissioner Simon read the public hearing notice to consider the request for a variance from the 75% clear visibility opening required for a fence from the outside corner of the lot, for the property located at 6512 Arctic Way. No notices were mailed.

Chair Maggi noted that this afternoon Commissioners received an amendment to this request, which was an additional variance related to the height of the fence at the corner.

Presentation of Request
Heather Botten, Associate Planner, explained the request as detailed in the report. She noted that notices were mailed to abutting property owners. She advised that the property is on a corner lot in a planned unit development (PUD). The applicant is requesting an after-the-fact variance to

allow a five-foot picket fence that provides 50% visibility within the outside corner of the property on a corner lot. The property is surrounded by three roads and the fence is installed along the corner side, rear, and side of the property. City Code states that the outside corner of any corner lot shall be free of any fence unless it provides a 75% clear visible opening. The applicant is also requesting a variance for a five-foot fence, details of which were sent to commissioners earlier today. The code states that the outside corner shall not have a fence higher than 42 inches. The area of the variances pertaining to opacity and height are 30 feet in each direction of the outside corner. The intent of these rules appears to be mainly for sight lines and visibility for traffic and emergency vehicles along street intersections and from driveways. The applicant's fence provides 50% visibility and is five feet tall. The fence is located 27 feet from the intersection of 65th Street and Alverno Avenue. The property is unique in the fact that the City planted evergreen trees along 65th Street, but they are on the applicant's property, are taller than 5 feet, and provide a denser screening than what the picket fence does. Staff does not believe that the applicant's fence is affecting traffic visibility from the street intersection or from 65th Street. Staff recommends approval of the request. Commissioners received a copy of an email that was signed by 15 neighboring property owners who are opposed to the request and state that the fence poses a safety hazard from oncoming traffic and for people utilizing the sidewalk.

Chair Maggi asked staff to address the potential for the other exit from this development to be closed eventually.

Allan Hunting, City Planner, advised that the temporary connection to 70th Street from the southern cul-de-sac would eventually go away once a connection to 67th Street to new Argenta Trail is established.

Chair Maggi asked if this would be a fairly high traffic corner.

Ms. Botten replied in the affirmative.

Commissioner Niemioja stated the applicant originally applied for the fence permit in August 2020, but it was not approved as it did not meet zoning or engineering requirements. In October 2020 the applicant received approval of an encroachment agreement from the engineering department to install the fence within a drainage and utility easement. She asked for clarification of the difference between the two and when was the fence built.

Ms. Botten stated that fence permits get reviewed by numerous departments. The way it is set up now is all people reviewing the plans receive them electronically and do their reviews independently. Everyone involved tries to keep each other informed of what is going on and if there are issues. In this case there is a large drainage and utility easement in the back of the lot, so the applicant had to work with the engineering department separately to get an encroachment agreement to install a fence within that easement. The fence was installed on or around the time this encroachment agreement went to City Council.

Chair Maggi asked if the applicant received a permit denial.

Ms. Botten replied that the City just did not approve the permit, and the applicant was notified of what the issues were.

Chair Maggi stated there could have potentially been confusion on the applicant's part between the fence permit and the encroachment agreement.

Commissioner Kramer asked what the timing was of the Stop Work Order that was brought forth while the fence was under construction.

DRAFT

Ms. Botten replied that once she was made aware that the fence was being built without a permit or issues being addressed, she worked with the Chief Building Official, who posted a Stop Work Order. Staff later heard that the fence continued to be installed.

Commissioner Kramer asked if the fence was 15 feet from the curb, as it looks closer than that in person.

Ms. Botten replied that it was slightly over 15 feet from Alverno Avenue and also was not a solid fence.

Commissioner Simon noted that the neighborhood letter states that the work was finished right after the inspector left the property, and she asked what date the Stop Work Order was posted.

Ms. Botten replied that she did not know offhand but could research that further.

Commissioner Robertson asked if Mr. Gibbs received approval to build the fence in the easement but did not receive a building permit and in fact was issued a Stop Work Order, would the lack of a building permit and the imposition of a stop work order have precedent over the engineering approval regarding the encroachment agreement.

Ms. Botten replied that the encroachment agreement would not supersede any permitting process; a fence permit would still be necessary from the Inspections Department.

Commissioner Robertson asked for confirmation that the applicant did not have a permit from the City, had a stop work order, and proceeded anyway.

Ms. Botten replied in the affirmative, stating the stop work order was issued because there was no permit from the City.

Commissioner Robertson asked if there was a required setback from the sidewalk.

Ms. Botten replied there are no required setbacks from a sidewalk, but code states there shall be no solid fence closer than 15 feet from the face of the curb.

Commissioner Robertson asked if the fence was 15 feet from the curb.

Ms. Botten replied in the affirmative.

Commissioner Weber asked if the fencing contractor was a certified contractor with the City.

Ms. Botten replied that they do have a current license with the City.

Commissioner Weber noted that if they had done work here before they likely knew the rules.

Opening of Public Hearing

Joe Gibbs, 6512 Arctic Way, advised he was available to answer any questions.

Chair Maggi asked the applicant if he read and understood the staff report.

Mr. Gibbs replied in the affirmative. He advised that he and his wife were out of town when the fence panels were installed and were not aware, they were being installed at that time. The person who was managing the project, Dave, was also out of town. Unbeknownst to their fence contractor

DRAFT

or himself a crew came and installed the panels while they were both out of town. He advised that Michael Wright, in the Engineering Department, had indicated to Dave that they were okay to install the fence in the drainage and utility easement once the encroachment agreement was notarized and approved by Council. Before applying for the fence permit, they first got approval from their HOA as to the style and height and location of the fence. They approved a height up to five feet tall with equal gapping of plank in the picket fence. As the moved along in the process they became aware there were additional levels of city involvement.

Commissioner Robertson advised that the HOA standards would not have precedence over the City ordinance and therefore the City standards should have been taken into account before designing the fence.

Mr. Gibbs advised that today is the first time he was told that the height of five feet was not appropriate.

Ms. Botten agreed, stating the addendum addressing the height variance was sent to the Gibbs at the same time it was sent to the commission earlier today.

Commissioner Robertson asked for clarification that the City in its permitting process did not address the height of the fence.

Chair Maggi advised that during her conversation with staff today it was determined that the five-foot height was an issue at this corner because of visibility. The applicant could lower the fence in that specific corner, but it might be a bit odd.

Ms. Botten added that the 42 inch fence heigh requirement is only required within 30 feet from the northwest corner of the property; the rest of the fence could be up to seven feet tall per the zoning code and five feet per the HOA.

Commissioner Challeen asked for more information on the timeline of the permit and installation process.

Mr. Gibbs advised that he submitted the fence permit application through the electronic Portal system in August, Michael Wright then reached out regarding the drainage and utility easement and they eventually agreed on an encroachment agreement and removable panels, he gave the City a $1,500 escrow check to pay for staff or legal time associated with preparing the encroachment agreement, Dave got the okay from Michael Wright to install in the drainage and utility easement as the posts start to go in, and at that point they became involved with Ms. Botten. At the beginning they were only hearing from Michael Wright and once they got the encroachment agreement notarized and approved, they started to proceed with the posts.

Commissioner Wippermann asked the applicant why he was not able to comply with code.

Mr. Gibbs replied that the trees planted in his yard by the city provide a denser coverage than his fence, and when vehicles make a stop at this intersection they are already beyond his fence and the evergreens so they would not be an obstruction.

Commissioner Wippermann asked the applicant, regardless of the trees, what prevented him from following code.

Mr. Gibbs replied he was not aware until today of the height restriction at that particular corner and they were just working with Michael Wright regarding the encroachment agreement.

DRAFT

Commissioner Wippermann asked Mr. Gibbs if he was aware of the 75% visibility requirement.

Mr. Gibbs replied he was not aware of that in the beginning.

Commissioner Niemioja asked the applicant if he ever received an orange permit card to post.

Mr. Gibbs replied he was not aware there were three levels of staff that needed to be involved in this, which is very unique. The building inspectors never contacted him until they issued the stop work order when he was out of town.

Commissioner Niemioja understood that three levels of staff could be confusing but questioned whether the applicant received a physical permit at his house.

Mr. Gibbs replied they were not given one, nor instructed by Mr. Wright to obtain one.

Commissioner Robertson asked Mr. Gibbs if in his discussions with Ms. Botten he was aware that he had not actually received approval for a fence permit. She noted that most construction requires a permit from the city before work can begin. She asked also why the fencing installer proceeded without knowledge of the stop work order or a visible permit from the city.

Mr. Gibbs replied that he could not speak for the contractor, but he felt that once the City took his first check for the encroachment agreement, he was not aware that additional funds were to be collected. Also, at the beginning the only person that contacted him was Michael Wright.

Commissioner Clancy asked Mr. Gibbs when he was made aware of the visibility triangle requirement by Ms. Botten, what was the timeline of the installment of the fence from setting the posts to, putting in the panels when Mr. Gibbs was out of town, and when did he get approval from Mr. Wright to build within the drainage and utility easement.

Mr. Gibbs advised that he submitted a fence permit application through Portal, was contacted by Mr. Wright about the encroachment agreement, and had not heard from other levels that needed to be involved. Mr. Wright did not indicate there were other steps, so they proceeded with their project.

Commissioner Clancy asked if Mr. Gibbs knew when he spoke with Mr. Wright.

Ms. Botten advised that according to her research, they applied for the fence permit on August 17. On August 19 Mr. Wright sent the Gibbs' an email regarding the encroachment agreement and what would be required to put the fence in the drainage and utility easement. Ms. Botten called the Gibbs on August 21 about meeting the visibility triangle. She spoke with their fence contractor in early September regarding the request. On September 15 the fees were paid for the encroachment agreement for the city attorney to draft the agreement. On October 16 the stop work order was issued. On October 26 the encroachment agreement went to City Council for approval.

Commissioner Clancy asked what day the contractor installed the fence

Ms. Botten replied that the stop work order was issued on October 16. Work was started prior to that and then after the stop work order was issued as well.

Commissioner Weber asked Mr. Gibbs if he or the contractor pulled the fence permit.

Mr. Gibbs replied that he applied for the fence permit through Portal, not the contractor.

DRAFT

Commissioner Weber asked if the fencing contractor had had a conversation with the City about building in the drainage and utility easement.

Mr. Gibbs replied that Mr. Wright and his contractor had spoken, and they did not start any work until the drainage and utility easement was okay. From his perspective it was okay to proceed at that time.

Commissioner Weber asked if the denial of the permit was based on the drainage and utility agreement being needed or all factors.

Ms. Botten replied all factors.

Commissioner Weber asked how that information was conveyed to the applicant.

Ms. Botten replied that she did not send Mr. Gibbs any written correspondence stating the permit was going to be denied; they typically just do not issue the permit.

Commissioner Simon asked if an encroachment agreement was a permit and, if so, was it different from a fence permit.

Ms. Botten replied that an encroachment agreement is a document drafted by the city attorney and signed by the applicant and approved by City Council. It is then recorded against the property.

Commissioner Simon asked if that was considered a permit and perhaps the applicant thought the one permit covered the entire fence.

Ms. Botten replied that she could not speak for the applicant as to whether he was confused, but the two processes were very different and separate and had different fees associated with each.

Commissioner Kramer asked if the applicant was told why the encroachment agreement was needed. He could understand where a homeowner might get confused if they were told they needed the encroachment agreement to build a fence.

Ms. Botten replied that for Engineering to approve the building permit they needed the encroachment agreement approved first.

Chair Maggi asked if the easement would have been identified in the legal documentation for the property when it was purchased.

Ms. Botten replied that it was depicted on the Certificate of Survey for the property.

Mr. Gibbs advised that he and his wife are first time homebuilders. They were upfront with Lennar that they would be constructing a fence and they were never told that extra steps would be required due to the city infrastructure in their backyard. They were assured by Lennar that it would be no issue, especially if they followed the HOA guidelines and city requirements.

Kris Staples, 6503 Arctic Court, HOA President, advised that the HOA approval specifically directed Mr. Gibbs to work with the City to follow all appropriate codes so that is a point of confusion when arguing about the ignorance of fence building rules. In addition, the fence guidelines are posted on the City's website and specifically states the 42-inch maximum height and 75% visibility requirements. The fence contractor's website also includes a link to the Inver Grove Heights' guidelines. There are statements about the timeline and knowing that the permit did not

DRAFT

exist but continuing to build anyway that they disagree with from the standpoint of various email chains. The letter submitted by residents outlines their opposition to this request and notes that this is a safety issue, and the fence should comply with corner lot restrictions.

Mr. Gibbs stated he has been in contact with City staff since August and their intention to build the fence was always good. He advised they have been very communicative with staff once they were made aware of who they needed to speak with, they have paid $1,800 in fees, and they don't believe their fence is a safety concern as the trees are dense than the fence and a vehicle stopping at the stop sign would be past those objects.

Chair Maggi closed the public hearing.

Planning Commission Discussion

Chair Maggi stated that she can appreciate the Gibbs' being first time home builders with no experience with knowing the regulations, it is a somewhat unusual property because of the easement, but the challenge is to come up with a practical difficulty. Staff outlined a practical difficulty being the trees, but she did not recall planted trees being a practical difficulty as typically it would have more to do with the natural inherent nature of the land. In her mind they should look at this from the perspective of if the request had come in prior to the fence being installed would they have approved it.

Commissioner Weber stated that the process can be confusing to people that do not build homes or pull permits on a regular basis. He feels the applicant went above and beyond what he would consider normal practices for individuals in this circumstance. He understands what this looks like from the standpoint of being asked to approve something after-the-fact, but he would have a hard time telling someone to remove their fence because their contractor did not follow the city's regulations. He would be in favor of approving the variances at this point.

Commissioner Niemioja disagreed, stating she was extremely disappointed that a licensed contractor would move forward on this project without seeing a permit on the front door. She feels for the homeowner because the easement situation is complex, but she does not want to set a precedent, especially since this fence has two issues and there is a lack of a practical difficulty. If they had obeyed the stop work order they would likely be in a different place now.

Commissioner Challeen liked Chair Maggi's suggestion to look at this request as if it was coming to them before the fence was built. She asked if there was a compromise position anyone could come up with or are they basically at the fence stays or the fence goes away.

Chair Maggi replied that unfortunately it is probably the latter.

Commissioner Robertson stated she did not support the request and from her perspective the trees were not a practical difficulty. The fence could have been built inside of the trees, which would have resolved a large portion of the issues being discussed tonight. Ultimately the homeowner is responsible for making sure orange permit sign is visible. Also, although there is no required setback from a sidewalk, she is concerned that the fence will act like a snow fence and the sidewalk, that is intended for public safety, will fill up with snow and be a hazard. She was surprised that the contractor did not express similar concern. She was also concerned about setting a precedent for future after-the-fact variances. If this fence is approved, it would allow everyone along that line of trees to build a fence of varying height and design and she does not think that was the intent of the people who purchased homes there. She struggled to understand how the homeowner could be completely unaware of the permit process and code requirements and she would not vote for approval of the request.

DRAFT

Commissioner Kramer stated he reluctantly could not support the request because of the precedent it would set for homeowners to use their contractors' misstep as grounds for going against city code or using trees as a practical difficulty. If the rest of the neighborhood had come out in support of the request perhaps that might have tipped the scales a little bit.

Commissioner Weber noted that if Mr. Gibbs' abutting neighbor went by the city code regulations, they could build a 7-foot fence all around their backyard, including enclosing the trees. In his opinion this would not necessarily set a precedent because there are so few lots that would have a large boulevard immediately to the north of them. If you pull up to the stop sign next to their lot, you are fully clear of their fence. With what has gone on with this process, and looking at the recommendation by staff, it would be difficult for him to deny it because he feels the homeowner took every step they knew how to take, and the fact that they have a unique lot, and it would be difficult to read through city code and have a clear understanding of what they needed to do. He is in support of the request but feels there could have been better communication between the contractor and city to the homeowner.

Chair Maggi asked Commissioner Weber how he would define a practical difficulty.

Commissioner Weber replied that it would utilize the large right-of-way along 65th Street and he would include the natural screening per staff's suggestion because in 10 years you will not be able to see past those trees.

Chair Maggi noted that in 10 years the homeowner could have cut down every one of those trees.

Commissioner Weber stated that the next person that buys the house could remove the fence too. He questioned how long the trees needed to remain in place as it was difficult to cut down trees in an easement.

Chair Maggi asked staff to address the removal of trees in the easement.

Ms. Botten replied that trees cannot be removed from conservation easements. In this case it is just a standard drainage and utility easement and to her knowledge there is no requirement on how long they have to stay in place.

Commissioner Niemioja stated she was concerned about the precedent of being ignorant of the law and the code. She stated whatever communication took place that somehow made the contractor think they could send a crew to their house without the homeowners being present was very unfortunate, but she had an issue with someone continuing work after receiving a stop work order.

Commissioner Wippermann stated it was unfortunate what the property owners are facing, and the contractor should have given better guidance. However, he agrees that there is no practical difficulty.

Commissioner Weber suggested the practical difficulty be that the lot is surrounded on three sides by right-of-way, which is quite unusual.

Commissioner Robertson struggled with the number of right-of-ways being a practical difficulty.

Chair Maggi agreed, stating given that the variances are for height and visibility of fencing.

DRAFT

Planning Commission Recommendation
Motion by Commissioner Robertson to deny the request for a variance from the 75% clear visibility opening required for a fence from the outside corner of the lot, and to allow a five-foot-tall fence whereas 42 inches is the maximum height allowed within a corner lot clearance area, for the property located at 6512 Arctic Way. Also, to deny the issuance of a permit due to lack of a practical difficulty.

Chair Maggi advised that denying the issuance of a permit was not within their purview.

Commissioner Robertson amended her motion to include only denial of the variances.

Second by Commissioner Simon.

Kim Fox, Recording Clerk, noted that notices were mailed to four property owners.

Motion carried (8/1 - Weber). This item will go to City Council on November 23, 2020.

VANSOUTH LIMITED PARTNERSHIP – CASE NO. 20-39CUP

Reading of Notice
Commissioner Simon read the public hearing notice to consider the request for a conditional use permit for a drive-thru restaurant, for the property located at 1322 Mendota Road. 24 notices were mailed.

Presentation of Request
Allan Hunting, City Planner, advised that the applicant is proposing to construct a stand-alone drive-thru Caribou Coffee shop in the southwest corner of the Southridge Shopping Center site within the existing parking lot. They are requesting a conditional use permit (CUP) to allow a restaurant with a drive thru. There should be no impact on traffic circulation.

Heather Botten, Associate Planner, advised there would be a net reduction of 39 parking spaces; however, the shopping center will still exceed the overall parking minimums. Access to the site is not changing and they are meeting the general CUP criteria. Staff recommends approval of the request with the conditions listed in the report.

Commissioner Weber was concerned about the traffic flow, stating Caribou Coffee drive-thrus typically have quite a few cars in line, especially during morning and evening rushes.

Mr. Hunting stated they did not do a traffic study but do not see that as an issue as there is a lot of available stacking space.

Opening of Public Hearing
Bianca Fine, Fine Associates, Architect Cassie Anderson, and Engineer Don Parr advised they were available to answer any questions.

Chair Maggi asked the applicant if she read and understood the report.

Ms. Fine replied in the affirmative. She advised that the western boundary line along Robert Street was not accurate on the map, but they were working with Dakota County to correct that on their website. She added that they have not yet received the various agreements.

Mr. Hunting noted that he is working with engineering staff to compile the necessary documents.

DRAFT

Chair Maggi closed the public hearing.

Planning Commission Recommendation
Motion by Commissioner Wippermann, second by Commissioner Clancy, to approve the request for a conditional use permit for a drive-thru restaurant, for the property located at 1322 Mendota Road, with the conditions listed in the report.

Motion carried (9/0). This item goes to the City Council on November 23, 2020.

DAWN GAETKE – CASE NO. 20-33ZA

Reading of Notice
Commissioner Simon read the public hearing notice to consider the request for an ordinance amendment to Title 10 of the City Code (Zoning Regulations) to allow market gardening as an allowed use in the E-1, E-2, R-1A, R-1B, R-1C, and R-2 and single family planned unit development districts. No notices were mailed.

Presentation of Request
Allan Hunting, City Planner, explained the request as detailed in the report. He advised that the request is to allow market gardening in single-family residential districts. A market garden is essentially the same as a personal or community garden, which are allowed, with the difference being that these are for growing with the intent to donate or sell rather than just for personal consumption. The way the code is drafted market gardens would be allowed as a principal accessory use in single family zones. It is drafted to allow retail sales if the item is grown on the site and complies with specific conditions, including that sales must occur inside the house with no sales tents, sales be limited to three days per week, and a license would be required if selling on site. The remaining standards are the same as for community gardens. Mr. Hunting stated that staff supports the concept and noted that two other urban agricultural uses have previously been approved (chickens and community gardens). Staff noted three concerns; including 1) having retail activity take place in a residential district could blur the lines between residential and commercial and is not allowed with any other type of home occupation, 2) staff suggests having a one acre minimum lot size to minimize the impact to neighborhoods, and 3) a notification process is recommended to inform the neighbors of what is being proposed. Staff supports the ordinance amendment but would like commissioners to discuss the three topics raised.

Chair Maggi asked if only the crop itself in an unprocessed form could be sold, such as hemp versus CBD or strawberries versus jam.

Mr. Hunting stated the intent is to sell the food that is grown but suggested that the applicant address the question.

Chair Maggi asked if the ordinance would allow someone to purchase a vacant residential property and plant a market garden.

Mr. Hunting replied that personal gardens and community gardens can be a principal use on a property so the language should be changed if Commissioners were not agreeable with a market garden being the sole use.

Commissioner Weber stated the City recently prohibited someone from storing their tree trimming equipment in their own garage and he was concerned about how this would blur the line with regard to home occupations.

DRAFT

Commissioner Challeen stated regarding lot size, this would be somewhat self-limiting as there would likely not be enough return on a small lot for a market garden. She supported urban agriculture and thinks they could set clear parameters regarding equipment, manufactured goods, etc.

Commissioner Simon asked if signage would be allowed.

Mr. Hunting replied that the zoning code allows home occupations to have a small sign and the intent was to apply that to market gardens as well.

Commissioner Simon advised that in her opinion allowing some signage with information such as hours of operation, contact information, etc. would be appropriate.

Commissioner Robertson stated she would be reluctant to approve this ordinance until they received more input from the public as there could be impacts of market gardens that the Planning Commission was not aware of.

Mr. Hunting stated if commissioners wanted a broader discussion, they could add to their motion that they would be supportive of more public input. Currently the process for ordinance amendments is to post notice outside City Hall and on the City's website, publish it in the newspaper, hold a public hearing with the planning commission, and then it goes to the City Council for three readings.

Commissioner Kramer asked how other twin cities suburbs handled market gardens.

Mr. Hunting replied that he did not do a review of other cities' ordinances, but the applicant has stated they are allowed in Minneapolis and St. Paul.

Commissioner Wippermann stated he was not in favor of encouraging more commercial activity in residential areas. Allowing retail sales for the selling of produce is a home occupation and it raises the issue regarding how does the City treat this differently than they treat other home occupations.

Opening of Public Hearing
Dawn Gaetke, 7477 Cahill Avenue, advised she was available to answer any questions.

Chair Maggi asked the applicant if she read and understood the report.

Mrs. Gaetke replied in the affirmative. She stated that to her knowledge no other cities in Dakota County have a market garden ordinance. Throughout the country, however, many cities are embracing urban agriculture, including Minneapolis, St. Paul, and a number of cities in Wisconsin. Regarding the lot size issue, she does not think a minimum lot size needs to be specified because if someone's yard is too small, they probably would not bother with a market garden. Regarding a previous question about processed produce, someone could not produce hemp and then sell CBD because that process is not covered. They could; however, grow strawberries and sell strawberry jam because the Minnesota Pickle Bill allows people to sell home canned products from their homes. Whether this ordinance passes or not, people are allowed to do that today. They would; however, have to sell it through the internet or take it to a farmer's market. Regarding home occupations, she stated that many people are already conducting commercial activity from their homes through the internet, so approving this ordinance amendment would essentially just allow a physical retail sale as opposed to an internet retail sale.

Commissioner Robertson asked for clarification on what is typically allowed in cities that permit

DRAFT

urban agriculture.

Ms. Gaetke replied that most urban agricultural programs are fairly intense and will allow for almost commercial growers. On a vacant city lot, they will allow al grower to establish gardens and sell from there. In most bigger cities it is looked at as a way to avoid urban blight. Suburbs do not necessarily have abandoned lots with urban blight, but they have residents with yards big enough to help supplement their incomes.

Chair Maggi closed the public hearing.

Planning Commission Discussion

Commissioner Niemioja supported this ordinance amendment, stating it is a quiet activity that could help supplement peoples' income and was unlikely to create traffic issues. She recommended that there be a notification process to the abutting neighbors and agreed that community input would be helpful.

Commissioner Weber suggested following the Minnesota MDA guidelines regarding licensure, notification, etc.

Commissioner Wippermann stated there were a number of ways a market garden could impact neighbors, such as traffic and parking.

Commissioner Challeen noted that smell is also a consideration as many gardeners fertilize with manure.

Commissioner Kramer stated his primary concern was how this could affect the neighbors and he believed a notification process was necessary to give abutting property owners the ability to raise their concerns.

Chair Maggi stated it sounds like the commission would like additional information before making a recommendation. She asked what additional information would be needed besides neighbor notification and traffic.

Commissioner Robertson stated that before she could make a recommendation she would need a better understanding of the State guidelines and how they could include those in our ordinance. She noted there are sometimes issues when food is not handled in a way that assures public safety.

Chair Maggi asked if it allowing retail sales for market gardens was a concern when retail sales were not allowed with other home occupations.

Commissioner Robertson agreed that allowing retail sales for a market garden would set a precedent and needed more vetting before moving forward. Also, they should review the criteria for home occupations and see if they should be applied to market gardens as well.

Chair Maggi asked how many residents have gotten urban chicken licenses.

Mr. Hunting replied he was not sure as his department does not handle those.

Commissioner Niemioja asked if setting up a table at the end of someone's driveway and selling vegetables was allowed.

Mr. Hunting replied that currently was not allowed and would continue not to be allowed with the

DRAFT

proposed ordinance amendment.

Commissioner Challeen agreed that this needs more discussion before final recommendations can be made. She hoped they could come up with creative ways the community could help support the idea, perhaps even a community marketplace where people could bring their homegrown food rather than having to sell it from their home or at a farmer's market.

Commissioner Niemioja agreed that she too would like to get input from the community on market gardening, perhaps via a survey or open house.

Chair Maggi noted that home occupations evolve over time and there should be a discussion about this evolving space and how should the city accommodate it, so they are not 20 years behind. For example, the City had many discussions regarding VRBO's and basically renting out people's homes. She stated it would be helpful to understand how similar ordinances are written in other communities.

Mr. Hunting replied that he could work with the applicant on researching other ordinances. He noted that people are already allowed to have personal and community gardens; this ordinance relates more to whether to allow retail sales of the produce from the place where it is grown.

Commissioner Kramer asked how garage sales were regulated, stating this seemed similar to a garage sale in that people show up at certain hours of the day, park their cars on the street, and go to a resident's home for a couple minutes to buy something.

Mr. Hunting replied he was not familiar with the regulations around garage sales but believed there was a limitation on the number of sales that could take place per year.

Chair Maggi stated it sounds as if commissioners would like to table the request in order to get more information.

Mr. Hunting advised they should probably table it until further notice as he was unsure of an exact date this would come back. It would likely take 4-6 months to put something in the newsletter, perhaps create a survey, and give the public time to respond.

Ms. Gaetke responded to earlier questions about State licensing requirements, advising that the State does not require any licensing for selling produce. Produce selling happens with no regulation. It is not until you start processing food that regulation is needed. Regarding the Minnesota Pickle Bill, people can sell up to $5,000 worth per year with taking simple online training. For anything over $5,000 growers must take a course through the University of Minnesota. People are allowed to sell only food that is considered non-dangerous and canned or baked goods need to be labeled appropriately. She noted that the information she forwarded earlier to commissioners included a link to Minneapolis's city code for urban agriculture.

Planning Commission Recommendation

Motion by Commissioner Simon, second by Commissioner Weber, to table until further notice the request for an ordinance amendment to Title 10 of the City Code (Zoning Regulations) to allow market gardening as an allowed use in the E-1, E-2, R-1A, R-1B, R-1C, and R-2 and single family planned unit development districts, in order to get public input.

Motion carried (9/0).

The meeting was unanimously adjourned at 9:00 p.m.

DRAFT

Respectfully submitted,

Kim Fox
Recording Secretary

DRAFT

PLANNING COMMISSION MINUTES - CITY OF INVER GROVE HEIGHTS

Tuesday, December 1, 2020 – 7:00 p.m.
REMOTE MEETING

Chair Maggi called the Planning Commission meeting to order at 7:00 p.m.

Commissioners Present: Elizabeth Niemioja
Annette Maggi
Brett Kramer
Dennis Wippermann
Pat Simon
Scott Clancy
Jonathan Weber
Kate Challeen
Joan Robertson

Commissioners Absent:

Others Present: Allan Hunting, City Planner
Heather Botten, Associate Planner
Heather Rand, Community Development Director

DRAFT

RODGER ESPESETH – CASE NO. 20-37Z (tabled from November 17, 2020

Presentation of Request
Heather Botten, Associate Planner, explained the request as detailed in the report. She advised that the applicant is requesting a rezoning and variances for the existing use on the property. There are no physical changes being proposed to the site or for the existing use. The lot currently has a split zoning; the eastern half of the property is zoned I-1, Limited Industrial and the western half is zoned I-2, General Industrial. The request is to rezone the entire parcel to I-2. In 2007 the applicant received approval of an Interim Use Permit (IUP) to allow a mini-storage facility and outdoor vehicle storage on the property. The IUP was required because the proposed use was not an allowed use in the I-2 district at that time. In 2016 the City Council approved changes to the allowed uses in the I-2 district; one of which was that mini-storage facilities with outdoor vehicle storage would now be a permitted use in the I-2 district. Rezoning the eastern half of the property from I-1 to I-2 would require the property to comply with City Code, Section 10-15-10B relating to outdoor storage in the I-2 district. The applicant is requesting variances from two of those standards, including: 1) to allow outdoor storage to be 47 feet from an agricultural zoning district whereas 100 feet is required, and 2) from outdoor storage screening requirements. This site is unique in that mini storage with outdoor storage has been operating on this property since 2007 and no changes are being proposed to the site itself. There are three houses to the south of the property that are zoned Agricultural. The Agricultural zoning in this case is more of a holding zone as the long-range plan for those properties is for an industrial use. When the IUP was approved the applicant installed substantial landscaping around the property to provide screening for the outdoor storage from the residential properties and the public right-of-way. The closest home sits about ten feet higher in elevation than the storage lot so requiring solid fencing would not provide a benefit to the abutting residential property. Staff recommends approval of the requests. No conditions are being proposed since the use is not changing. Staff heard from one property owner who had general questions.

Opening of Public Hearing
Rodger Espeseth, 10900 Clark Road, advised he was available to answer any questions.

Chair Maggi asked the applicant if he read and understood the report.

Mr. Espeseth replied in the affirmative.

Chair Maggi closed the public hearing.

Planning Commission Recommendation
Motion by Commissioner Simon, second by Commissioner Robertson, to approve the request for a rezoning of a portion of the parcel from I-1, Limited Industry to I-2, General Industry and a variance to allow outdoor storage less than 100 feet from an A, Agricultural zoned property and from the outdoor storage screening requirements, for the property located at 10900 Clark Road, with the practical difficulty as listed in the report.

Motion carried (9/0). This item goes to the City Council on December 14, 2020.

DAVID HAUCH – CASE NO. 20-42V

Reading of Notice
Commissioner Simon read the public hearing notice to consider the request for a variance from the front setback to allow a porch to be located 26 feet from the front property line whereas 30 feet is required, for the property located at 8046 River Road. 3 notices were mailed.

Presentation of Request
Allan Hunting, City Planner, explained the request as detailed in the report. He advised that the applicant is proposing a porch addition that at its closest point would be 26 feet from the front property line. The addition would be a 14-foot-wide overhang over the front door area of the new addition to the existing home. Mr. Hunting stated this property is unique in that there is a garage on this property and the one to the north that are located at or just off the front property line. Also, River Road is not located in the center of the road right-of-way and the right-of-way is much wider than what occurs on modern roads. The proposed porch addition would still be about 60 feet from the roadway surface. Staff recommends approval of the request.

Opening of Public Hearing
The applicant was not present.

Chair Maggi closed the public hearing.

Planning Commission Recommendation
Motion by Commissioner Wippermann, second by Commissioner Robertson, to approve the request for a variance from the front setback to allow a porch to be located 26 feet from the front property line whereas 30 feet is required, for the property located at 8046 River Road, with the practical difficulty as listed in the report.

Commissioner Niemioja stated she was uncomfortable using the existing garages that were closer to the property line and already in violation as a practical difficulty to allow something else, especially since they were likely grandfathered in. She asked if the motioners would consider amending their motion to list the practical difficulty as just the extra wide boulevard.

Commissioner Wippermann and Commissioner Robertson agreed to amend their motion to list only the extra wide boulevard as the practical difficulty.

Motion carried (9/0). This item goes to the City Council on December 14, 2020.

DRAFT

PABLO CASTELLANOS – CASE NO. 20-44V

Reading of Notice
Commissioner Simon read the public hearing notice to consider the request for a variance to allow a solid 48-inch fence whereas 42-inches with 75% clear visibility is required within the front setback, for the property located at 7051 Arlo Way. 6 notices were mailed.

Presentation of Request
Heather Botten, Associate Planner, explained the request as detailed in the report. She advised that the applicant is requesting a variance to allow a solid fence to be 48 inches high within the corner front setback. The fence would be located about 18 feet from the curb and over 80 feet from the closest intersection. The abutting property to the rear of the applicant has their driveway about 27 feet from where ethe fence would be located. The ordinance requires all fences within the corner front yard to be no taller than 42 inches and to have at least 75% open visibility. A solid fence on this property corner could have an adverse impact on the visual appeal of the front yard for the property behind it and could impact the visibility from their driveway. Additionally, allowing taller solid fences in the corner front yard could have an impact on the character of the neighborhood. Staff does not believe the criteria for a variance have been met and are recommending denial of the request. Staff did not hear from any of the abutting property owners.

Chair Maggi asked if this was a situation where there were technically two front yards.

Ms. Botten replied in the affirmative, stating it was a corner lot.

Opening of Public Hearing
Juan Pablo Castellanos, 7051 Arlo Way, advised that he was available to answer any questions. He clarified that the fence portion along Archer Trail was proposed at 48 inches to allow better visibility for the neighbors, but the remainder of the fence would be six feet tall.

Ms. Botten confirmed that her understanding as well was that the northern and western portions would be taller.

Mr. Castellanos advised that they have checked with several companies in the area and no one carries 42-inch fence due to COVID. The proposed vinyl privacy fence would provide safety for their children as this is a main road with a lot of traffic.

Commissioner Robertson asked the applicant if he was requesting a variance for both the height of the fence and the density.

Mr. Castellanos replied in the affirmative.

Commissioner Robertson asked if that was subject to the 75% visibility requirement.

Ms. Botten replied in the affirmative, stating the applicant was asking for a variance to have a solid fence.

Claudia Sanchez, 7051 Arlo Way, asked if the variance could be denied based on neighbors not being able to see.

Chair Maggi explained that one of the requirements of a variance is that there must be a practical difficulty to allow a variance from the code.

DRAFT

Ms. Sanchez asked if the points listed in their narrative were considered, like the fact that they were willing to put the fence even further from the sidewalk.

Chair Maggi advised that the narrative was included in their packet of information; however, that does not relate directly to the zoning requirements on the height maximum of 75% visibility.

Mr. Castellanos asked if it would make a difference is there was more spacing in the fence.

Ms. Botten replied that if the applicant agrees to install a chain link fence instead of a solid fence then only one variance would be necessary for the height.

Mr. Castellanos asked if they would have to submit another variance application.

Chair Maggi replied they would not as the request in front of them tonight included variances for both the height and the density.

Commissioner Wippermann asked if their development had a homeowner's association.

Mr. Castellanos replied in the affirmative but stated he had just received a letter that it would be ending at the end of this year and there would just be neighborhood board members at that point.

Commissioner Wippermann asked if the HOA had reviewed their fence plans.

Mr. Castellanos replied that they had not, but that they would likely accept them if the City was okay with it. They are more concerned about having an old fence installed that would be detrimental to the neighborhood. In this case they are proposing to install a new vinyl fence.

Commissioner Wippermann asked the applicant if he had considered installing a wrought iron fence, like his neighbor, as it would comply with the visibility requirements and would not be as obstructive as a solid fence.

Mr. Castellanos replied they wanted more privacy than that. He added that he spoke with his neighbor, who advised he would have no issue with the vinyl fence.

Commissioner Challeen asked the applicant if he would consider a 42-inch fence if it was available.

Mr. Castellanos replied in the affirmative, stating he called three fence companies, and all stated they could not get a 42-inch fence due to manufacturing shortages due to COVID.

Commissioner Challeen stated she had not done the level of research that Mr. Castellanos had; however, it appeared to now be available and she noted that inventory may have improved.

Mr. Castellanos noted that was a possibility but stated it would likely go up in price due to the shortage.

Ms. Sanchez asked if they would allow a 48-inch metal fence.

Chair Maggi replied that they had not gotten to that part of the discussion yet.

Mr. Castellanos stated they are willing to cooperate and are just frustrated that they cannot get their fence up.

DRAFT

Commissioner Weber stated he can appreciate that it is difficult to find 42-inch privacy panels. Because he thinks visibility is important, he could support a variance for the 48-inch height but not for the opacity.

Chair Maggi closed the public hearing.

Planning Commission Discussion
Commissioner Robertson stated that she appreciated the applicant stating he would be willing to work with the City on alternative options. She advised that when this development was first brought forward Commissioners anticipated that variance requests would be brought forward once people were in their homes and wanted a fence or other amenity. Her concern is that there will be more variance requests in the future, and therefore she believes it is important for Commissioners to be clear right from the beginning about what they can and cannot approve. There was a similar request at the last planning commission meeting, and she believes that vote and the one for this request will contribute to precedent. She stated she did not support the request.

Commissioner Niemioja stated in her opinion visibility is even more important than in the last request because of the curvature of the road and the neighbor needing to be able to see through the fence from their driveway. She also does not see a practical difficulty. She noted that at this point COVID-19 has not been considered a practical difficulty; however, if in the spring there still is no fencing material available that is reasonably accessible in the correct height perhaps that is a practical difficulty the City Council could consider. At this point she believes the applicant can utilize their property with the kind of fencing that would keep their children safe while complying with code.

Planning Commission Recommendation
Motion by Commissioner Robertson, second by Commissioner Niemioja, to deny the request for a variance to allow a solid 48-inch fence whereas 42-inches with 75% clear visibility is required within the front setback, for the property located at 7051 Arlo Way, based on the lack of a practical difficulty.

Motion carried (9/0). This item goes to the City Council on December 14, 2020.

BUILDER LOT GROUP (EAGLES LANDING) – CASE NO. 20-38SV (tabled from November 17, 2020)

Reading of Notice
Commissioner Simon read the public hearing notice to consider the request for a preliminary plat for a 10-lot subdivision to be known as Eagles Landing, and variances from the minimum lot size and width, for the property located at 2655 – 70th Street. 26 notices were mailed.

Presentation of Request
Heather Botten, Associate Planner, explained the request as detailed in the report. She advised that the applicant is proposing to develop a five-acre parcel just west of North Valley Park into 10 new single-family home sites and an additional lot for the existing home. The property is zoned R-1C, single-family residential and is guided Low Density Residential. The LDR designation allows for densities up to four units an acre, and the proposed development is at 2.2 units per acre. The lot sizes range from 10,400 to 46,000 square feet and lot widths range from 65 to 123 feet. The applicant is requesting variances for lot size and width requirements on a number of the lots. The applicant is proposing a 50-foot-wide right-of-way through the development and subsequent to the writing of the report the Fire Marshal has determined that parking would be allowed on one side of

DRAFT

the street. The proposed street would access through the 70th Street right-of-way and then the park would connect off that new road. The Dakota County Plat Commission reviewed the plat and are requesting that the existing residential driveway on Lot 11 be removed from 70th Street and then connect to the new road. The County is also suggesting that the developer consider noise mitigation elements be incorporated into the development to address any noise complaints from 70th Street. The City is not interested in buying the private property and is recommending that the developer pay park dedication fees in lieu of land. The Parks Director commented that noise from pickle ball courts has been an issue in other communities, so he is requesting a discussion with the applicant and the City prior to final plat submittal to discuss how to handle possible future noise issues with the abutting pickle ball courts. The project complies with the R-1C standards relating to setbacks and impervious surface requirements. A tree preservation plan was submitted to the City later this afternoon and upon cursory review it appears that the applicant would be removing about 80% of the significant trees on the property and would have to plant approximately 150 trees to meet the reforestation requirements. A revised landscaping plan will be required with the final plat submittal. There is an infiltration basin on the northeast corner of the property that is designed so that a 100-year storm event would not produce a higher flow rate than what currently exists on the property. The applicant is requesting variances from the minimum lot size and width standards on a number of the lots. While this property is not in the Northwest Area, smaller lot sizes and widths are given flexibility and encouraged to be smaller where needed. The property demonstrates a practical difficulty in that the topographical challenges of the site have resulted in some of the lots not meeting width requirements while others do not meet lot size requirements. No lot needs a variance from both lot size and width standards. The average size of all 11 lots is 16,747 square feet. Staff recommends approval of the request. Staff received three emails that were provided to planning commissioners. One email is from several neighbors on Booth Avenue. Overall, the neighborhood is not in support of the request with the concerns listed in the emails.

Chair Maggi asked for clarification of the ownership of the land.

Ms. Botten replied that the property is owned by Marcus Esparza and the applicant is the Builder Lot Group.

Chair Maggi asked if the land had been owned by that same person for quite some time.

Ms. Botten replied in the affirmative.

Chair Maggi asked for clarification of the existing home.

Ms. Botten advised she was not sure who currently lived in the home but stated the land it sits on is part of the existing parcel.

Chair Maggi asked staff to clarify the proposed access.

Ms. Botten showed where the park drive currently runs over onto the applicant's property. The property is currently not platted so the metes and bounds description shows the property going to the center line of the road. She is not sure of the history of why or how the driveway for the park property goes over onto an easement area on the applicant's private property.

Chair Maggi asked if that was a documented easement.

Ms. Botten replied that they could not find such a document. She explained that the applicant is proposing to construct a road into Eagles Landing that complies with City requirements; the access to the park would come off that new road.

DRAFT

Commissioner Niemioja asked for more information on the proposed infiltration basin.

Jake Moser, Civil Engineer, advised it is an existing low area that would be excavated into a stormwater basin.

Commissioner Wippermann asked what the setbacks would be, including minimum side yard setbacks or separation between houses.

Ms. Botten stated they would be in compliance with the standard R-1C requirements, including a 30' front and rear yard setback and a five-foot side yard setback from accessory structure and 10 foot from a principal structure.

Commissioner Wippermann asked if there was a 15-foot minimum separation as had been done in some other development.

Ms. Botten replied there was not since they were able to comply with the normal R-1C standards.

Commissioner Robertson asked if the two entrances would be overlapped off 70th Street.

Ms. Botten explained that there would be one public street access off of 70th Street into the development and then the park access would be off that public street.

Chair Maggi asked where future additional pickle ball courts would be located.

Ms. Botten replied that according to the Parks Director additional pickle ball courts were not planned for any time soon, but if they were added they would be located southeast of the existing courts. She noted that several parking spaces were added when this area was redone.

Chair Maggi asked if there was space available for additional parking.

Ms. Botten replied that they are not planning to add any additional parking at this time as the Parks Director believes there is adequate parking on the site.

Commissioner Challeen asked what options were available for noise abatement other than a wall.

Ms. Botten stated staff would suggest planting the required 150 additional trees on the south and east sides to help with noise mitigation.

Commissioner Simon asked where the water runoff from the additional impervious surface would flow.

Jake Moser, Civil Engineer, showed the direction the runoff would flow on a map. He advised that the runoff from Booth Avenue should flow down to the proposed stormwater infiltration basin in the northeast portion of the subject site. From there water would discharge into an existing ditch adjacent to the park driveway and then be directed north. They are required to match existing flow rates up to the 100-year storm.

Commissioner Simon asked if they were planning on putting anything on the west side of the proposed development to help catch the runoff or perhaps piping from one catch basin to another.

Mr. Moser replied that the preliminary submittal did not show any rear yard storm sewer, but a condition of approval is that their catch basin spacing meet the maximum spacing requirements. They would potentially have the option to construct side yard swales to direct the water from Booth

DRAFT

Avenue.

Commissioner Simon asked who would oversee the maintenance of the infiltration basin.

Mr. Moser replied that the developer would enter into a Storm Water Facilities Maintenance Agreement with the City, which would detail the maintenance of the infiltration basin.

Commissioner Robertson asked whose responsibility it would be to do noise abatement, if needed would there be space dedicated for the construction of the noise abatement, and what would the impact of the noise abatement on the drainage system. In her opinion noise abatement should be dealt with during the development rather than later.

Ms. Botten clarified that no one is proposing to build a sound wall. They are just having discussions about whether there could be noise issues and possible ways of addressing it, such as installing thicker paned windows, planting trees, or recording an agreement against the property stating that the homeowners are aware they are building next to a park which may have noise associated with it. The City would not be responsible for noise mitigation for the park property. Noise from the pickle ball courts has not been an issue with this park but has been in other communities.

Commissioner Robertson asked for a clearer distinct plan for noise mitigation and whose responsibility it was.

Opening of Public Hearing
Steve Soltau, Builders Lot Group, advised he was available to answer any questions.

Chair Maggi asked the applicant if he read and understood the staff report.

Mr. Soltau replied in the affirmative. In response to an earlier question, Mr. Soltau advised that the property owner lives in the existing home and is planning on staying there. He is subdividing his land into 11 lots, with which will be for his existing home.

Commissioner Simon asked if they had discussed how children would be picked up for school as she assumed a school bus could not turn around in the private cul-de-sac.

Mr. Soltau realized that they had not had a conversation with the transportation company but there was ample room for a bus to turn around. They have also ordered a traffic study and a noise study. Once those are completed, they will talk with staff and address any concerns the studies reveal.

Ms. Botten advised that the cul-de-sac is designed to handle a fire truck so a bus could use the cul-de-sac as well to turn around.

Commissioner Robertson questioned how they would perform a noise study related to pickle ball courts during the months when they were not in use.

Mr. Soltau stated they would take into consideration all noise that would be generated by the park and the roads. He noted that the homes themselves would create additional density and, coupled with additional trees being planted as a buffer, making adjustments to windows may be all that is needed. They will wait to see what the recommendations are going to be.

Chair Maggi asked the applicant what his response would be to the neighbors who state that this neighborhood is not consistent with the larger lots in the adjoining neighborhoods.

DRAFT

Mr. Soltau stated that around the metro lot sizes have gotten smaller as developers try to meet the Metropolitan Council and city guidelines.

Brett and Joy Phares, 6938 Booth Avenue, stated that most of their concerns were addressed in the letter provided to commissioners, but their main concern was the increased traffic from homeowners, trash haulers, delivery trucks, etc. They advised that currently it is unsafe to turn onto Booth Avenue from 70th Street and the additional traffic would only make it worse. The lots were also much smaller than the ones on Booth Avenue and it was confusing why a variance would be granted for these lots when they asked to split their property and were told it would not be allowed as their lot was too small. They noted that they can hear the pickle ball courts from their homes and it can get loud.

Chair Maggi advised the Phares' that commissioners received their letter.

Commissioner Niemioja asked if it was the 70th Street traffic they were most concerned about.

Ms. Phares replied in the affirmative, stating drivers are unaware of Booth Avenue and think they are going all the way to Blaine Avenue, so they don't slow down.

Commissioner Niemioja asked the Phares' when they asked to subdivide their property.

Ms. Phares replied about 15 years ago they called the City and were told their lot was too small to subdivide.

Matt Krumrie, 6914 Booth Avenue, advised that the current owners' parents previously owned the property, stated no other city park allows an entrance to a park road on a neighborhood road, there will be increased traffic because of delivery trucks, food deliveries, homeowners, etc. driving in and out while pickle ball players are entering and exiting the park while cars are parked on both sides of the road. The County expects an increase of 1,000 cars a day on that road between now and 2040, which breaks down to about 50 cars an hour. That road will be much busier and congested. The proposed lots are very small and according to the comprehensive plan new development areas should be compatible in size and scale to existing adjoining neighborhoods. These lots, however, are not compatible in size to anything on Booth Avenue, up the hill, or across 70th Street. The comprehensive plan states that it is important to retain the rural character of the city by protecting and enhancing its natural features. When you enter this park area you feel like you are away from the city and the city should protect these wide-open spaces rather than squeezing in new residential. Everything the city stands for is being minimized with the eight variances being requested. There are too many unanswered questions like where the runoff will go and will the new pond overflow and run into the baseball fields. Other cities have complained about pickle ball noise and it will likely be an issue here as well, and once this is developed the City will never have a chance to buy it to expand the park.

Matt Mikel, 6850 Booth Avenue East, questioned whether there would be room to plant 150 new trees with the minimal amount of land remaining after the houses are built.

Troy McManus, 6836 Booth Avenue, stated that right now the existing trees buffer their homes from the pickle ball courts and he questioned who would replace their windows with thicker panes once the tree buffer was gone. The noise they get now is minimal but if 80% of the trees are removed and replaced with small trees it will be an issue. Also, it is already difficult to get out of Booth Avenue in the morning and it will be even more difficult if this development goes in. He is concerned too about the additional runoff from these homes, stating that in the spring the water comes from this neighborhood, down the road, and into the baseball fields. He agrees with his

DRAFT

neighbors that the proposed lot sizes do not fit in this area, and he questioned why the applicants would get variances when they would not even consider giving him a variance of five feet when he built his house in 2005. All the variances will add stress to the area. The current low area is not a wetland, but he thinks it will become one because of this development and the fact that there is nowhere for the water to run once they start leveling it off. He thinks parking will also be a problem, and he questioned why the additional pickle ball courts that were previously planned for were put on hold.

Marjorie Savage, 6911 Booth Avenue, stated she would like to see a rendering of the proposed homes, stating if they were as tall as they are wide it would look overwhelming and unattractive for the area. She questioned why they would want to set a precedent of smaller lots.

Mr. Soltau pointed out that this application complies with both the zoning code and future land use plan in regard to density; in fact, what they are proposing is almost half what is allowed.

Ms. Botten advised that Mr. Soltau was having technical issues, but she believed he was trying to say that the comprehensive plan allows up to four units per acre, which would result in 20 potential lots on this property. The applicant is proposing 11.

Commissioner Simon noted that although a certain density is planned for, the comprehensive plan does not take topography, etc. into account for each specific lot. In many areas the allowed density would not be possible because of steep hills, etc.

Ms. Botten replied that is why they are proposing 10 new sites rather than 20. She stated there could potentially be some reconfiguration of Lot 5 to reduce the number of variances needed, but it would result in unusual property lines and would not change the number of houses that would be there.

Ms. Botten stated that she believed Mr. Soltau was also trying to make the point that originally their submittal was for 15 lots. After the neighborhood meeting, they reduced the number of lots to 10 new lots plus the one existing home.

Melvin Moore, Builder Lot Group, agreed that after the neighborhood meeting, they went back and had a conversation with the homeowners, and they agreed to make adjustments to allow fewer lots to work towards the goal of being sensitive of everyone's needs.

Commissioner Weber asked if staff knew what the right-of-way number was that runs in front of this property on 70th Street as he was trying to understand why the right-of-way was so unusual.

Ms. Botten advised that it is County right-of-way, not City, but she does not know the history of how the park property had the road installed where it was.

Mr. Moore advised that he employed someone from Assure Title to research that issue and to date they have not been able to find any recorded easements. It looks like it remains part of the property that was owned and is owned by the current owner.

Commissioner Simon asked if they would have perhaps moved that over to the entrance road because of topography.

Mr. Soltau replied it was moved to the current location so it would line up with the street south of 70th Street. They have not been able to locate the easement itself, but it is not a problem that it is routed that way. The County is just looking for it to have a single point of access on 70th Street and a full public street width. He advised that while he was having technical difficulties, he was able to

DRAFT

hear that Ms. Botten addressed both of the points he was trying to make.

Chair Maggi closed the public hearing.

Planning Commission Discussion

Chair Maggi stated this seems to be a situation where a piece of land has been sitting vacant for quite some time and the owner is now trying to use it within reasonable means. In her opinion this would bring some graduation from the size of the neighboring properties and moving into the park. She asked if the existing house needing to change their driveway should be listed in the conditions.

Ms. Botten replied that it could be listed, but it would be addressed at the County level.

Chair Maggi agreed with staff's suggestion of having homeowners sign an agreement stating they are aware they are building next to a park which will likely be noisy.

Commissioner Niemioja stated she understood the neighbors not wanting to see this piece of land be developed, they also had to balance the rights of the property owner to utilize their property. If this property owner is trying to reasonably use their property under the guiding principles and the zoning code the City has to respect that; however, they can control it somewhat. They cannot take away the property right of an owner without compensating them. If the City is not going to buy this land, and the Booth Avenue neighbors are not going to purchase this land, she would not vote to take away this property owner's right in this case without compensation. Perhaps the parks department needs to give this park more attention and maybe the police should get more involved in monitoring who is parking on the street in that park. People using the park should also feel free to contact the parks department when there are issues. She has found them very responsive. She noted that this is only the preliminary plat, and many specifics would be discussed before final approval. She also agreed that there should be some sort of clause saying homeowners are aware of the property's proximity to the park and they recognize there are adverse effects associated with a park. Regarding the noise concerns of the Booth Avenue residents, she believes the noise ordinance would protect them from that. She disagreed that these lot sizes were totally out of character for the neighborhood, stating the homes on Blake Path, in the same zoning district as this development, were around 12,000 square feet in size. Lastly, she questioned whether the city encouraging smaller lots where needed was a viable practical difficulty.

Commissioner Clancy stated he has personally witnessed the parking and backup along the street as well and agreed that they should look into some sort of enforcement, such as a fire lane, or sign posting. He reiterated that this was just the preliminary plat and further information would be divulged regarding noise, variances, drainage, etc. Lastly, he would like to see more information regarding the traffic report and whether it includes any information that might warrant further investigation into traffic coming in and out of these areas. At this point he would likely vote in favor of moving this forward.

Commissioner Challeen stated the reason this is before the Planning Commission for a variance is due to the lot size and width. She would prefer for there to be fewer homes so it could comply with lot size and width requirements, so no variance is needed. She would not be voting in favor of this request.

Commissioner Robertson stated she had significant concerns around noise. She advised that one of her family members purchased a home in March. In the spring they heard gunshots and discovered they were near a gun range. It ended up requiring legal action. Even if someone signs a paper acknowledging they are near a park, until they live it in the spring it is just words on paper. In her opinion the language in the conditions is much too vague for her to feel confident that people buying here have guaranteed noise relief or who would be responsible for it. She could not vote in

DRAFT

favor of the request until that issue was addressed.

Chair Maggi asked if Commissioner Robertson was saying she would want a condition added that a noise abatement plan was provided prior to final plat.

Commissioner Robertson replied that a detailed noise abatement plan was built into the final plat.

Commissioner Kramer stated he is familiar with this area and at first questioned how they would fit 10 new lots into the proposed location. However, after looking into it more, and knowing that it complies with the zoning density requirements, he is in favor of the general concept. He stated if the proposed street was straight it would actually look very similar to how Booth Avenue is laid out. He sympathizes with the residents on Booth Avenue and understands that the lot sizes are smaller than those on Booth. He did not see a practical difficulty; however, saying the stated one was weak.

Chair Maggi asked if anyone had thoughts on a practical difficulty for the requested variances on lot size and width.

Commissioner Niemioja suggested the challenging topography be part of the practical difficulty and stated she was in favor of the plat but would not support it unless a viable practical difficulty was determined.

Ms. Botten noted that topography has been used in the past as a practical difficulty.

Commissioner Weber stated that the proposed lot widths are similar to the neighborhood to the south and some of the lots on Booth Avenue, so he suggested the practical difficulty being that it was not out of character of the surrounding properties and topographical challenges.

Chair Maggi asked if there were additional conditions the planning commission wanted to add besides a final review of the traffic study, a noise abatement plan, and some notification to purchasers that they are buying a lot next to a park that would likely have associated noise.

Commissioner Simon asked if a noise study should be required as well.

Chair Maggi replied that the challenge is that there is no pickle ball at this time of year.

Planning Commission Recommendation
Motion by Commissioner weber, second by Commissioner Clancy, to approve the request for a preliminary plat for a 10-lot subdivision to be known as Eagles Landing, and variances from the minimum lot size and width, for the property located at 2655 – 70th Street, with the conditions listed in the report and additional Condition 15 that a traffic study be done to gain a better understanding of how this development will impact 70th Street traffic and Condition 16 requiring a noise abatement plan, with the practical difficulty being the topographical challenges and the proposed lot sizes not being completely out of character for the neighborhood.

Motion carried (7/2 – Challeen, Robertson). This item goes to the City Council on December 14, 2020.

RON CLARK CONSTRUCTION – CASE NO. 20-43ZSC

Reading of Notice
Commissioner Simon read the public hearing notice to consider the request for a preliminary plat

for a two-lot subdivision and a rezoning of a portion of the property from P, Public to R-3C, Multiple-Family Residential, and a conditional use permit (CUP) for a 49-unit apartment building, a CUP to exceed the maximum height for a structure, and variances from minimum lot size for a church property, for the property located at 5590 Babcock Trail. 17 notices were mailed.

Presentation of Request

Allan Hunting, City Planner, explained the request as detailed in the report. He advised that the applicant is requesting to rezone the apartment portion of the lot to R-3C, Multi-Family Residential. The property is currently one lot and contains the existing church, parking area, and the cemetery. The applicants are requesting to subdivide the property into two lots. The new boundary would split the lot between the apartment building lot and the church lot. Right-of-way would be dedicated along Babcock Trail, which is a County road, and would bring the total size of Lot 1 below the three acres required for a church in the Public/Institutional zoning district. The applicant is also requesting two CUP's to allow for a 49-unit multiple-family apartment building and to allow for a building height of 46.6 feet. Buildings are typically measured from the first floor to the mid-point of the roof. In this case the lowest floor elevation is exposed by more than 50% so that brings the height to 46.6 feet. Buildings over 35 feet in height require a CUP. The access point will be shared by the church and the apartment building. They will essentially have their own parking lots. Because the two parking lots overflow into each other there is not an actual setback from property lines so technically it requires a variance. They are requesting a variance to allow 23.4% building coverage whereas 20% is allowed, and also a variance to allow 54.7% impervious surface coverage whereas 40% is allowed. The applicant hired a consultant to do a traffic study. The study found no negative impacts to the intersection points and did not find the need for additional roadway improvements. The stormwater pond is proposed on the back side of the fire station lot, and the city engineer supports its design as it will help improve stormwater drainage for other lots in the area as well. Staff recommends approval of the project, which is providing workforce housing which is a goal of the Housing Chapter of the Comprehensive Plan, and they are trying to develop some underutilized land on a church site which warrants some flexibility from some of the code standards.

Commissioner Weber asked if this was a legal non-conforming cemetery.

Mr. Hunting replied that a cemetery is allowed in the Public/Institutional zoning district and its configuration would be considered grandfathered in.

Commissioner Weber asked if they verified setbacks from the closest burial plot.

Mr. Hunting replied there are no City requirements for setback from burial sites, but this was quite a distance from any of the markers.

Commissioner Simon asked if staff heard from any neighbors other than the one email they received.

Mr. Hunting replied they had not.

Commissioner Robertson asked for confirmation that the proposed church site would be under three acres in size.

Mr. Hunting replied in the affirmative, stating once the County has made a final determination on how much additional right-of-way they want it will bring the lot to under three acres.

Commissioner Robertson asked if falling under the three-acre size would impact the church's tax-exempt status.

DRAFT

Mr. Hunting replied that the three-acre minimum was a city requirement and likely would not impact their tax-exempt status.

Opening of Public Hearing
Mike Waldo, Ron Clark Construction, 7500 W. 78th Street, Edina, advised he was available to answer any questions.

Chair Maggi asked the applicant if he read and understood the report.

Mr. Waldo replied in the affirmative. He advised that they held a neighborhood meeting, which a representative from CHS attended. They also had a voicemail exchange with the HealthPartners clinic, who was supportive of their request. They also spoke with the author of the email, Ms. Platek, about traffic and the fact that the study shows this project's effect would be minimal. Her perception is that it has a negative effect on her. Ms. Platek was the only neighbor they heard from on this application and only one person spoke at the planning commission meeting for the comprehensive plan amendment. The church is comfortable with their setbacks from the burial sites. The County is working with the church on the right-of-way as the amount they want to take is encroaching onto a couple burial sites. The biggest concerns with the previous comprehensive plan amendment were traffic and access. The traffic study clearly states that this is a small enough building that it would not negatively affect the nearby intersections and they were able to move the access further east. Like any four-lane road there will be times when drivers are not able to get out immediately, but it should access well in normal situations. The traffic study also shows that over the last five years the peak demands of an apartment building in AM and PM are reduced because the average apartment dweller has a more diverse schedule than single-family residential.

Commissioner Simon asked for clarification of the location and height of a retaining wall by the underground parking back to the infiltration pond.

Mr. Waldo advised that there is a small retaining wall as you drive down to the underground garage and an additional wall leading to the pond. Mr. Waldo was not sure of the heights but stated a portion of the wall was fairly tall as it gets towards the drainage basin.

Commissioner Simon stated she was more concerned about the wall going into the underground parking lot and the ability to keep an eye on people going in and out.

Mr. Waldo advised they have video surveillance of the garage area.

Chair Maggi closed the public hearing.

Planning Commission Discussion
Commissioner Niemioja acknowledged that the neighbor who wrote the email lived on a busy corner, but she does not see traffic as an issue that would preclude her from voting for this development. She did not believe the apartment building would be nearly as impactful to traffic as the school on Babcock or future developments further north. She also noted that the traffic study was supportive of this development as well.

Planning Commission Recommendation
Motion by Commissioner Weber, second by Commissioner Wippermann, to approve the request for a preliminary plat for a two-lot subdivision and a rezoning of a portion of the property from P, Public to R-3C, Multiple-Family Residential, and a conditional use permit (CUP) for a 49-unit apartment building, a CUP to exceed the maximum height for a structure, and variances from minimum lot size for a church property, for the property located at 5590 Babcock Trail, with the

DRAFT

conditions listed in the report.

Motion carried (9/0). This item geos to the City Council on December 14, 2020.

OTHER

City of Inver Grove Heights – Case No. 20-47X
Allan Hunting, City Planner, asked the Planning Commission to review the expenditures for a drainage plan on Carleda Way and Cahill Avenue for its consistency with the comprehensive plan. Staff believes the proposed expenditure is consistent with comprehensive plan.

Motion by Commissioner Wippermann, second by Commissioner Weber, the recommend that City Project No. 2016-13 is consistent with the comprehensive plan.

Motion carried (9/0).

Mr. Hunting advised that the December 15, 2020 Planning Commission meeting has been cancelled.

The meeting was unanimously adjourned at 9:37 p.m.

Respectfully submitted,

Kim Fox
Recording Secretary

DRAFT

P L A N N I N G R E P O R T
CITY OF INVER GROVE HEIGHTS

CASE NO: 21-04X

MEETING DATE: January 5, 2021

APPLICANT: City of Inver Grove Heights

PROPERTY OWNER: N/A

REQUEST: Review of Capital Expenditure associated with road reconstruction projects

LOCATION: N/A

COMPREHENSIVE PLAN: N/A

ZONING: N/A

REVIEWING DIVISIONS: Planning
Engineering

PREPARED BY: Allan Hunting
City Planner

BACKGROUND

The Engineering Department is requesting the Planning Commission review the following capital improvement projects for consistency with the 2040 Comprehensive Plan. The projects are:

2020-09D – Delaney Circle and Delaney Court Improvements

The project consists of partial street reconstruction. A memo from Jake Moser, Civil Engineer is attached providing details and location of the project.

Per State Statures, the Planning Commission must review capital improvement projects for consistency with the Comprehensive Plan (Minnesota Statute 462.356 subd. 2).

EVALUATION OF THE REQUEST

Compliance with the Comprehensive Plan. Minnesota Statutes requires the Planning Commission to review capital improvement projects to verify they are in compliance with the City's Comprehensive Plan.

The capital improvement project would fall under the Transportation chapter of the comprehensive plan since it references streets in the city. While the comp plan does not get into details of street maintenance and reconstruction, the capital improvement costs to maintain streets would not be inconsistent with the plan.

ALTERNATIVES

A. **Approval**. If the Planning Commission finds the request acceptable, the following actions should take place:

An Approval recommendation that City Project 2020-09D is consistent with the Comprehensive Plan.

B. **Denial**. If the Planning Commission does not find the proposed project consistent with the Comprehensive Plan, the above request should be recommended for denial. With a recommendation for denial, findings or the basis for the denial should be given.

RECOMMENDATION

The Engineering Department and Planning Staff both recommend the capital expenditure be found consistent with the Comprehensive Plan.

Attachment: Memo from Jake Moser, Civil Engineer

MEMO

CITY OF INVER GROVE HEIGHTS

TO: Allan Hunting, City Planner

FROM: Jake Moser, Civil Engineer

DATE: December 16, 2020

SUBJECT: Planning Commission Meeting on January 5, 2021
Comprehensive Plan Review
City Project No. 2020-09D
2020-09D - Delaney Circle and Delaney Court Improvements

At the December 14, 2020 City Council meeting, the City Council received the feasibility report and scheduled a Public Improvement Hearing for City Project No. 2020-09D - Delaney Circle and Delaney Court Improvements. The Public Improvement Hearing is scheduled for January 25, 2020. This project will include partial reconstruction of pavement and base aggregate. The rural street section with drainage ditches will be maintained.

The Planning Commission should review the project to ensure it is consistent with the City's Comprehensive Plan.

JDM
Attachments: Project Map

cc: Scott D. Thureen, Public Works Director
Thomas J. Kaldunski, City Engineer
Steve W. Dodge, P.E., Assistant City Engineer
Bridget McCauley Nason, City Attorney

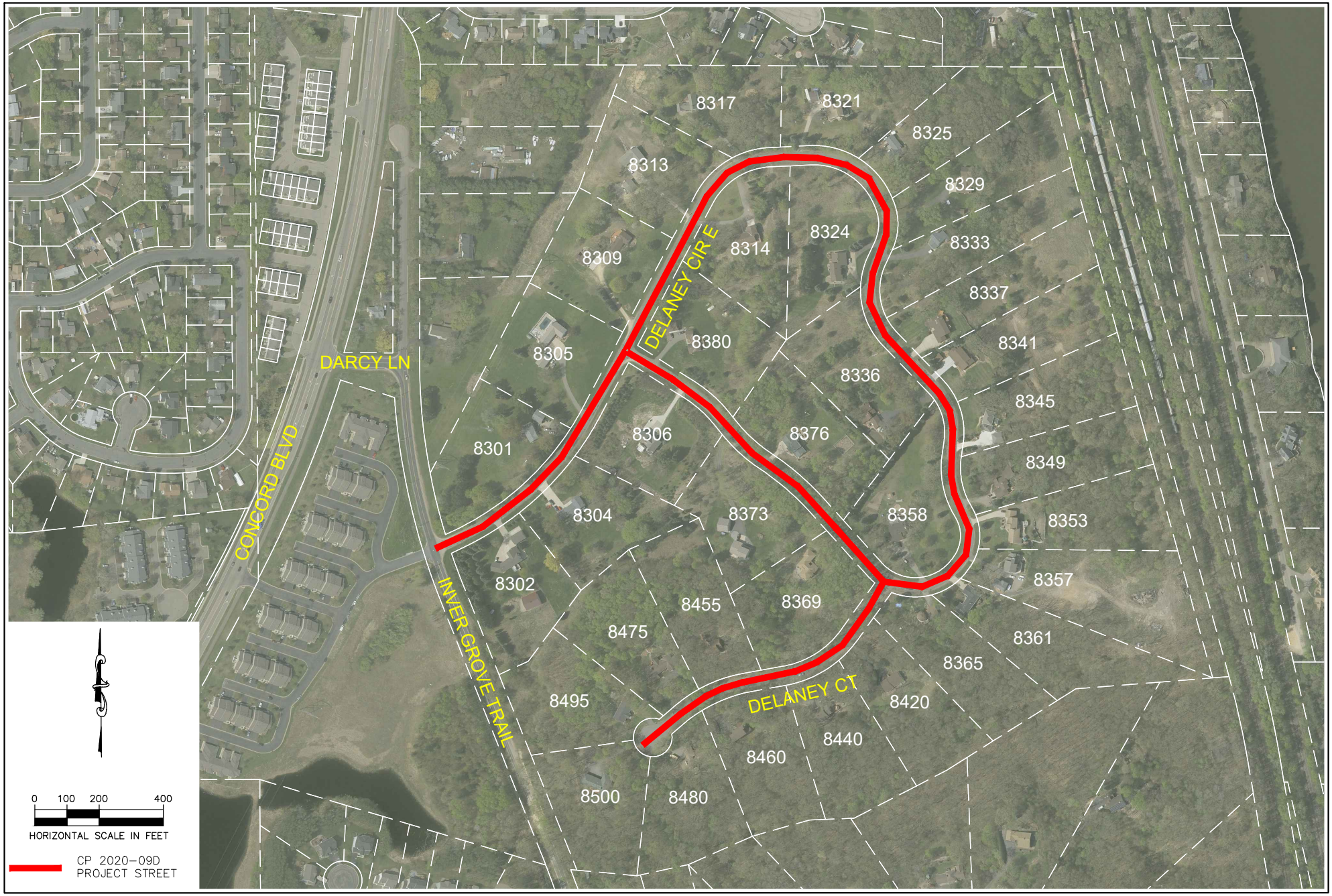

K:\TWC_Civil\City\IGH\DELANEY CIRCLE\CAD\Plan Sheets\Exhibits\Delaney_Project Area.dwg October 14, 2020 - 7:39am

Kimley»Horn
767 EUSTIS STREET, SUITE 100, ST. PAUL, MN 55114
PHONE: 651-645-4197
WWW.KIMLEY-HORN.COM

City of
Inver Grove Heights
8150 BARBARA AVENUE
INVER GROVE HEIGHTS, MN 55077-3412

PROJECT LOCATION MAP

DELANEY CIRCLE AND DELANEY COURT IMPROVEMENTS
CITY PROJECT 2020-09D

P L A N N I N G R E P O R T
CITY OF INVER GROVE HEIGHTS

CASE NO: 21-05X

MEETING DATE: January 5, 2021

APPLICANT: City of Inver Grove Heights

PROPERTY OWNER: N/A

REQUEST: Review of Capital Expenditure associated with utility improvements

LOCATION: N/A

COMPREHENSIVE PLAN: N/A

ZONING: N/A

REVIEWING DIVISIONS: Planning
Engineering

PREPARED BY: Allan Hunting
City Planner

BACKGROUND

Engineering is working on City Project No. 2021-03 NWA Emergency Pumping Systems and Force Main Improvements for Regional Basins EP-027A and EP-034.

Assistant City Engineer Steve Dodge has prepared a brief memo with maps illustrating the improvements.

Per State Statures, the Planning Commission must review capital improvement projects for consistency with the Comprehensive Plan (Minnesota Statute 462.356 subd. 2).

EVALUATION OF THE REQUEST

Compliance with the Comprehensive Plan. Minnesota Statutes requires the Planning Commission to review capital improvement projects to verify they are in compliance with the City's Comprehensive Plan.

The capital improvement project would fall under the Surface Water Management chapter of the comprehensive plan. The project would be consistent with the 2040 comp plan.

ALTERNATIVES

A. **Approval**. If the Planning Commission finds the request acceptable, the following actions should take place:

- An Approval recommendation that City Project No. 2021-03 NWA Emergency Pumping Systems and Force Main Improvements for Regional Basins EP-027A and EP-034is consistent with the Comprehensive Plan.

B. **Denial**. If the Planning Commission does not find the proposed project consistent with the Comprehensive Plan, the above request should be recommended for denial. With a recommendation for denial, findings or the basis for the denial should be given.

RECOMMENDATION

The Engineering Department and Planning Staff both recommend the capital expenditure be found consistent with the Comprehensive Plan.

Attachment: Memo from Steve Dodge, Assistant City Engineer

MEMO

CITY OF INVER GROVE HEIGHTS

TO: Allan Hunting, City Planner

FROM: Steve W. Dodge, P.E., Assistant City Engineer SWD

DATE: January 5, 2021 Planning Commission Meeting

SUBJECT: Comprehensive Plan Review
NWA Emergency Pumping Systems and Force Main Improvements
for Regional Basins EP-027A and EP-034
City Project No. 2021-03

At the December 14, 2020 regular meeting, City Council received the feasibility report for City Project No. 2021-03 NWA Emergency Pumping Systems and Force Main Improvements for Regional Basins EP-027A and EP-034 and scheduled the Public Improvement Hearing for January 11, 2021. The location is within the Canvas of IGH development in the northeast quadrant of TH 3 (Robert Trail South) and CR 26 (70th Street). This project will include construction of storm water emergency overflow system improvements to include an emergency pumping system, concrete pad area for portable pumps, force main and appurtenances in regional basins EP-027A and EP-034 within the Canvas development. The emergency overflow conveyance system is part of the Robert Watershed Corridor Study for the Northwest Area. The system estimate cost is $610,300 and will be funded by Fund 448 - NWA Storm Water and developer funds.

The Planning Commission should review the project to ensure it is consistent with the City's Comprehensive Plan.

SWD/sd
Attachments: Project Exhibits – Options A & B

cc: Scott D. Thureen, Public Works Director
Thomas J. Kaldunski, City Engineer
Bridget McCauley Nason, City Attorney
Todd Shoemaker, Project Manager, Wenck & Associates

Layout A: Basin EP-027A & Basin EP-034, Option A Conveyance

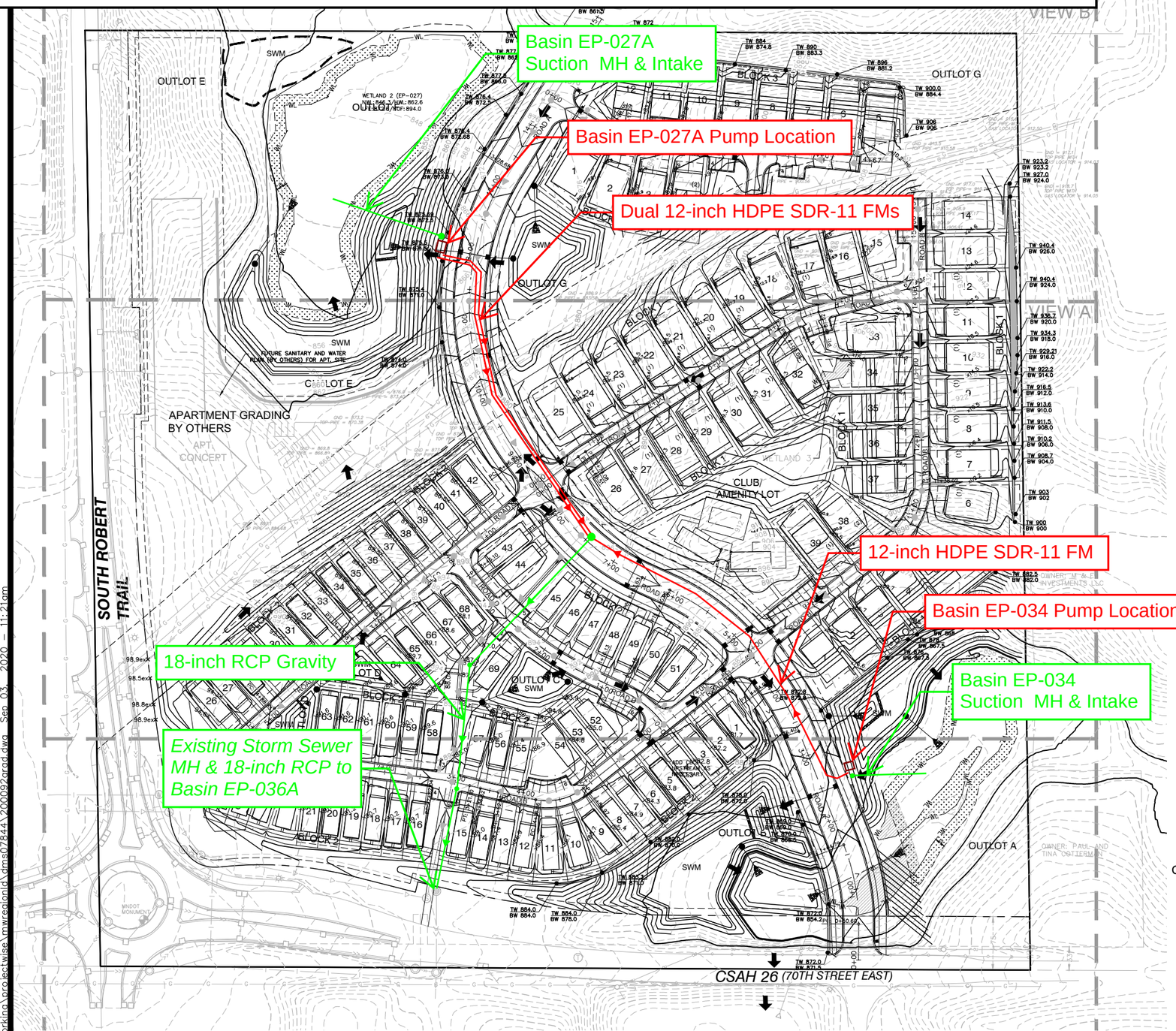

Forcemain

Gravity

GRADING NOTES:

1. ALL FINISHED GRADES SHALL SLOPE AWAY FROM PROPOSED BUILDINGS AT MINIMUM GRADE OF 2.0%. ALL SWALES SHALL HAVE A MINIMUM SLOPE OF 2.0%.
2. THE CONTRACTOR SHALL KEEP THE ADJACENT ROADWAYS FREE OF DEBRIS AND PREVENT THE OFF-SITE TRACKING OF SOIL IN ACCORDANCE WITH THE REQUIREMENTS OF THE CITY AND WATERSHED.
3. NOTIFY GOPHER STATE ONE CALL, AT (800)252-1166, 48 HOURS PRIOR TO START OF CONSTRUCTION.
4. ALL IMPROVEMENTS TO CONFORM WITH CITY OF INVER GROVE HEIGHTS CONSTRUCTION STANDARDS SPECIFICATION, LATEST EDITION.
5. ROCK CONSTRUCTION ENTRANCES SHALL BE PROVIDED AT ALL CONSTRUCTION ACCESS POINTS.
6. REFER TO GEOTECHNICAL REPORT AND PROJECT MANUAL, FOR SOIL CORRECTION REQUIREMENTS AND TESTING REQUIREMENTS.
7. STRIP TOPSOIL PRIOR TO ANY CONSTRUCTION. REUSE STOCKPILE ON SITE. STOCKPILE PERIMETERS MUST BE PROTECTED WITH SILT FENCE.
8. PRIOR TO STARTING CONSTRUCTION, THE CONTRACTOR SHALL BE RESPONSIBLE TO MAKE SURE THAT ALL REQUIRED PERMITS AND APPROVALS HAVE BEEN OBTAINED. NO CONSTRUCTION OR FABRICATION SHALL BEGIN UNTIL THE CONTRACTOR HAS RECEIVED AND THOROUGHLY REVIEWED ALL PLANS AND OTHER DOCUMENTS APPROVED BY ALL OF THE PERMITTING AUTHORITIES.
9. IMMEDIATELY FOLLOWING GRADING OF (3:1 OR GREATER) SIDE SLOPES AND DRAINAGE SWALES, WOOD FIBER BLANKET OR OTHER APPROVED SOIL STABILIZING METHOD (APPROVED BY ENGINEER) SHALL BE APPLIED OVER APPROVED SEED MIXTURE AND A MINIMUM OF 4" TOPSOIL.
10. THE GENERAL CONTRACTOR MUST DISCUSS DEWATERING PLANS WITH ALL SUBCONTRACTORS TO VERIFY NPDES REQUIREMENTS. IF DEWATERING IS REQUIRED DURING CONSTRUCTION, CONTRACTOR SHOULD CONSULT WITH EROSION CONTROL INSPECTOR AND ENGINEER TO DETERMINE APPROPRIATE METHOD.
11. REFER TO EROSION CONTROL PLAN FOR ALL EROSION AND SEDIMENT CONTROL DEVICE LOCATIONS.

RETAINING WALL NOTES:

RETAINING WALL MASS GRADING PREPARATION

1. ALL RETAINING WALLS SHALL BE ROUGH GRADED AT A 2:1 SLOPE WITH BASE OF SLOPE AT PROPOSED WALL FACE.
2. THE RETAINING WALL SLOPE AREAS ARE TO BE MAINTAINED UNTIL RETAINING WALL CONSTRUCTION OCCURS. ANY EROSION SHALL BE REMEDIED AND RESTORED.
3. BUILDING PERMITS ARE REQUIRED FOR ALL RETAINING WALLS 4 FEET IN HEIGHT OR GREATER AND THE WALLS SHALL BE DESIGNED BY A STRUCTURAL ENGINEER WITH DESIGN REVIEWED AND APPROVED BY THE CITY PRIOR TO INSTALLATION. ANY QUESTIONS REGARDING THE BUILDING PERMITS SHALL BE DIRECTED TO THE CITY BUILDING INSPECTOR.
4. INSTALL SAFETY RAILING ATOP ALL WALLS WHERE REQUIRED BY CODE.
5. RETAINING WALL CONTRACTOR AND/OR RETAINING WALL STRUCTURAL ENGINEER ARE RESPONSIBLE TO REVIEW CIVIL SITE ENGINEERING DRAWINGS. ANY OBSERVED CONCERNS WITH CIVIL SITE ENGINEERING DESIGN ELEMENTS RELATED TO RETAINING WALLS THAT REQUIRE MODIFICATIONS TO THE CIVIL SITE DESIGN IS THEIR RESPONSIBILITY TO COORDINATE WITH PROJECT OWNER AND CIVIL SITE ENGINEER. IF NO COORDINATION IS REQUESTED IT SHALL BE UNDERSTOOD THAT ALL CONDITIONS WITHIN THE CIVIL SITE DESIGN AND PLANS ARE ACCEPTABLE AND ABLE TO BE PROVIDED FOR IN THE RETAINING WALL DESIGN AND CONSTRUCTION.
6. RETAINING WALLS ARE TO BE FINAL DESIGNED AND PERMITTED BY OTHERS.

COLLECTOR ROAD

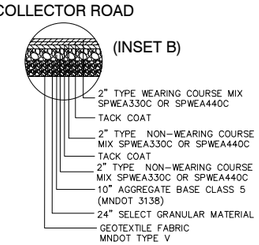

CONCRETE SIDEWALK

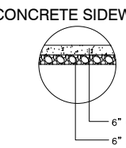

PRIVATE ROAD

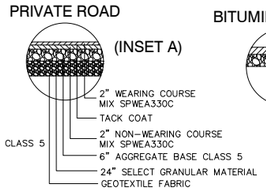

BITUMINOUS TRAIL

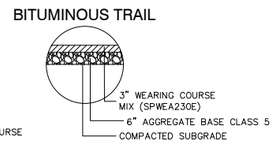

PAVEMENT SECTIONS

NOT TO SCALE

GRADING LEGEND:

789	EXISTING CONTOUR
789	PROPOSED CONTOUR
	PROPOSED RETAINING WALL
x62.44 x962.44	PROPOSED TC, CL ELEVATION
x62.4 x962.4	PROPOSED SPOT ELEVATION
1.0%	DIRECTION OF DRAINAGE
	EMERGENCY OVERFLOW ROUTING
	PROPOSED CATCH BASINS
>	PROPOSED STORM SEWER
TW 70.0 BW 66.0	TOP OF WALL ELEVATION BOTTOM OF WALL ELEVATION
	PROPERTY LINE
	LOT LINE
	EASEMENT LINE
>>	EOF ROUTING

FOR REVIEW ONLY
PRELIMINARY
NOT FOR CONSTRUCTION

N

0 40 80 160
SCALE IN FEET

ALLIANT
733 Marquette Avenue
Suite 700
Minneapolis, MN 55402
612.758.3080
www.alliant-inc.com

CANVAS AT INVER GROVE HEIGHTS
INVER GROVE HEIGHTS, MINNESOTA
PRELIMINARY PLAT AND PUD SUBMITTAL
GRADING AND DRAINAGE PLAN

I hereby certify that this plan, specification, or report was prepared by me or under my direct supervision and that I am a duly Licensed PROFESSIONAL ENGINEER under the laws of the State of MINNESOTA

MARK RAUSCH, PE

Date License No.

QUALITY ASSURANCE/CONTROL

BY	DATE

DATE	ISSUE
8-17-2020	CITY SUBMITTAL
9-3-2020	CITY COMMENTS UPDATES

PROJECT TEAM DATA

DESIGNED:	MPR
DRAWN:	TAS
PROJECT NO:	220-0092

10

SHEET 10 OF 34

Drawing name: C:\pw_working\projectwise\mwrecion1\dms07844\200092grad.dwg Sep 03, 2020 - 11:21am

Layout B: Basin EP-027A & Basin EP-034, Option B Conveyance

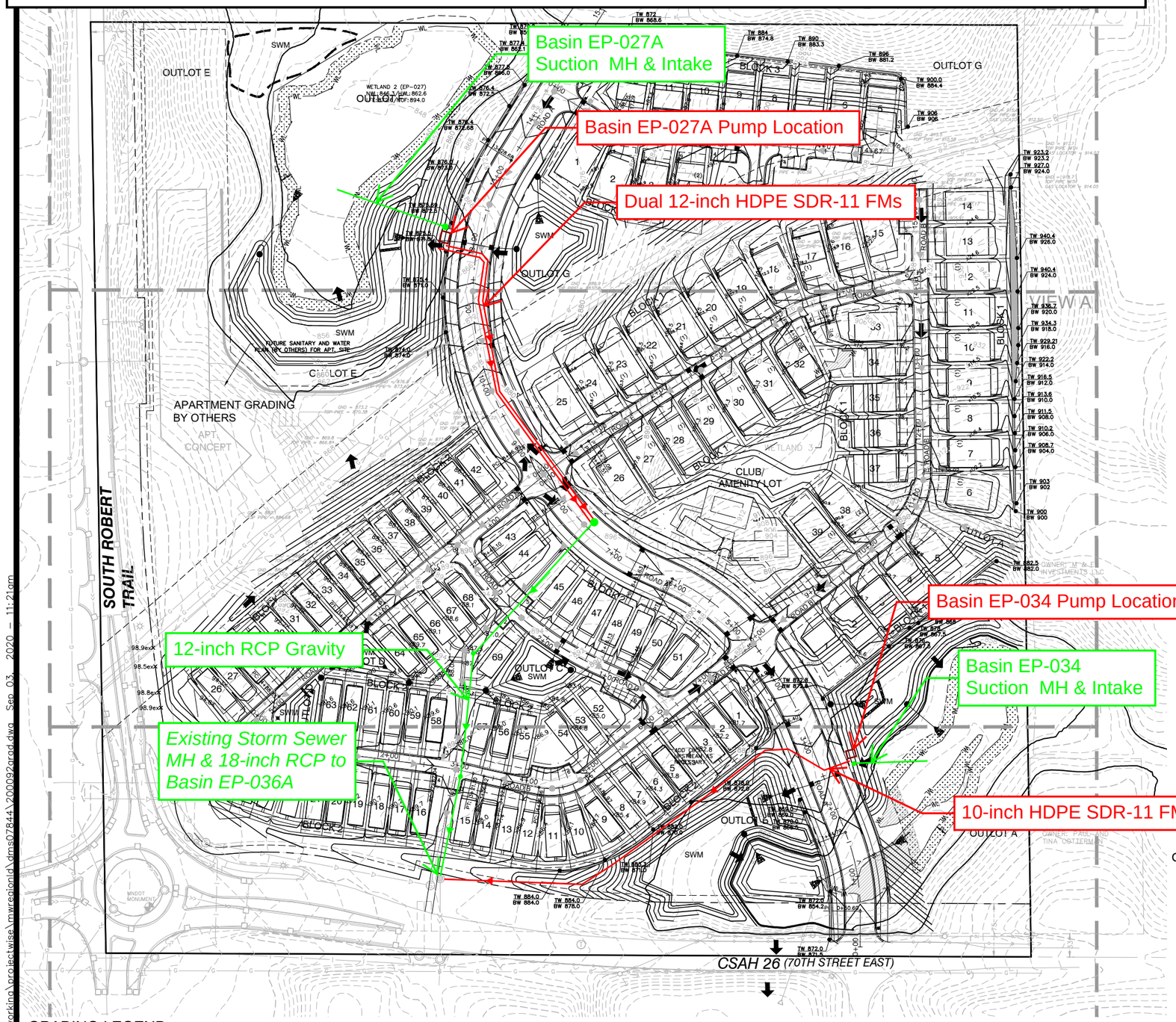

Forcemain

Gravity

GRADING NOTES:

1. ALL FINISHED GRADES SHALL SLOPE AWAY FROM PROPOSED BUILDINGS AT MINIMUM GRADE OF 2.0%. ALL SWALES SHALL HAVE A MINIMUM SLOPE OF 2.0%.
2. THE CONTRACTOR SHALL KEEP THE ADJACENT ROADWAYS FREE OF DEBRIS AND PREVENT THE OFF-SITE TRACKING OF SOIL IN ACCORDANCE WITH THE REQUIREMENTS OF THE CITY AND WATERSHED.
3. NOTIFY GOPHER STATE ONE CALL, AT (800)252-1166, 48 HOURS PRIOR TO START OF CONSTRUCTION.
4. ALL IMPROVEMENTS TO CONFORM WITH CITY OF INVER GROVE HEIGHTS CONSTRUCTION STANDARDS SPECIFICATION, LATEST EDITION.
5. ROCK CONSTRUCTION ENTRANCES SHALL BE PROVIDED AT ALL CONSTRUCTION ACCESS POINTS.
6. REFER TO GEOTECHNICAL REPORT AND PROJECT MANUAL, FOR SOIL CORRECTION REQUIREMENTS AND TESTING REQUIREMENTS.
7. STRIP TOPSOIL PRIOR TO ANY CONSTRUCTION. REUSE STOCKPILE ON SITE. STOCKPILE PERIMETERS MUST BE PROTECTED WITH SILT FENCE.
8. PRIOR TO STARTING CONSTRUCTION, THE CONTRACTOR SHALL BE RESPONSIBLE TO MAKE SURE THAT ALL REQUIRED PERMITS AND APPROVALS HAVE BEEN OBTAINED. NO CONSTRUCTION OR FABRICATION SHALL BEGIN UNTIL THE CONTRACTOR HAS RECEIVED AND THOROUGHLY REVIEWED ALL PLANS AND OTHER DOCUMENTS APPROVED BY ALL OF THE PERMITTING AUTHORITIES.
9. IMMEDIATELY FOLLOWING GRADING OF (3:1 OR GREATER) SIDE SLOPES AND DRAINAGE SWALES, WOOD FIBER BLANKET OR OTHER APPROVED SOIL STABILIZING METHOD (APPROVED BY ENGINEER) SHALL BE APPLIED OVER APPROVED SEED MIXTURE AND A MINIMUM OF 4" TOPSOIL.
10. THE GENERAL CONTRACTOR MUST DISCUSS DEWATERING PLANS WITH ALL SUBCONTRACTORS TO VERIFY NPDES REQUIREMENTS. IF DEWATERING IS REQUIRED DURING CONSTRUCTION, CONTRACTOR SHOULD CONSULT WITH EROSION CONTROL INSPECTOR AND ENGINEER TO DETERMINE APPROPRIATE METHOD.
11. REFER TO EROSION CONTROL PLAN FOR ALL EROSION AND SEDIMENT CONTROL DEVICE LOCATIONS.

RETAINING WALL NOTES:

RETAINING WALL MASS GRADING PREPARATION

1. ALL RETAINING WALLS SHALL BE ROUGH GRADED AT A 2:1 SLOPE WITH BASE OF SLOPE AT PROPOSED WALL FACE.
2. THE RETAINING WALL SLOPE AREAS ARE TO BE MAINTAINED UNTIL RETAINING WALL CONSTRUCTION OCCURS. ANY EROSION SHALL BE REMEDIED AND RESTORED.
3. BUILDING PERMITS ARE REQUIRED FOR ALL RETAINING WALLS 4 FEET IN HEIGHT OR GREATER AND THE WALLS SHALL BE DESIGNED BY A STRUCTURAL ENGINEER WITH DESIGN REVIEWED AND APPROVED BY THE CITY PRIOR TO INSTALLATION. ANY QUESTIONS REGARDING THE BUILDING PERMITS SHALL BE DIRECTED TO THE CITY BUILDING INSPECTOR.
4. INSTALL SAFETY RAILING ATOP ALL WALLS WHERE REQUIRED BY CODE.
5. RETAINING WALL CONTRACTOR AND/OR RETAINING WALL STRUCTURAL ENGINEER ARE RESPONSIBLE TO REVIEW CIVIL SITE ENGINEERING DRAWINGS. ANY OBSERVED CONCERNS WITH CIVIL SITE ENGINEERING DESIGN ELEMENTS RELATED TO RETAINING WALLS THAT REQUIRE MODIFICATIONS TO THE CIVIL SITE DESIGN IS THEIR RESPONSIBILITY TO COORDINATE WITH PROJECT OWNER AND CIVIL SITE ENGINEER. IF NO COORDINATION IS REQUESTED IT SHALL BE UNDERSTOOD THAT ALL CONDITIONS WITHIN THE CIVIL SITE DESIGN AND PLANS ARE ACCEPTABLE AND ABLE TO BE PROVIDED FOR IN THE RETAINING WALL DESIGN AND CONSTRUCTION.
6. RETAINING WALLS ARE TO BE FINAL DESIGNED AND PERMITTED BY OTHERS.

COLLECTOR ROAD

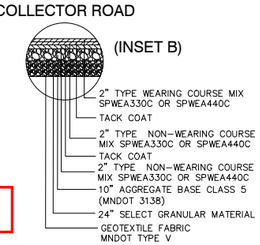

CONCRETE SIDEWALK

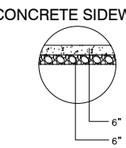

PRIVATE ROAD

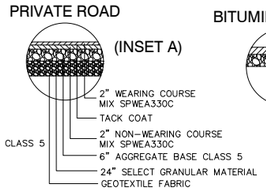

BITUMINOUS TRAIL

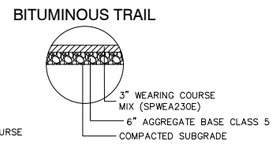

PAVEMENT SECTIONS

NOT TO SCALE

GRADING LEGEND:

789	EXISTING CONTOUR
789	PROPOSED CONTOUR
	PROPOSED RETAINING WALL
x62.44 x962.44	PROPOSED TC, CL ELEVATION
x62.4 x962.4	PROPOSED SPOT ELEVATION
1.0%	DIRECTION OF DRAINAGE
	EMERGENCY OVERFLOW ROUTING
	PROPOSED CATCH BASINS
>	PROPOSED STORM SEWER
TW 70.0 BW 66.0	TOP OF WALL ELEVATION BOTTOM OF WALL ELEVATION
	PROPERTY LINE
	LOT LINE
	EASEMENT LINE
>>	EOF ROUTING

FOR REVIEW ONLY
PRELIMINARY
NOT FOR CONSTRUCTION

N

0 40 80 160
SCALE IN FEET

ALLIANT
733 Marquette Avenue
Suite 700
Minneapolis, MN 55402
612.758.3080
www.alliant-inc.com

CANVAS AT INVER GROVE HEIGHTS
INVER GROVE HEIGHTS, MINNESOTA
PRELIMINARY PLAT AND PUD SUBMITTAL
GRADING AND DRAINAGE PLAN

I hereby certify that this plan, specification, or report was prepared by me or under my direct supervision and that I am a duly Licensed PROFESSIONAL ENGINEER under the laws of the State of MINNESOTA

MARK RAUSCH, PE

Date License No.

QUALITY ASSURANCE/CONTROL

BY	DATE

DATE	ISSUE
8-17-2020	CITY SUBMITTAL
9-3-2020	CITY COMMENTS UPDATES

PROJECT TEAM DATA

DESIGNED:	MPR
DRAWN:	TAS
PROJECT NO:	220-0092

10

SHEET 10 OF 34

Drawing name: C:\pw_working\projectwise\mwrecion1\dms07844\200092grad.dwg Sep 03, 2020 - 11:21am

P L A N N I N G R E P O R T
CITY OF INVER GROVE HEIGHTS

HEARING DATE: January 5, 2021 **CASE NO:** 20-49V

APPLICANT/PROPERTY OWNER: Friemann Real Estate Services, Inc.

REQUEST: A variance from the minimum lot size and width requirements to allow a duplex on the property.

LOCATION: 7535 Cloman Way

COMPREHENSIVE PLAN: LDR, Low Density Residential

ZONING: R-2, Two-family residential

REVIEWING DIVISIONS: Planning
Engineering

PREPARED BY: Heather Botten
Associate Planner

BACKGROUND

In 2016 the applicant received approval for a rezoning of the property and a variance from the minimum lot size and width requirements to convert the structure on the property into a duplex. The applicant recently submitted a building permit to move forward with the conversion of the existing structure. A variance shall become void two years after it was granted unless made use of within two years. The applicant is requesting approval of the same variance that was approved in 2016.

The applicant's property is .18 acres (7,986 square feet) in size and zoned R-2, two-family residential. The property was once home to the "little green" store. The building has been vacant for a number of years. The applicant is requesting to renovate the existing building on the property and add two garages to the site to turn the property into a duplex.

SPECIFIC REQUEST

The following specific applications are being requested:

1) A variance from the minimum lot size requirements to allow a duplex to be located on a lot 7,986 square feet in size whereas 15,000 square feet is required and a lot width of 72.5 feet whereas 100 feet is required.

EVALUATION OF THE REQUEST

The following land uses, zoning districts, and comprehensive plan designations surround the subject property:

North – Duplex; zoned R-3A; guided LDR
East - Multiple-family residential; zoned R-3A; guided LDR

West – Church; zoned P; guided Public/Institutional
South – Office; zoned R-3A; guided LDR

SITE PLAN REVIEW

Setbacks. The existing building, built in 1961, is a legal non-conforming structure. The two garage additions would comply with setback requirements for the R-2 zoning district.

Impervious surface. The site is currently about 100% impervious surface. The applicant would be removing some of the existing hard surface to provide green space for his tenants.

Access. Access to the property is not changing. There would be one access point off Cloman Way.

Exterior Materials. The building would have horizontal lap siding on all four sides. The building would comply with exterior material standards.

Engineering. The Engineering Department has reviewed the plans and supports the request. No stormwater treatment facilities are required, impervious surface would be reduced on the property. The use of the property would not create any adverse impacts to storm water compared to what is existing on the property.

Infrastructure
City sewer and water are available to the site. If one shared system is used with the duplex a maintenance agreement shall be required between the tenants of the two buildings. This agreement shall be submitted to the City prior to building permit issuance.

VARIANCE REVIEW

City Code Title 10, Chapter 3. Variances, states that the City Council may grant variances when they are in harmony with the general purposes and intent of the zoning ordinance and consistent with the comprehensive plan and establishes that there are practical difficulties in complying with the official control. In order to grant the requested variances, City Code identifies criteria which are to be considered practical difficulties. The applicant's request is reviewed below against those criteria.

1. The variance request is in harmony with the general purpose and intent of the city code and consistent with the comprehensive plan.

The applicant's property and surrounding neighborhood is guided for low density residential. The use of the property for a duplex would be consistent with the comprehensive plan.

Allowing a smaller lot size and width could provide for a different housing opportunity in that it may be affordable to more individuals.

2. *The property owner proposes to use the property in a reasonable manner not permitted by the zoning ordinance.*

The property is not physically large enough to comply with the minimum lot size and width requirements for a residential use. Any redevelopment of the site would require variance approval.

3. *The plight of the landowner is due to circumstances unique to the property not created by the landowner.*

The property was originally developed in 1961 as a commercial lot, prior to the adoption of a city code. The lot size and width do not meet current code requirements and is considered a non-conforming lot. Any type of redevelopment would require variance approval.

4. *The variance will not alter the essential character of the locality.*

The lot size and width variance would not impact the character of the neighborhood. In respect to the use of the land, the proposed duplex would be consistent with other multi-family homes in the neighborhood.

5. *Economic considerations alone do not constitute an undue hardship.*
Economic considerations do not appear to be a basis or a sole basis for either of these requests.

ALTERNATIVES

A. **Approval:** If the Planning Commission finds the application acceptable, the following request should be recommended for approval:

- Approval of a **Variance** to allow a duplex on a lot 7,986 square foot in size and 72.5 feet wide subject to the following conditions:

  1. The site shall be developed in substantial conformance with the site plan on file with the Planning Department.
  2. The applicant shall meet all the conditions outlined in the City Engineers review letters and subsequent correspondence. Prior to commencement of any grading, the final grading, drainage and erosion control, and utility plans shall be approved by the City Engineer.
  3. If the duplex has one shared utility system a maintenance agreement shall be required between the tenants; this agreement shall be submitted to the City prior to building permit issuance.

Practical Difficulty:

- The property would be utilized in a reasonable manner providing for a duplex within a multi-family neighborhood. The variance requests do not appear to have any adverse impacts on the neighboring properties.
- The property was originally developed in 1961, prior to the adoption of a City Code. Any type of redevelopment would require some sort of a variance.
- The request is in harmony with the general purpose and intent of the City Ordinance and is consistent with the zoning and Comprehensive Plan designation.

B. **Denial**. If the Planning Commission does not favor the proposed application, the above requests should be recommended for denial. With a recommendation for denial, findings or the basis for the denial should be given.

RECOMMENDATION

Based on the information in the preceding report and the conditions and practical difficulty listed in Alternative A, staff is recommending approval of the variance requests.

Attachments: Exhibit A – Zoning and Location Map
Exhibit B- Survey

7535 Cloman Way
Case No. 20-49V

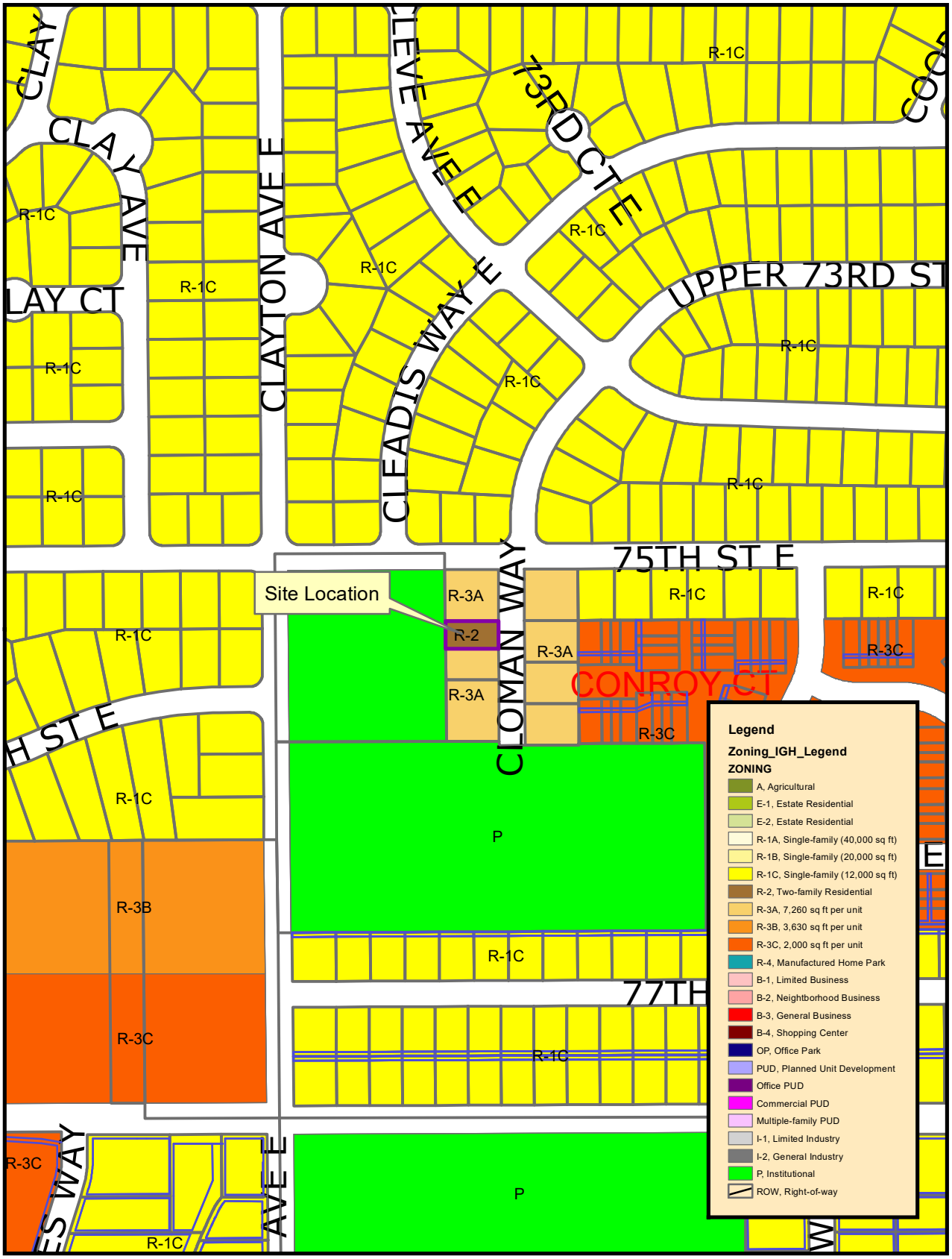

THIS DRAWING IS NEITHER A LEGALLY RECORDED MAP NOR A SURVEY AND IS NOT INTENDED TO BE USED AS ONE. THIS DRAWING IS A COMPILATION OF RECORDS, INFORMATION AND DATA LOCATED IN VARIOUS CITY, COUNTY AND STATE OFFICES AND OTHER SOURCES AND IS TO BE USED FOR REFERENCE PURPOSES ONLY. THE CITY OF INVER GROVE HEIGHTS IS NOT RESPONSIBLE FOR ANY INACCURACIES HEREIN CONTAINED
Map produced by the City of Inver Grove Heights GIS Dept.
Copyright© City of Inver Grove Heights 2020

N

Exhibit A
Zoning and Location Map

Map not to scale

Certificate of Survey

~ for ~ Friemann Companies, INC.

of: 7535 Cloman Way
Inver Grove Heights, MN 55076

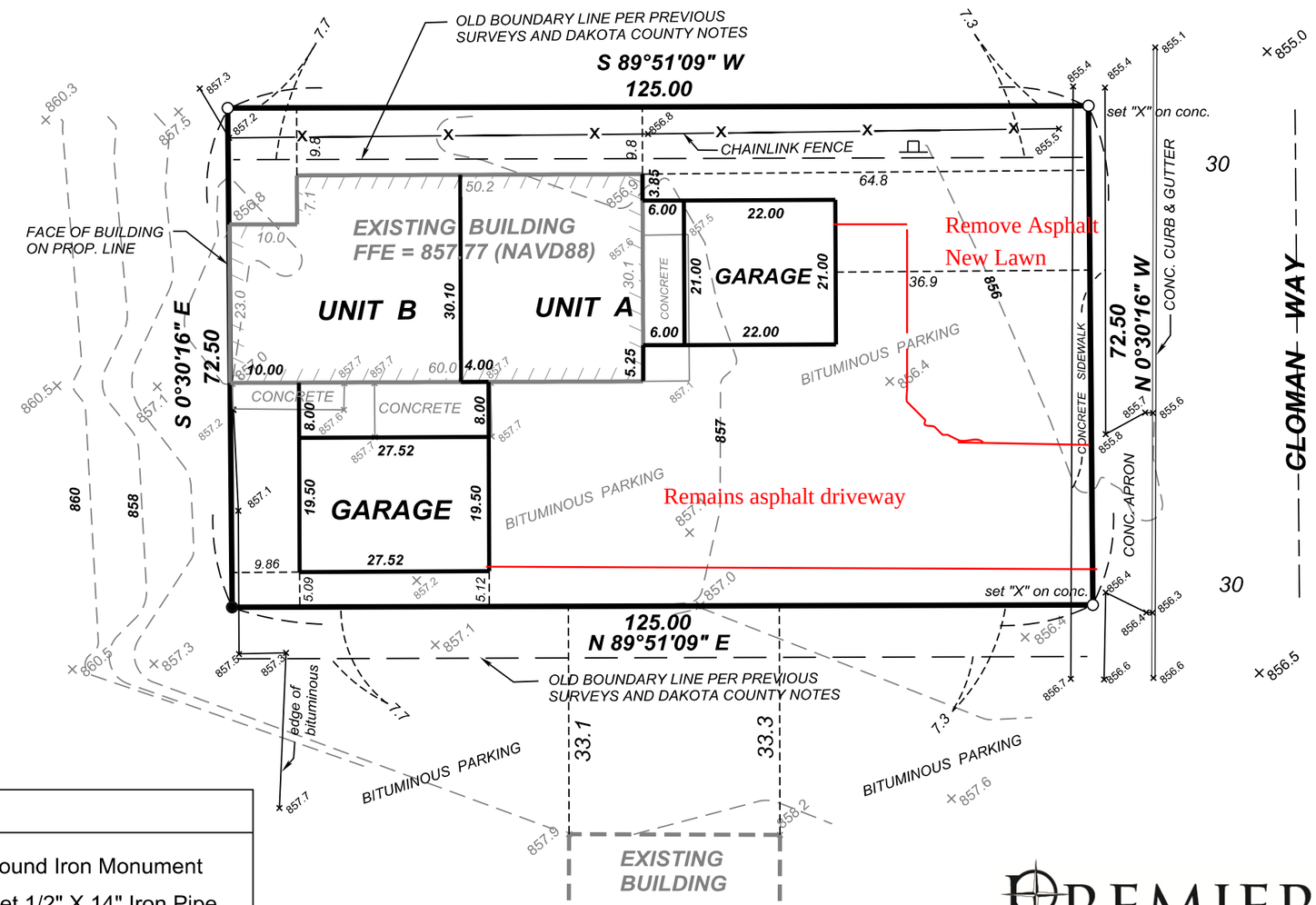

DESCRIPTION OF PROPERTY:

That part of the Northwest Quarter of the Southeast Quarter of Section 10, Township 27, Range 22, Dakota County, Minnesota, described as follows: Commencing at the Northwest corner of said quarter section, thence East on the north line thereof, 396.00 feet; thence South parallel with the West line thereof, 150.00 feet; this being the point of beginning of the tract to be described; thence South parallel with said West line, 72.50 feet; thence East parallel with said North line, 125.00 feet; thence North parallel with said West line, 72.50 feet; thence West parallel with said North line to the point of beginning. Subject to easements of record.

SURVEY NOTE:

Title issues may exist on this property. A previous survey of this property stated: Based on the note from a previous survey which stated that the plat of Amos Addition, which lies North of this property, was monumented in 1965, based on a monument at the West quarter corner of said Section 10, which later was proved to be in error. The correct corner was found to be approximately 18 feet north of that location, by the County Surveyor, and as a result, the irons set in Amos Addition and the curbs and roadway of 175th Street E. are approximately 7.5 feet (in our general vicinity) further South than they should be, according to the correct section corners. Some owners in the neighborhood may have been occupying these "too far south" lines. Consult with legal counsel as necessary.

LEGEND	
●	Found Iron Monument
○	Set 1/2" X 14" Iron Pipe
×	Spot Elevation
⊥⊓⊥	Sign

I hereby certify that this survey was prepared by me or under my direct supervision and that I am a duly licensed Professional Land Surveyor under the laws of the State of Minnesota.

Steven V. Ische	22703	04/04/16
Steven V. Ische	License No.	Date

PROJ. #1282-02

PREMIER LAND SURVEYING, LLC

952-443-3010

Traverse PC

P L A N N I N G R E P O R T
CITY OF INVER GROVE HEIGHTS

CASE NO: 20-45PUD

APPLICANT: Watermark Properties

PROPERTY OWNER: IMH Special Asset 175

REQUEST: Final Plat and Final PUD Development Approval for Canvas at Inver Grove Heights

HEARING DATE: January 5, 2021

LOCATION: Northeast quadrant of Hwy 3 and 70th Street

COMPREHENSIVE PLAN: LMDR and Mixed Use

ZONING: Planned Unit Development

REVIEWING DIVISIONS: Planning
Engineering
Park and Recreation
Fire Marshall

PREPARED BY: Allan Hunting
City Planner

BACKGROUND

An application has submitted for the final plat and final development plan for phase 1 of Canvas at Inver Grove Heights. Phase 1 consists of all 69 of the 30 foot wide lots and 39 of the 50 foot lots. Future phases will include 12 more 50 foot wide lots and the apartment building.

The City Council approved the preliminary plat and development plans on October 12, 2020.

EVALUATION OF THE REQUEST

The final plan review is limited to a review of the plans against the preliminary plat conditions of approval for compliance. The review will address each of the 19 conditions. A copy of the resolution approving the preliminary plans, including the conditions is attached.

Condition #1 relating to consistency with preliminary plans. The submitted final plans are consistent with the preliminary plans approved by Council.

Condition #2 relating to rear yard setbacks. The lots have been renumbered on the final plans so what are now Lots 1-8, Block 2 all have the required 30 foot rear yard setback.

Condition #3 relating to approval of the final grading, drainage and erosion control plans. The Engineering Department and its consultants continue to review the final plan set. There are some unique features to this project which make the review more complicated. Details still being worked out include:

- Incorporating a future below grade pedestrian crossing under 70th Street using a ten foot high culvert just west of Allen Way.
- Consistency of plans with the public improvement project for the emergency pumping systems for two regional basins in the area.
- Reviewing the design of the Allen Way access to the site which is like a land bridge with high retaining walls on either side crossing a wetland.

These items won't change the design of the project so Planning Commission can still make a recommendation. These items, along with all engineering comments will be addressed before City Council approval.

Condition #4 relating to drainage and utility easements provided on the plat. The plat provides for easements over the main drainage areas. The City Engineer has reviewed the plat and finds the necessary easements are in place.

Condition #5 relating to boundaries of open space with marker posts. Engineering has created a post and sign template for developers to use to mark the open space boundary. The final location of the posts will be approved by Engineering and will be field inspected.

Condition #6 relating to park dedication and recommendations from the Park and Rec Commission. Park dedication will consist of a cash payment for the 108 units. The park dedication fees are collected at time of final plat release.

- Five foot easement along the east boundary will be dedicated by separate document when the final plans go to City Council.
- Engineering and the applicant are working on the best location for a possible future underpass. It appears it would fit within existing right-of-way.
- The plans show an alignment for a trail running through the pipeline easement.
- Park area in the Northeast corner of the site is no longer being pursued by the Parks Department.

Condition #7 relating to plans reviewed by the Fire Marshall. The final plans provide for an emergency access from 70th Street between Lots 15 and 16. The Fire Marshall has reviewed the plans and has no issues with design and street access for emergency vehicles.

Condition #8 relating to review from Dakota County and MnDOT. Dakota County has commented on right-of-way and access. Turn lanes will be required and final details of road intersection and storm water management will be finalized before plans are approved by city council. Plans have been sent to MnDOT for their comment. No response received to date. Any conditions of approval will be addressed before plans are approved by city council.

Condition #9 relating to street stub to the east. The plans show a public street stub to the property to the east. Location has been reviewed and acceptable by the City Engineer.

Condition #10 relating to a wetland mitigation plan. The applicant has just recently submitted the wetland mitigation plan to Dakota County Soil and Water for review. This will require a review by the technical evaluation panel per state WCA requirements. Approval of the plan and approval of wetland bank credits must occur before final plans are approved by the city council.

Condition #11 relating to recording of documents. A standard condition notifying all parties of what documents must be recorded with the final plat. The City Attorney's office will work with the developer and city staff to ensure all documents are recorded.

Condition #12 relating to undisturbed areas. The plans provide for construction limits and show silt fencing for limits of disturbance. This ensures no grading occurs in the undisturbed areas.

Condition #13 relating to acknowledgment of future city approvals. This condition was drafted by the City Attorney to clarify in all developments in the Northwest Area what changes require administrative or Council review. This language will be carried over into the development contract.

Condition # 14 relating to acknowledgement of PUD zoning. This condition was drafted by the City Attorney to indicate an acknowledgement will be recorded with the County for each development indicating the zoning and regulations placed on the property. It puts on record for any future landowners that there are special regulations on the property. This same type of notification was used in Arbor Pointe.

Condition #15 relating to entering into a development contract. A meeting with the developer will be set up prior to council review to address obligations to be covered in the developer agreement. A development contract will be drafted and reviewed by the City Council during their review of the final plan set.

Condition #16 relating to documents that must be recorded with the final plat. Standard language identifying additional documents to be recorded with the final plat.

Condition #17 relating to payment of plat utility fees. The development contract will address the specific fees that the developer must pay before plat release as part of the funding for the infrastructure of the sewer and water for the Northwest Area. The Council adopted an ordinance which specifies fees to be paid at time of final plat release. There will also be additional fees collected at time of building permit for all residential structures. This condition was intended to state the developer's responsibility for paying these fees.

Condition #18 relating to street lighting. A street lighting plan has been submitted showing street lights at each intersection with Allen Way in the development.

Condition #19 relating to fencing on top of retaining walls. The grading plans identify all walls will have fencing where required by code. Typically fencing is required on walls four feet or taller.

ALTERNATIVES

A. **Approval.** If the Planning Commission finds the proposed Final plat and Final PUD development plans for The Crossings at Inver Woods acceptable, a recommendation of approval should be made subject to the following conditions:

1. The project shall be developed in substantial conformance with the following plans on file with the Planning Department except as may be modified by the conditions below:

Final Plat	
Final Site Plan	dated 10/5/20
Natural Areas and Open Space Plan	dated 8/3/20
Construction Plan Set (14 sheets)	dated 10/16/20
Grading Plan Set (5 sheets)	dated 10/16/20
Landscape Plan	dated 10/20/20
Building Plans (5 sheets)	dated 10/5/20

***The final list of approved plans and date of plans shall be identified in the development contract.**

2. All plans are subject to the review and approval of the City Engineer including comments from city consultants reviewing the plans prior to work commencing on the site.

3. Prior to any work commencing on the site, the developer shall enter into a development contract with the City. The development contract will address all other preliminary conditions of approval relating to other agreements required, park dedication, and other pertinent specific performance standards for this phase of the PUD.

B. **Denial.** If the Planning Commission does not find the application to be acceptable, a recommendation of denial should be made. Specific findings supporting a basis for denial must be stated by the Commission if such a recommendation is made.

RECOMMENDATION

Based on this review, the Planning Division and Engineering recommends approval of the final plat and PUD development plans subject to the conditions stated above.

ATTACHMENTS:

Location Map
Applicant Narrative
Preliminary PUD conditions of approval and site plan
Final Plat
Final Site Plan
Construction Plan Set
Grading Plan Set
Landscape Plan

Location Map
Case No. 20-45PUD

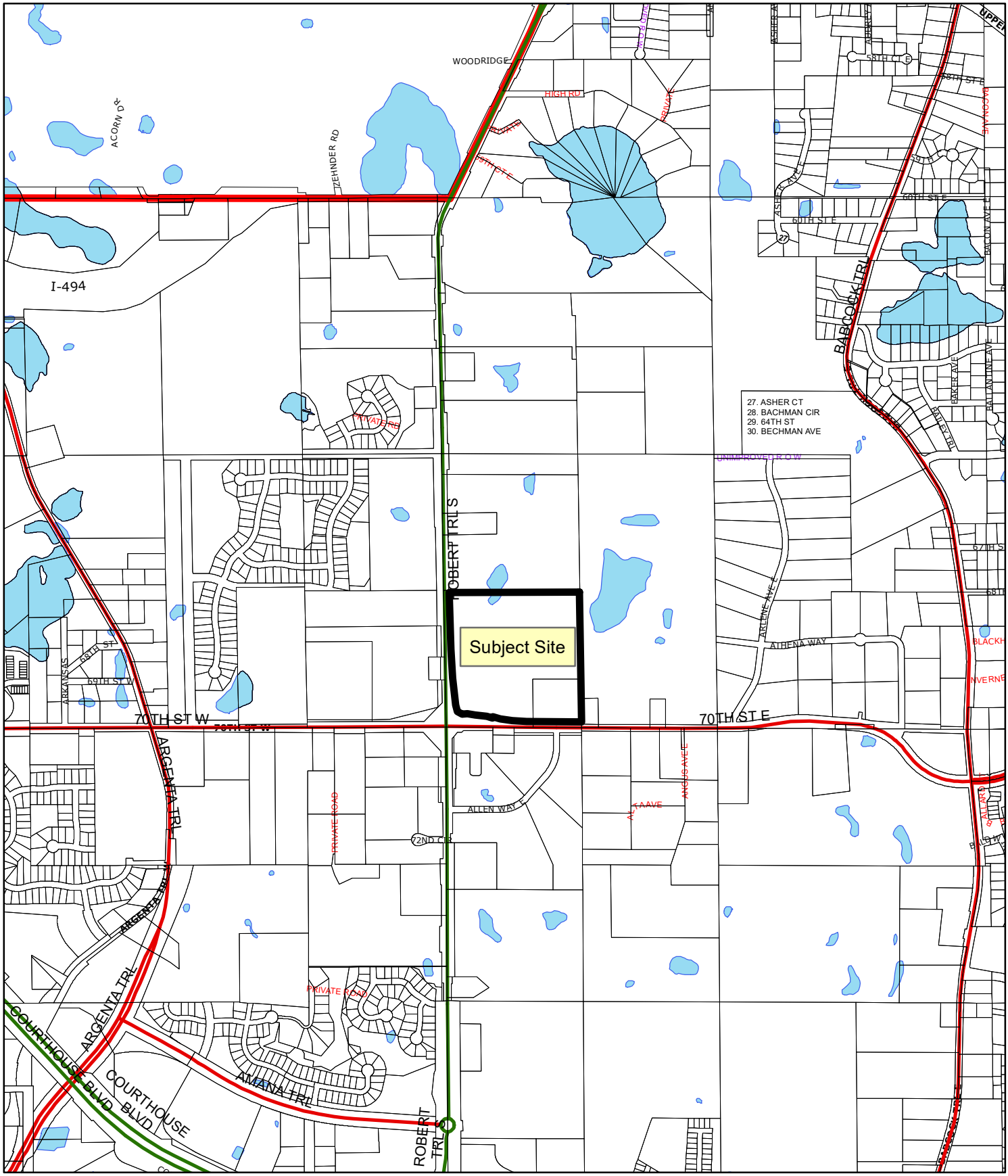

CITY OF INVER GROVE HEIGHTS
DAKOTA COUNTY, MINNESOTA

RESOLUTION NO. 2020-221

A RESOLUTION APPROVING A PRELIMINARY PLAT AND PRELIMINARY PUD DEVELOPMENT PLAN CONSISTING OF 120 SINGLE FAMILY LOTS, ONE LOT FOR 100-150 UNIT APARTMENT BUILDING AND SIX OUTLOTS FOR THE PLANNED DEVELOMENT TO BE KNOWN AS CANVAS OF INVER GROVE HEIGHTS

CASE NO. 20-27PUD

WHEREAS, a preliminary plat and preliminary PUD development plan application has been submitted to the City for property legally described as;

The Southwest Quarter of the Southwest Quarter of Section 5, Township 27, Range 22, Dakota County, Minnesota

WHEREAS, a public hearing concerning the preliminary plat and preliminary PUD development plan was held before the Inver Grove Heights Planning Commission in accordance with Minnesota Statues, Section 462.357, Subdivision 3 on September 15 and October 6, 2019;

NOW, THEREFORE BE IT RESOLVED BY THE CITY COUNCIL OF INVER GROVE HEIGHTS that, the Preliminary Plat and Preliminary PUD development plan for the planned development of Canvas of Inver Grove Heights is hereby approved subject to the following conditions:

1. The final plat and accompanying site plans shall be in substantial conformance with the following plans on file with the Planning Department except as may be modified by the conditions below.

    1. Canvas at Inver Grove Heights Preliminary Plat and PUD Submittal plan set dated 9/3/2020 (34 sheets).
    2. Natural Area/Open Space Plan dated 9/23/2020
    3. Hard Surface Exhibit Plan dated 9/3/2020
    4. Parking Exhibit Plan dated 9/3/2020
    5. Public Road Access Exhibit 9/23/20
    6. Trails and Sidewalk Exhibit 9/25/20
    7. Pipeline Trail Exhibit 9/23/20

8. Fire Access Exhibit 9/23/20

***The final list of approved plans and date of plans shall be identified in the development contract.**

2. Lots 6-14, Block 1 shall maintain the required 30 foot rear yard setback. All other setbacks shall be consistent with those listed on the preliminary site plan.

3. Prior to final plat and plan approval, the final grading, drainage and erosion control, and utility plans shall be approved by the City Engineer and subject to all conditions noted by the City Engineer and consultants.

4. Drainage and utility easements shall be provided on the final plat as required by the City Engineer.

5. The developer shall be responsible for installing marker posts at reasonable locations to define the boundary of the open space. This provides identification for future land owners to know boundaries of the open space areas. The final PUD plans must show the location of the marker posts.

6. Plan approval shall be subject to the recommendations of the Park and Recreation Commission from their meeting September 9, 2020. A summary is listed in this staff report. Outlot G is no longer needed for a future park.

7. The final plan set shall be subject to the city Fire Marshal review memo dated 8/27/20 including, but not limited to providing fire lanes and providing a temporary fire lane access for a secondary access to the site.

8. The approval of the preliminary Plat and PUD development plans are subject to the review and comment from Dakota County and MnDOT.

9. Public street stub to the east shall be required as shown on the public road access easement. Perpendicular street parking shown shall be relocated away from the public street.

10. A wetland mitigation plan for the impacted wetlands shall be submitted per the Wetland Conservation Act and must be approved by the TEP review panel and the city. Any wetland impact shall be approved prior to or at time of City Council action on the final plans.

11. Prior to execution of the plat by the City and prior to recording of the plat with the County, the Owner shall execute a Storm Water Facilities Maintenance Agreement with the City whereby the developer shall be responsible for the maintenance of storm water improvements on such lots.

12. The developer shall be responsible to ensure the undisturbed area shown on the Open Space Plan remains undisturbed through all construction grading. Prior to execution of the plat by the City and prior to recording of the plat with the County, the Developer must pay the City utility plat connection fees consisting of a Water Utility Fee, Sanitary Sewer Utility fee and Storm Water Sewer Utility fee according to the formulas adopted by city ordinance.

13. In the Development Contract, the Developer and Owner shall agree that the following elements of the Planned Unit Development shall not be altered, changed or removed without first obtaining the following consents:

Site Plan Element	**Consent Required By**
Building Location	City Council
Driveways and Private Roads	Planning Department
Landscaping	Planning Department
Location of Utilities	Engineering Department
Location of Conservation Easement and Open Space	City Council

14. The Developer and Owner shall execute an Acknowledgement of Planned Unit Development Zoning. This Acknowledgement shall state that property within the plat is subject to the approved PUD plans and PUD zoning and that the development on the property must conform to the PUD plans and PUD zoning. This Acknowledgement shall be recorded when the plat is recorded.

15. The Developer and Owner shall enter into a Development Contract with the City. The form of Development Contract shall substantially comply with the model Development Contract which is part of the Administrative Code, taking into account the particular requirements of the Planned Unit Development plans.

16. The following documents shall be recorded when the plat is recorded:
    - Development Contract;
    - Storm Water Facilities Maintenance Agreement;
    - Acknowledgement of PUD Zoning.

17. Northwest Area plat connection fees are due at time of final plat release for each phase. The connection fees will be listed in the development contract. The Northwest Area building permit connection fees are due with building permit for each unit. Final details of the amounts to be paid shall be part of the final PUD plan review.

18. Street lighting shall be required along all public streets. The street lighting plans shall be approved by the City prior to installation.

19. Retaining walls shall require fencing on top of wall per City Code requirements.

Passed this 12th day of October, 2020.

AYES: 5
NAYS: 0

George Tourville

George Tourville, Mayor

ATTEST:

Rebecca Kiernan

Rebecca Kiernan, City Clerk

SITE PLAN DATA:

AREA AND DENSITY	
CURRENT ZONING	PUD
PROPOSED ZONING	PUD
GROSS SITE AREA	39.54 AC
ARTERIAL ROW AREA (ROBERT TRAIL S, & EAST 70TH ST)	4.91 AC
COLLECTOR ROW AREA	2.74 AC
PIPELINE EASEMENT AREA *	3.12 AC
EX. 100 YEAR FLOOD AREA *	6.23 AC
* EXCLUDES R/W AND EASEMENT OVERLAPS	
LOT TYPE	
30' WIDE	69 LOTS
50' WIDE	51 LOTS
APARTMENT SITE	100–150 UNITS
SETBACKS	
FRONT	34 FT
REAR	20 FT
SIDE (30' WIDE)	4 FT
SIDE (50' WIDE)	5 FT
SIDE TO PUBLIC ROW (TYPICAL)	20 FT

PARKING SUMMARY
2 GARAGE STALLS PER UNIT
2 DRIVEWAY STALLS PER UNIT
56 ADDITIONAL GUEST STALLS
=4*69+4*51+56 = 536 TOTAL PARKING STALLS

NATURAL AREA/ OPEN SPACE DATA:

GROSS SITE AREA	39.54 AC
ARTERIAL ROW AREA (ROBERT TRAIL S, & EAST 70TH ST)	4.91 AC
WETLAND AREA	1.70 AC
NET DEVELOPABLE AREA	32.93 AC
REQUIRED	
OPEN AREA (20%)	6.586 AC
NON-DISTURBED OPEN AREA (10%)	3.293 AC
CONTIGUOUS AREA (75%)	4.940 AC
PROVIDED	
OPEN AREA	11.594 AC
NON-DISTURBED OPEN AREA (A1–A4)	4.774 AC
CONTIGUOUS AREA (B1)	4.945 AC +
CONTIGUOUS AREA (B2)	2.729 AC

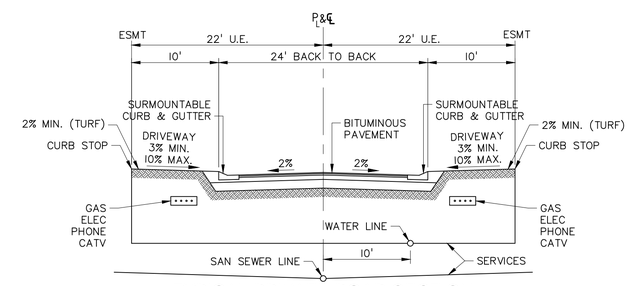

TYPICAL PRIVATE ROAD SECTION
NOT TO SCALE

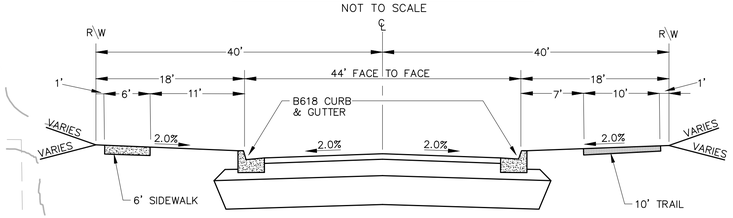

TYPICAL 80' PUBLIC ROW ROAD SECTION
NOT TO SCALE

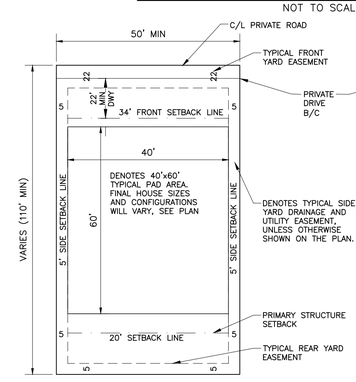

TYPICAL 50' LOT DETAIL
NOT TO SCALE

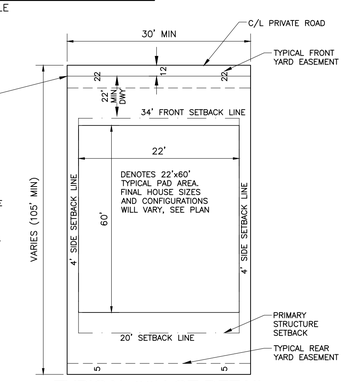

TYPICAL 30' LOT DETAIL
NOT TO SCALE

SITE LEGEND:

- PROPERTY LINE
- RIGHT-OF-WAY LINE
- LOT LINE
- EASEMENT LINE
- SETBACK LINE
- EXISTING WETLAND
- WETLAND BUFFER
- WETLAND BUFFER AREA (SEE WETLAND MANAGEMENT PLAN)
- WETLAND IMPACT AREA (SEE WETLAND MANAGEMENT PLAN)
- PROPOSED CURB AND GUTTER
- PROPOSED RETAINING WALL

N

0 40 80 100
SCALE IN FEET

FOR REVIEW ONLY
PRELIMINARY
NOT FOR CONSTRUCTION

ALLIANT
733 Marquette Avenue
Suite 700
Minneapolis, MN 55402
612.758.3080
www.alliant-inc.com

CANVAS AT INVER GROVE HEIGHTS
INVER GROVE HEIGHTS, MINNESOTA
PRELIMINARY PLAT AND PUD SUBMITTAL
SITE PLAN

I hereby certify that this plan, specification, or report was prepared by me or under my direct supervision and that I am a duly Licensed PROFESSIONAL ENGINEER under the laws of the State of MINNESOTA

MARK RAUSCH, PE

Date License No.

QUALITY ASSURANCE/CONTROL

BY	DATE

DATE	ISSUE
8-17-2020	CITY SUBMITTAL
9-3-2020	CITY COMMENTS UPDATES

PROJECT TEAM DATA

DESIGNED:	MPR
DRAWN:	TAS
PROJECT NO:	220-0092

7

SHEET 7 OF 34

Drawing name: C:\pw_working\projectwise\mwregion1\dms07844\200092site.dwg Sep 08, 2020 - 7:53am

CANVAS AT INVER GROVE HEIGHTS

PHASE 1 - FINAL PLANNED UNIT DEVELOPMENT / FINAL PLAT REVIEW SUBMITTAL NARRATIVE

Inver Grove Heights, Minnesota
November 16, 2020

DEVELOPMENT TEAM

Applicant/Developer/Builder:	Watermark Equity Group, Ian Peterson
Civil Engineer:	Alliant Engineering, Inc., Mark Rausch
Surveyor:	Alliant Engineering, Inc., Peter Goers
Landscape Architect:	Alliant Engineering, Inc., Mark Kronbeck

SITE INFORMATION

Legal Description:

The Southwest Quarter of the Southwest Quarter of Section 5, Township 27, Range 22, Dakota County, Minnesota.

Abstract Property

Address:	Unassigned
PID:	200050052011 and 200050052012
Total Acres:	39.542 ac

PREVIOUS DEVELOPMENT APPLICATION APPROVAL

Watermark Equity was granted preliminary planned unit development and preliminary plat approval by Inver Grove Heights City Council in Resolution No. 2020-221 and Case No. 20-27PUD. The resolution was approved on October 12th, 2020 for the request consisting of 69-30' wide single-family lots, 51-50' wide single-family lots and a 100-150 unit apartment site.

PHASE 1 - PLANNED UNIT DEVELOPMENT REQUEST

The proposed phase 1 development request is consistent with the approved preliminary PUD and plat and includes; all 69 of the 30' wide single-family lots, 39 of the 50' wide single family lots and the proposed private clubhouse and pool.

COMPREHENSIVE PLAN AND ZONING DESIGNATION

The development property is guided as Mixed-Use and Low-Medium Residential within the City's 2040 Land Use Plan. The City's Mixed-Use land use designation targets a residential dwelling unit density range of 12-35 units per acre. The Low-Medium Density Residential targets a residential dwelling unit density range of 4-8 residential units/net acre. The development fits within City guiding plans as previously approved.

The development site currently zoned (PUD) Planned Unit Development. The previously approved preliminary PUD and preliminary plat requested zoning for the site to establish a PUD zoning for the entire development site, compatible and consistent with the City's goals and objectives for the property. This application is the first phase of the proposed development plan.

EXISTING SITE DESCRIPTION

The development property is located within the City of Inver Grove Height's Northwest Area Overlay District and is currently undeveloped with a mixture of 'treeless meadow' growth and portions wooded. The property is a combination of 2 parcels totaling 39.542 acres and bound by Robert Trail S to the West, 70th St E to the South and private properties to the North and East. The site is adjacent to available public infrastructure including: sanitary sewer, water main, and roadways for servicing the proposed development.

The proposed plat boundary contains three wetland areas that were previously delineated and have been confirmed by an environmental specialist at Alliant Engineering. Two of the wetlands on site have been identified as landlocked basins by the city as part of the Northwest Area Stormwater Management Plan. Two of three wetlands on site will show impacts, Wetland 1 will be impacted as part of the construction of collector road for the proposed development and Wetland 2 will be impacted due to site constraints.

PROPOSED RESIDENTIAL PUD DEVELOPMENT PLAN

The applicant proposes to provide the City of Inver Grove Heights with phased residential development of diverse housing styles that preserves natural site features, extends public infrastructure and provides for stormwater management goals. The current phase 1 development application proposes to initiate the neighborhood with 50' wide lots and 30' wide lots surrounding a private club house/amenity area. A future phase(s) will complete the remainder of the 50' wide lots and the apartment building site. All lots will be provided with public right of way access via the extension of public roadway with sidewalks and trails. It is proposed that the public roadway extend north from 70th Street and be provided with public utilities sized to accommodate future development to the north. A second public roadway with public utilities is proposed easterly in the development and stubbed to the plat boundary for future development to the east.

The proposed phase 1 development plan is consistent with the City approved preliminary PUD/plat and the City of Inver Grove Heights Northwest Area Overlay District as reviewed. The following is a summary of primary phase 1 project elements currently proposed:

- Diverse housing styles
    - 39-50' wide single-family homes with multiple product styles.
    - 69-30' wide single-family homes with multiple product styles.
- Central club house & amenity area
- Preservation of environmental features and dedication of open space.
- HOA maintained community
- HOA maintained open areas
- Extension of collector roadway with trails and walks to north.
- Extension of local roadway with sidewalk to the east.
- Extension of sanitary sewer and water for future development to the north and east
- Preservation of wetland areas with limited impacts
- Multiple stormwater management areas
- Enhanced development landscaping

Development Plan Area	
Gross Phase 1 Plat Acreage	39.54 acres
Arterial ROW	4.91 acres
Wetland Area	1.70 acres
Net Development Acreage	32.93 acres
Pipeline Easement Area	3.12 acres
Collector ROW Area	2.75 acres
Lot Dimensions	30'/50'
Width	30'/50' min.
Lot Sizes	See Final Plat & Summary
Structure Setbacks	30' Wide Lots
Front	20'
Side (internal)	4'
Side to Private Drive B/C	15'
Any Side to Public ROW	20'
To Private Parking Stalls	5'
Garage to Private Drive B/C (min driveway length)	22'
Setback to Robert Trail and 70th Street	50'
Structure Setbacks	50' Wide Lots
Rear	20'
Side (internal)	5'
Side to Private Drive B/E	15'
Any Side to Public ROW	20'
To Private Parking Stalls	5'
Front/Garage Side to Public ROW	22' (33' Min Dwy Length)
Front/Garage Private Drive B/C (min driveway length)	22'
Clubhouse to Public ROW (front/side/rear)	20'
Clubhouse Side (internal)	5'

Preliminary PUD/Plat Environmental Calculations

Northwest Area Overlay District Criteria	Required	Provided*
Open Area (20%)	6.59 AC	11.59 AC
Non-Disturbed Open Area (10%)	3.29 AC	4.77 AC
Contiguous Area (75% open space)	4.94AC	4.95 AC (largest cont. area)

*Areas are consistent with approved preliminary PUD/plat with no changes.

Architecture

It is currently anticipated that architecture be compatible for different housing types in addition to the club house, apartment building and amenity area. Refer to previously provided single family building elevations.

Site Access, Pedestrian Circulation and Parking

Vehicular access from public right of way to the proposed development will occur via a proposed road access to 70th St E / CSAH 26. Public right of way will be extended north and east through the development providing several connection points for the proposed private roadways. The development will be providing a sidewalk and trail along the proposed collector road extension to the north and a sidewalk along the proposed local road extension to the east.

The project abuts MNDOT right of way (TH 3 / Robert Trail) along the western edge of the plat. MNDOT provided review comment during the project's preliminary review phase. MNDOT did not require any plan revisions. The phase 1 plans do include permanent right of way dedication for the TH 3 roadway easement and extension of the existing 15' trail easement to the north plat boundary along TH 3 right of way. Any impacts to MNDOT right of way will require separate permitting from MNDOT.

The project also abuts Dakota County right of way (CSAH 26 / 70th St) along the south plat boundary. Dakota County provided plat review comments during the preliminary review stage and requested a small addition of right of way along the existing round about. The right of way is provided in the phase 1 plat along with permanent right of way dedication over the existing CSAH 26 road easement. The County has referenced to likely need for adding turn lanes at the proposed development intersection with CSAH 26. The phase 1 development plans do include a preliminary turn lane design. The preliminary design includes the addition of an EB CSAH 26 left turn lane into the development and a new WB right and left turn lanes. All proposed work improvements within CSAH 26 right of way improvements will require permitting and review by Dakota County. The development team will work with Dakota County and City Staff when final designing all County right of way improvements.

The development will have ample parking to support the future residents and their guests. The plan as proposed provides the following phase 1 parking:

Parking Summary

Private Driveway (2/home)	216 (additional 24 in future phase)

Private Garage (2/home)	216 (additional 24 in future phase)
Private Guest Parking	31 (additional 8 in future phase)
Public On-street Parking (Road B)	13
Total Available Parking	476 Phase 1 Parking Stalls (additional 56 in future phase)

Grading

The entire final plat site area will be mass graded to shape in the proposed roadways, lot configurations, stormwater management basin and common area. The site is graded to match elevations at the site perimeter and to drain to a proposed infiltration basin throughout the development. Low floor elevations satisfy all requirements per the City of Inver Grove Heights for freeboard from EOF's and HWL's. Roadways are designed to meet all City requirements. Future plat areas including the northern 12 single family homes and the apartment site will be mass graded at this time in preparation for future development and to aide in earthwork balancing.

Sanitary Sewer and Watermain

The development site currently contains a sanitary sewer stub provided at the southern edge of the property on 70th St E. The site will provide sanitary sewer stubs to the East and North per the City's Northwest Area Planned Utility Map. The remainder of the site will be served by 8" sanitary sewer.

The development will connect to and extend a watermain service at the western edge of the property along Robert Trail S. The connection will require the removal of a hydrant. Stubs will be provided to the East and North per the City's Northwest Area Planned Utility map. The remainder of the site will be served by 8" watermain and hydrants will be spread through the development to meet city requirements.

Stormwater Management

The development site falls within the City's Northwest Area and will have to meet the Northwest Area Stormwater Management requirements. To meet these requirements the site will utilize multiple infiltration basins and will use proprietary and sediment forebays as means of pretreatment. The site drains to two landlocked basins EP-027 and EP-034. All storage at both the 50 yr and 100 yr HWL has been replaced for the roadway connection that impacts EP-034. See stormwater management plan for more detailed calculations and explanations.

Wetlands

Two of the wetlands on site have been identified as landlocked basins by the city as part of the Northwest Area Stormwater Management Plan. Two of three wetlands on site will show impacts, Wetland 1 will be impacted as part of the construction of collector road for the proposed development and Wetland 2 will be impacted due to site constraints.

Wetland Summary:

1) Wetland 1 - 22,941 sf – Impact proposed
2) Wetland 2 - 51,152 sf – No Impact proposed
3) Wetland 3 - 965 sf – Impact proposed

Tree Preservation/Replacement

A tree inventory was completed on behalf of the City of Inver Grove Heights and that information is included in the proposed development plans. The tree inventory was performed on the full development parcel from the western boundary of Robert Trail S to 70th St E to the South and private properties to the North and East. The development site contains a mixture of 'treeless meadow' as well as several stands of significant trees. Trees will generally be preserved in the south east around existing wetland, in the north east, and the north west around existing wetland. Trees within the center of the site will be removed to grade the subdivision.

As the submittal is a PUD and includes a mixture of compact 30' lots, 50' single family lots and an apartment building, a tree removal limit of 40% of significant or heritage caliper inches was suggested based on overall density. Beyond the 40% allowable removal, caliper inches are to be replaced at a rate of 50% for Category A trees, and 100% for Categories B and C. Any preserved significant or heritage tree damaged by construction within 30' of the tree preservation boundary shall be replaced by the applicant on a 1:1 DBH basis. Replacement trees shall be a minimum of 2 ½ diameter deciduous or 6' coniferous. The development plan does require the removal of 1,491 caliper inches which require mitigation; to mitigate the loss the landscape plan proposes reforestation of 1,491 caliper inches equal to 597 new trees.

Landscaping and Amenities

The project proposes a significant landscape plan including an amenity/club area which will feature plant material organized to suit the program once developed in further detail. A portion of trees proposed to mitigate existing tree loss are located at least 2 overstory trees per lot, with the exception of block 1 lots 15-25 due to pad proximity to the gas easement. Additional mitigation trees are used to create a conifer buffer on the south along 70th St. as well as portions of S. Robert Trail and to enhance stormwater features. Final lot build-out will also include foundation planting to be provided by owner. The apartment site, once developed in future, will feature landscaping to compliment the building foundation, parking lot areas, and buffering as needed.

TIMING/PHASING

The Applicant is proposing to mass grade the entire development site in phase 1. Phase 1 will include all infrastructure required for the phase 1 plat lot area along with trunk utility extension to the north plat boundary. The future development phase will occur as market conditions allow, please refer to phasing plan for further details on phasing of overall site.

CANVAS AT INVER GROVE HEIGHTS

KNOW ALL PERSONS BY THESE PRESENTS: That Watermark Equity Group, LLC, an Illinois limited liability company, owner of the following described property:

The Southwest Quarter of the Southwest Quarter of Section 5, Township 27, Range 22, Dakota County, Minnesota.

Has caused the same to be surveyed and platted as CANVAS AT INVER GROVE HEIGHTS and does here by donate and dedicate to the public the public ways and the drainage and utility easements as created by this plat.

In witness whereof said Watermark Equity Group, LLC, an Illinois limited liability company, has caused these presents to be signed by its proper officer this ___ day of _____, 20___.

Signed: Watermark Equity Group, LLC.
By _____
Eric Theisen, Managing Member

STATE OF _____
COUNTY OF _____

This instrument was acknowledged before me on this ___ day of _____, 20___, by Eric Theisen, Managing Member of Watermark Equity Group, LLC, an Illinois limited liability company, on behalf of the company.

_____ Signature

_____ Printed

Notary Public, _____County, _____
My Commission Expires _____

I Peter Goers, Licensed Land Surveyor, do hereby certify that I have surveyed or directly supervised the survey of the property described on the plat; and prepared this plat or directly supervised the preparation of this plat; that I am a duly Licensed Land Surveyor in the State of Minnesota; that this plat is a correct representation of the boundary survey; that all mathematical data and labels are correctly designated on this plat; that all monuments depicted on this plat have been, or will be correctly set within one year; that all water boundaries and wet lands, as defined in Minnesota Statutes, Section 505.01, Subd. 3, as of the date of this surveyor's certification are shown and labeled on this plat; and all public ways are shown and labeled on this plat.

Dated this ___ day of _____, 20___

_____
Peter Goers, Licensed Land Surveyor
Minnesota License No. 44110

STATE OF MINNESOTA
COUNTY OF _____

This instrument was acknowledged before me on this ___ day of _____, 20___, by Peter Goers, Licensed Land Surveyor, Minnesota License No. 44110.

_____ Signature

_____ Printed

Notary Public, _____ County, Minnesota
My Commission Expires _____

CITY PLANNING COMMISSION
Approved by the Planning Commission of the City of Inver Grove Heights, Minnesota this ___ day of _____, 20___.

Signed: _____ Signed: _____
Secretary Chair

CITY COUNCIL, INVER GROVE HEIGHTS, MINNESOTA

This plat was approved by the City Council of Inver Grove Heights, Minnesota this ___ day of _____, 20___, and hereby certifies compliance with all requirements as set forth in Minnesota Statutes, Section 505.03, Subdivision 2.

Signed: _____ Signed: _____
Mayor Clerk

COUNTY SURVEYOR, DAKOTA COUNTY, MINNESOTA

I hereby certify that in accordance with Minnesota Statutes, Section 505.021, Subd. 11, this plat has been reviewed and approved this ___ day of _____, 20___.

By: _____
Todd B. Tollefson
Dakota County Surveyor

DEPARTMENT OF PROPERTY TAXATION AND RECORDS

Pursuant to Minnesota Statutes, Section 505.021, Subd. 9, taxes payable in the year 20___, on real estate hereinbefore described, have been paid. Also, pursuant to Minnesota Statutes, Section 272.12, there are no delinquent taxes, and transfer has been entered on this ___ day of _____, 20___.

By: _____
Amy A. Koethe
Director of Department of Property Taxation and Records

COUNTY RECORDER, COUNTY OF DAKOTA, STATE OF MINNESOTA

Document Number _____

I hereby certify that this plat of CANVAS AT INVER GROVE HEIGHTS was filed in the Office of the County Recorder for public record on this ____ day of _____, 20__, at ____ o'clock ___.M. and was duly filed in Book _____ of Plats, page _____, as Document No. _____.

By: _____
Amy A. Koethe
County Recorder

ALLIANT
ENGINEERING

CANVAS AT INVER GROVE HEIGHTS

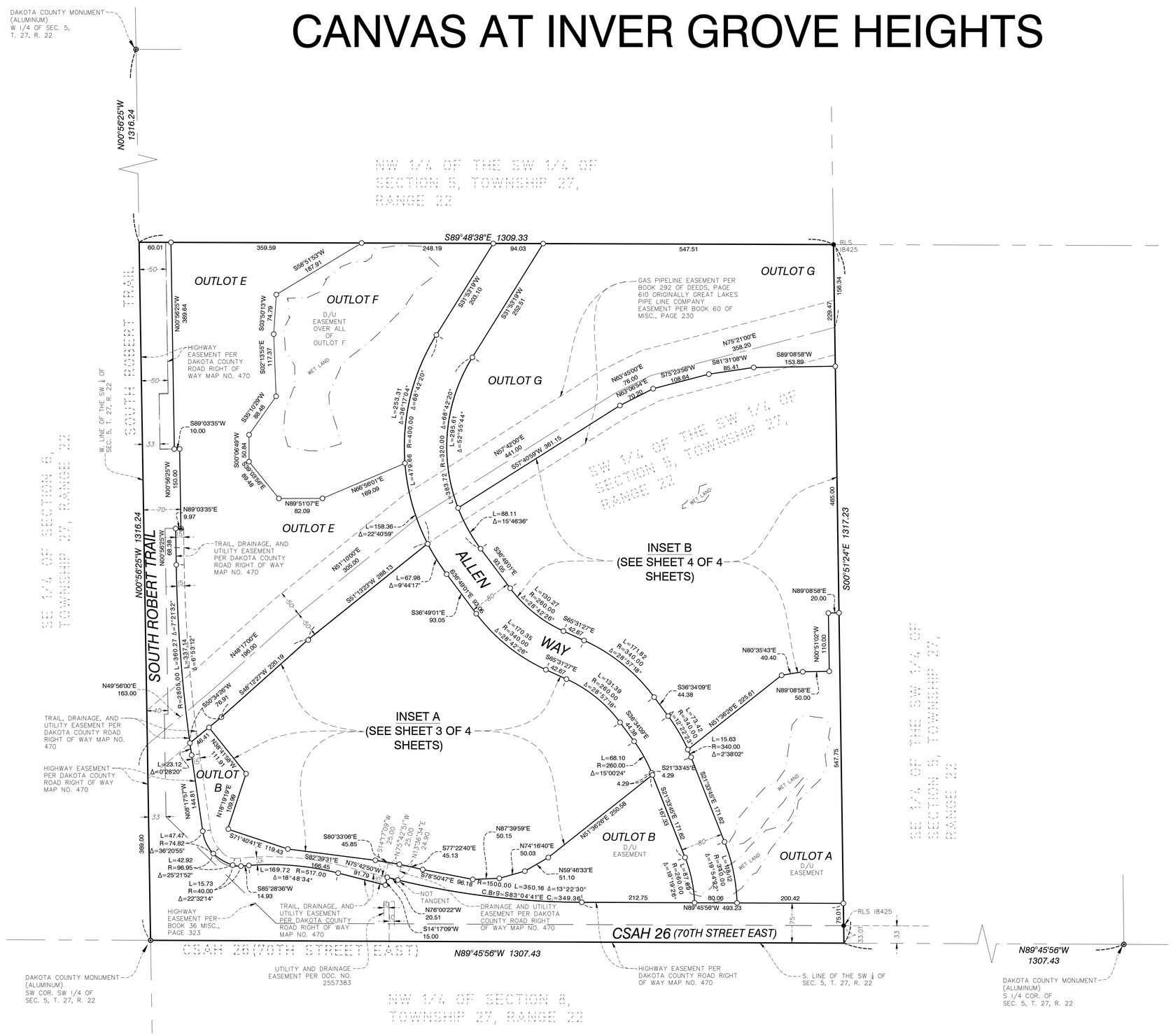

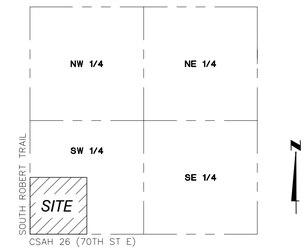

VICINITY MAP

SECTION 5, T.27N, R.22W

NOT TO SCALE

THE SOUTH LINE OF THE SOUTHWEST QUARTER OF SECTION 5, TOWNSHIP 27, RANGE 22 IS ASSUMED TO HAVE A BEARING OF N89°45'56"W.

- ▲ Denotes found mag nail
- ● Denotes monument found 1/2 inch iron pipe marked as shown
- ○ Denotes 1/2 inch x 18 inch iron monument set marked by license no. 44110 unless otherwise shown
- ⊙ Dakota County Aluminum Monument

Scale in feet

0 100 200 250

1 INCH = 100 FEET

ALLIANT ENGINEERING

CANVAS AT INVER GROVE HEIGHTS

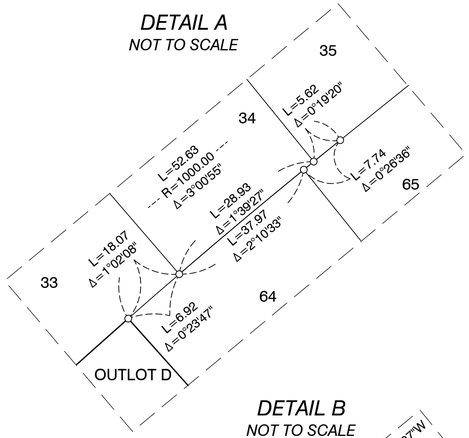

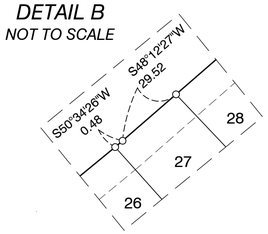

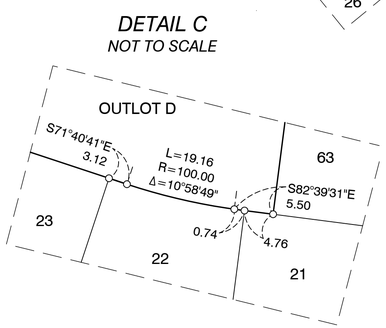

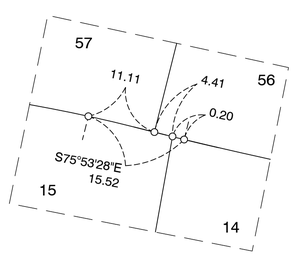

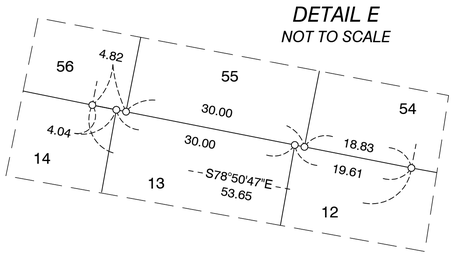

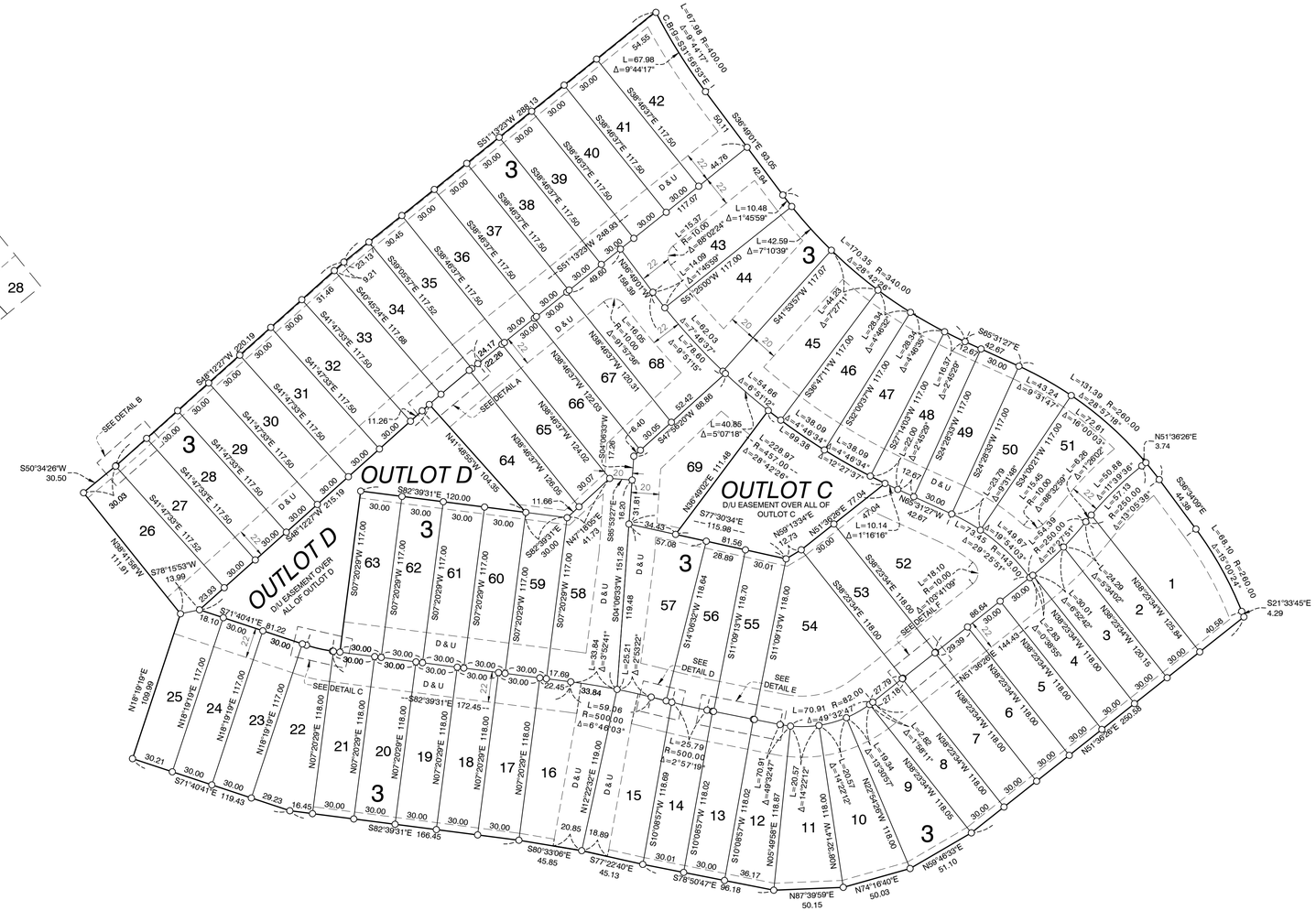

DRAINAGE AND UTILITY EASEMENTS ARE SHOWN THUS:

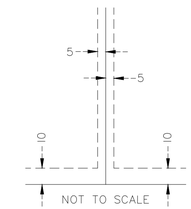

Being 5 feet in width and adjoining lot lines and 10 feet in width and adjoining street lines as shown on this plat, unless otherwise shown.

THE SOUTH LINE OF THE SOUTHWEST QUARTER OF SECTION 5, TOWNSHIP 27, RANGE 22 IS ASSUMED TO HAVE A BEARING OF N89°45'56"W.

▲ Denotes found mag nail

○ Denotes 1/2 inch x 18 inch iron monument set marked by license no. 44110 unless otherwise shown

D & U Denotes drainage and utility easement

Scale in feet

0 50 100 150

1 INCH = 50 FEET

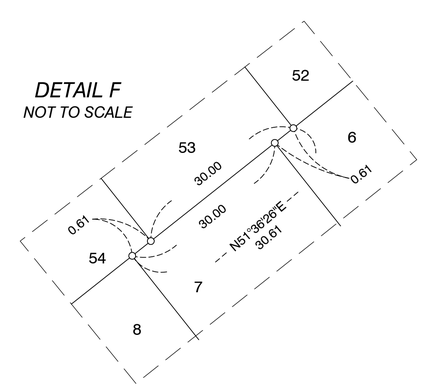

INSET A

(see sheet 2 of 4 sheets)

ALLIANT ENGINEERING

CANVAS AT INVER GROVE HEIGHTS

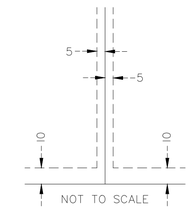

Being 5 feet in width and adjoining lot lines and 10 feet in width and adjoining street lines as shown on this plat, unless otherwise shown.

THE SOUTH LINE OF THE SOUTHWEST QUARTER OF SECTION 5, TOWNSHIP 27, RANGE 22 IS ASSUMED TO HAVE A BEARING OF N89°45'56"W.

▲ Denotes found mag nail

○ Denotes 1/2 inch x 18 inch iron monument set marked by license no. 44110 unless otherwise shown

D & U Denotes drainage and utility easement

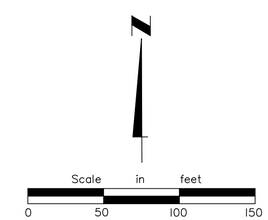

INSET B

(see sheet 2 of 4 sheets)

ALLIANT ENGINEERING

CANVAS AT INVER GROVE HEIGHTS
FINAL PLAT - PHASE 1
INVER GROVE HEIGHTS, MINNESOTA

PROJECT LOCATION

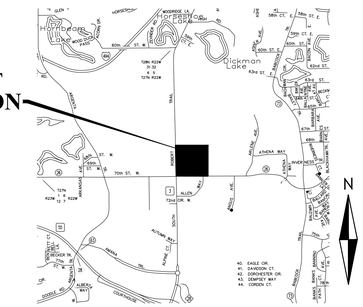

VICINITY MAP
NOT TO SCALE

DEVELOPER
WATERMARK EQUITY GROUP
4000 SHORELINE DRIVE
SPRING LAKE PARK, MN 55384
CONTACT: IAN PETERSON
PHONE: 312-813-5228
EM: ipeterson@wmprops.com

CONSULTANT
ALLIANT ENGINEERING, INC.
733 MARQUETTE AVE
SUITE 700
MINNEAPOLIS, MINNESOTA 55402
PH: 612-758-3080

ENGINEER
MARK RAUSCH
LICENSE NO. 43480
EM: mrausch@alliant-inc.com

SURVEYOR
PETER GOERS
LICENSE NO. 44110
EM: pgoers@alliant-inc.com

LANDSCAPE ARCHITECT
MARK KRONBECK
LICENSE NO. 26222
EM: mkronbeck@alliant-inc.com

SHEET INDEX

NO.	SHEET TITLE
1	COVER SHEET
2	EXISTING CONDITIONS SURVEY
3-4	DETAILS
5-7	SITE LIGHTING AND SIGNAGE PLAN
8	LANE STRIPING PLAN
9-11	GRADING AND DRAINAGE PLAN
12	TYPICAL PAD - GRADING DETAILS
13-14	GAS PIPELINE PLAN AND PROFILE
15-16	TRAIL PLAN AND PROFILE
17	EROSION AND SEDIMENT CONTROL PLAN
18	SANITARY SEWER AND WATERMAIN PLAN
19-23	SANITARY SEWER AND WATERMAIN PLAN AND PROFILES
24	STORM SEWER PLAN
25-31	STREET AND STORM SEWER PLAN AND PROFILES
32	OUTLET CONTROL STRUCTURE DETAILS
33	REGIONAL STORM SEWER PLAN
34	STREET INTERSECTION DETAILS
35	TURN LANE PLAN
36-38	LANDSCAPE PLAN
39	LANDSCAPE SCHEDULE AND NOTES

FOR REVIEW ONLY
PRELIMINARY
NOT FOR CONSTRUCTION

ALLIANT
733 Marquette Avenue
Suite 700
Minneapolis, MN 55402
612.758.3080
www.alliant-inc.com

CANVAS AT INVER GROVE HEIGHTS
INVER GROVE HEIGHTS, MINNESOTA
FINAL PLAT - PHASE 1
COVER SHEET

I hereby certify that this plan, specification, or report was prepared by me or under my direct supervision and that I am a duly Licensed PROFESSIONAL ENGINEER under the laws of the State of MINNESOTA

MARK RAUSCH, PE

Date License No.

QUALITY ASSURANCE/CONTROL

BY DATE

DATE	ISSUE
11-16-2020	FINAL PLAT-PH1 SUBMITTAL

PROJECT TEAM DATA

DESIGNED: MPR
DRAWN: SIL, TAS
PROJECT NO: 220-0092

Drawing name: G:\pw_working\projectwise\mwregional\dms24793\200092cove.dwg Nov 16, 2020 - 4:09pm

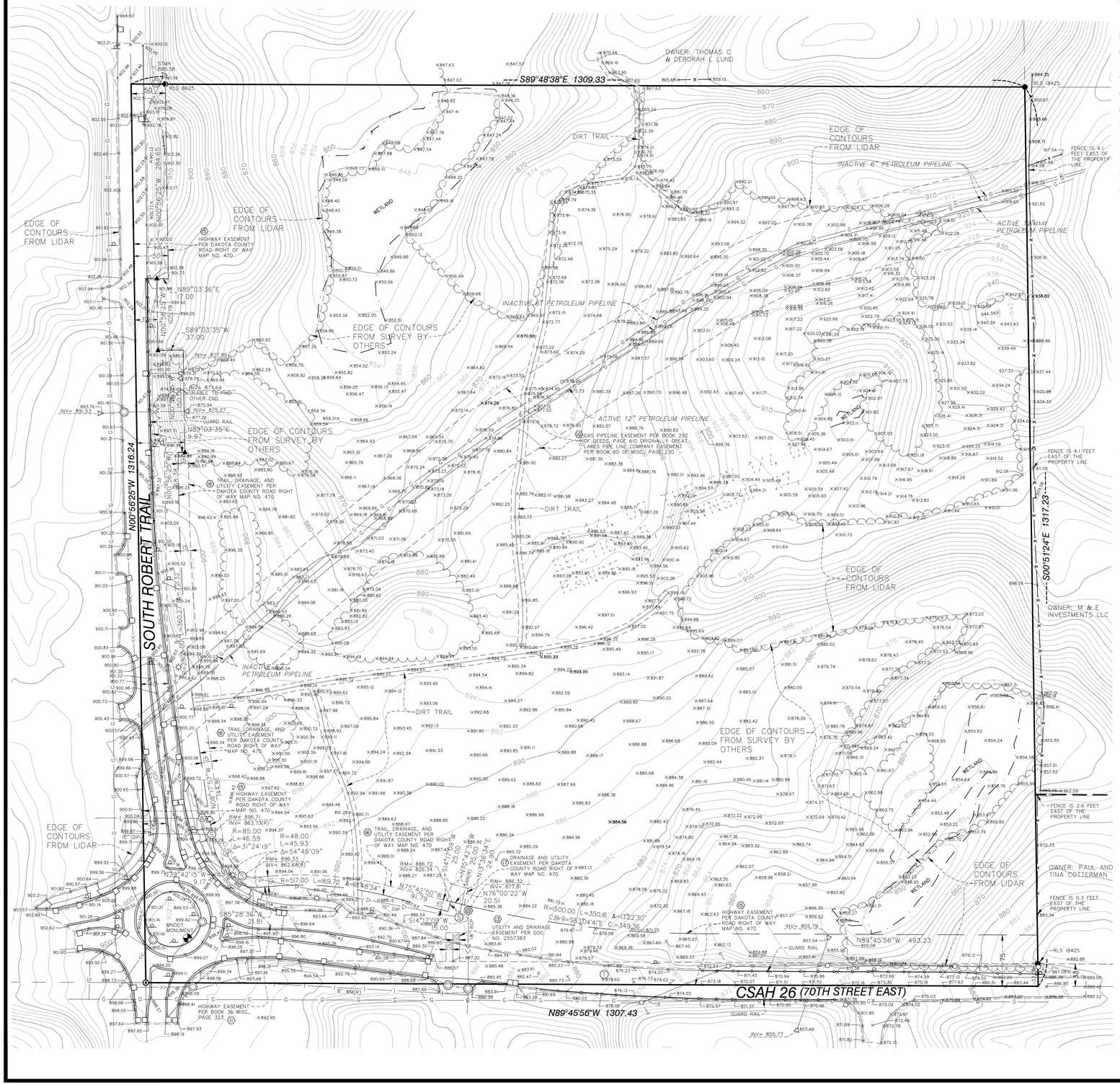

TABLE A ITEMS

1. Monuments placed (or a reference monument or witness to the corner) at all major corners of the boundary of the property, unless already marked or referenced by existing monuments or witnesses to the corner are shown hereon.
2. There is no assigned address to subject property per the Dakota County GIS tax records.
3. The property lies within an area of minimal flood hazard and does not have a printed map according to the Federal Emergency Management Agency (FEMA) website.
4. The area of the above described property is 1,722,460 square feet or 39.542 acres.
5. Vertical relief per contour intervals, datum, and originating benchmark are shown herein.
8. Substantial features observed in the process of conducting fieldwork, are shown hereon.
11. The locations of existing utilities on or serving the property are depicted based on Gopher State One Call Ticket No. 201401684, available city maps, records and observed evidence locations. Lacking excavation, underground utility locations may not be exact. Verify critical utilities prior to construction or design.
13. Names of adjoining owners are depicted based on Dakota County GIS tax information.
16. No evidence of recent earth moving work at the time our field work was performed.
18. Wetland delineated by Westwood Professional Services, Inc. on 4/20/15. Delineation re-approved by Dakota County SWCD, valid through 6/8/2025.

VICINITY MAP

NOT TO SCALE

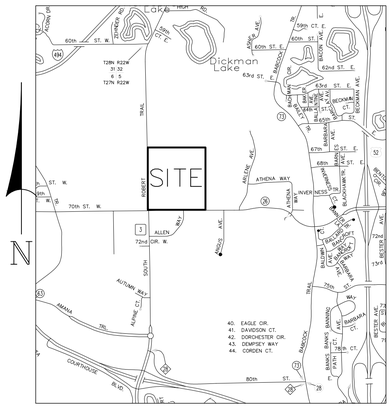

LEGEND

- FOUND ALUMINUM MONUMENT
- FOUND IRON
- FOUND NAIL
- FIRE HYDRANT
- WATER VALVE
- LIGHT POLE
- SANITARY MANHOLE
- SIGN
- POWER POLE
- STORM MANHOLE
- SPOT ELEVATION
- CATCH BASIN
- WATER MANHOLE
- FLARED END SECTION
- BENCHMARK
- PER RECORD DRAWING
- EXCEPTION NUMBER
- SANITARY SEWER
- GAS LINE
- OVERHEAD ELECTRIC
- WATERMAIN
- STORM SEWER
- FENCE
- GUARD RAIL
- DELINEATED WETLAND
- EDGE OF TREES

PROPERTY DESCRIPTION

The Southwest Quarter of the Southwest Quarter of Section 5, Township 27, Range 22, Dakota County, Minnesota.

Abstract Property

CERTIFICATION

To Watermark Equity Group, LLC, an Illinois limited liability company; IMH Special Asset NT 175-IGH, LLC, and Arizona limited liability company; and Commercial Partners Title, LLC as agent for Old Republic National Title Insurance Company:

This is to Certify that this map or plat and the survey on which it is based were made in accordance with the 2016 Minimum Standard Detail Requirements for ALTA/NSPS Land Title Surveys, jointly established and adopted by ALTA and NSPS, and includes Items 1, 2, 3, 4, 5, 8, 11, 13, 16 and 18 of Table A thereof. The field work was completed on June 8, 2020.

Date of Plat or Map: _____

REVIEW COPY

Peter D. Goers, Professional Land Surveyor
Minnesota License No. 44110
Email: pgoers@alliant-inc.com

NOTES

1. This survey and the property description shown here on are based upon information found in the commitment for title insurance prepared by Commercial Partners Title, LLC as agent for Old Republic National Title Insurance Company, file no. 57189, dated May 7, 2020.

2. The locations of underground utilities are depicted based on Gopher State One Call, available city maps, records and field locations and may not be exact. Verify critical utilities prior to construction or design.

3. The basis of bearings is based on Dakota County Coordinate System NAD83 (96 adj.).

4. All distances are in feet.

5. Benchmark: MnDOT monument 1908 E, in southeast section of the center roundabout island having an elevation of 897.56 feet NAVD 88.

6. Survey related exceptions set forth in Schedule B, Section Two of the Title Commitment:

Item no. 10 references an Easement for pipe line purposes, in favor of Great Lakes Pipe Line Company, its successors and assigns, as created in document dated March 13, 1931, filed May 8, 1931, in Book 41 of Miscellaneous, Page 323.
Amended by Partial Release of Right of Way Agreement dated August 24, 1965, filed September 13, 1965, in Book 60 of Miscellaneous, Page 230.
Assigned to Williams Brothers Pipe Line Company by Deed dated March 15, 1966, filed April 4, 1966, in Book 292 of Deeds, Page 323. *Documents are not available and information is depicted per survey provided by others.*

Item no. 11 references Terms and conditions of and easements contained in Highway Easement, dated February 18, 1928, filed April 10, 1928, in Book 36 of Miscellaneous, Page 323. *Documents are not available and information is depicted per survey provided by others*.

Item no. 12 references Subject to the right of way of County State Aid Highway No. 26 (East 70th Street) as presently laid out and traveled. *Depicted on survey*.

Item no. 13 references an Easement for permanent utility and drainage purposes, in favor of the City of Inver Grove Heights, a Minnesota municipal corporation, as created in Permanent Utility and Drainage Easement and Temporary Construction Easement dated October 5, 2007, filed November 21, 2007, as Document No. 2557383. *Depicted on survey*.

Item no. 14 references Terms and conditions of and easements contained in Encroachment Agreement dated August 6, 2012, filed August 10, 2012, as Document No. 2886577, by and between Magellan Pipeline Company, L.P., a Delaware limited partnership, and Zayo Group, LLC, a Delaware limited liability company. *Not plottable*.

Item no. 15 references an Easement for highway purposes, in favor of Dakota County, as created in Highway Easement dated December 19, 2017, filed January 9, 2018, as Document No. 3231653. The easement is depicted in Parcel 4 of Dakota County Road Right of Way Map No. 470 filed January 9, 2018, as Document No. 3231649. *Depicted on survey.*

Item no. 16 references an Easement for trail, drainage and utility purposes, in favor of Dakota County, as created in Trail, Drainage Utility Easement dated December 19, 2017, filed January 9, 2018, as Document No. 3231655. The easement is depicted in Parcel 4 of Dakota County Road Right of Way Map No. 470 filed January 9, 2018, as Document No. 3231649. *Depicted on survey.*

Item no. 17 references an Easement for drainage and utility purposes, in favor of Dakota County, as created in Drainage and Utility Easement dated December 19, 2017, filed January 9, 2018, as Document No. 3231656. The easement is depicted in Parcel 4 of Dakota County Road Right of Way Map No. 470 filed January 9, 2018, as Document No. 3231649. *Depicted on survey.*

Item no. 18 references Terms and conditions of and easements contained in Encroachment Agreement dated April 24, 2019, filed May 17, 2019, as Document No. 3305267, by and between Magellan Pipeline Company, L.P., a Delaware limited partnership, and Dakota County, a political subdivision of the State of Minnesota. *Not plottable.*

N

0 40 80 160
SCALE IN FEET

ALLIANT ENGINEERING
733 Marquette Ave, Ste 700
Minneapolis, MN 55402
612.758.3080 MAIN
612.758.3099 FAX
www.alliant-inc.com

ALTA/NSPS LAND TITLE SURVEY

ROBERT TRAIL AND 70TH STREET EAST

INVER GROVE HEIGHTS, MINNESOTA

DRAWN BY	MDT
CHECKED BY	PDG
DATE ISSUED	06/15/2020
SCALE	1"=80'
JOB NO.	20-0092
FIELD	DA

Drawing name: C:\pw_working\projectwise\mwregionld\dms07173\200092alta.dwg Nov 16, 2020 – 3:14pm

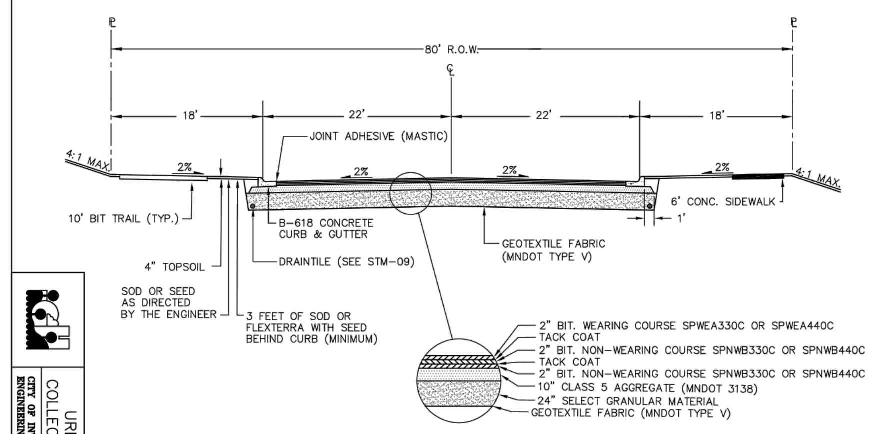

1. ALL RADII SHALL BE B6 CURB AND GUTTER WITH 10' TRANSITIONS FROM EACH SIDE OF RADIUS.
2. FOR CATCHBASIN TRANSITIONS SEE STR-07
3. DRAINTILE SHALL BE INSTALLED AT ALL CATCHBASINS AND AS DIRECTED BY THE ENGINEER.
4. BOTH CONCRETE SIDEWALK AND BITUMINOUS TRAIL TO BE INSTALLED ON URBAN COLLECTOR STREETS.
5. TRAIL SHALL BE INSTALLED ON THE NORTH AND EAST SIDE OF STREET.
6. SIDEWALK TO BE INSTALLED ON THE SOUTH AND WEST SIDE OF STREET.
7. SEE STR-15 FOR TRAIL AND SIDEWALK SECTIONS
8. SIDEWALK AND TRAIL TYPICALLY PLACED 1' FROM PROPERTY LINE.
9. MUST MAINTAIN A MINIMUM OF 6' BOULEVARD FOR SNOW STORAGE.
10. JOINT ADHESIVE (MASTIC) SHALL BE APPLIED TO THE FACE OF THE GUTTER PAN PRIOR TO PLACING WEAR COURSE

URBAN STREET DESIGN COLLECTOR STREET W/ SIDEWALK
CITY OF INVER GROVE HEIGHTS ENGINEERING DEPARTMENT | 1/20 | PLATE NO. STR-01

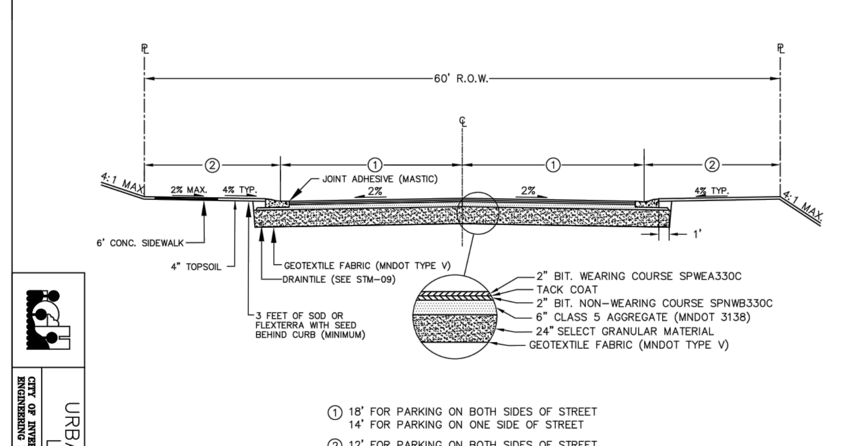

① 18' FOR PARKING ON BOTH SIDES OF STREET
14' FOR PARKING ON ONE SIDE OF STREET

② 12' FOR PARKING ON BOTH SIDES OF STREET
16' FOR PARKING ON ONE SIDE OF STREET

1. ALL RADII SHALL BE B6 CURB AND GUTTER WITH 10' TRANSITIONS FROM EACH SIDE OF RADIUS.
2. FOR CATCHBASIN TRANSITIONS SEE STR-07
3. DRAINTILE SHALL BE INSTALLED AT ALL CATCHBASINS AND AS DIRECTED BY THE ENGINEER.
4. BOTH CONCRETE SIDEWALK AND BITUMINOUS TRAIL TO BE INSTALLED ON URBAN COLLECTOR STREETS.
5. TRAIL SHALL BE INSTALLED ON THE NORTH AND EAST SIDE OF STREET.
6. SIDEWALK TO BE INSTALLED ON THE SOUTH AND WEST SIDE OF STREET.
7. SEE STR-15 FOR TRAIL AND SIDEWALK SECTIONS
8. SIDEWALK AND TRAIL TYPICALLY PLACED 1' FROM PROPERTY LINE.
9. MUST MAINTAIN A MINIMUM OF 6' BOULEVARD FOR SNOW STORAGE.
10. IF STREET IS PLACED ON A 50' RIGHT OF WAY A SIDEWALK EASEMENT WILL BE REQUIRED TO MAINTAIN THE 6' BOULEVARD FOR SNOW STORAGE.
11. JOINT ADHESIVE (MASTIC) SHALL BE APPLIED TO THE FACE OF THE GUTTER PAN PRIOR TO PLACING WEAR COURSE

URBAN STREET DESIGN LOCAL STREET
CITY OF INVER GROVE HEIGHTS ENGINEERING DEPARTMENT | 1/20 | PLATE NO. STR-02

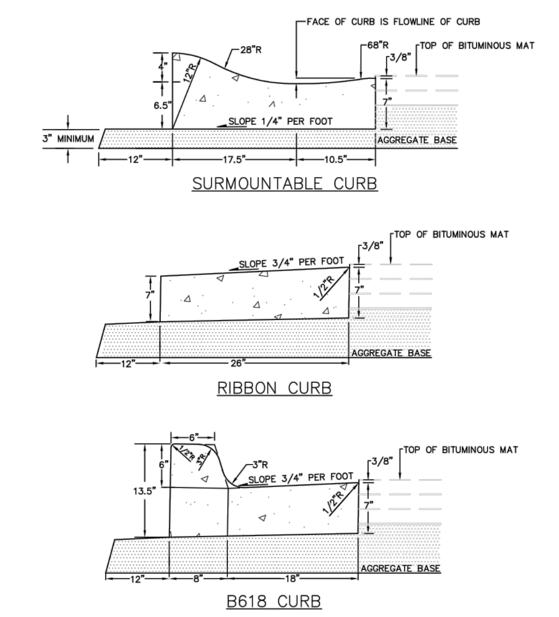

NOTES: 1. FOR CATCH BASIN TRANSITIONS SEE PLATE NO. STR-07.
2. EXPANSION SHALL BE PLACED EVERY 200 LF, AT ALL CATCH BASIN TRANSITIONS, AND AT ALL BEGINNING RADII.
3. CONTRACTION JOINTS SHALL BE PLACED EVERY 10 FEET.
4. FOUR #4 REINFORCING RODS, TWO PER SIDE, AT ALL CATCH BASINS, MINIMUM 10 FEET.
5. ONE #4 REINFORCING ROD IN FRONT OF CASTING, MINIMUM 5 FEET FOR SURMOUNTABLE CURB.

CURB & GUTTER
CITY OF INVER GROVE HEIGHTS ENGINEERING DEPARTMENT | 1/17 | PLATE NO. STR-06

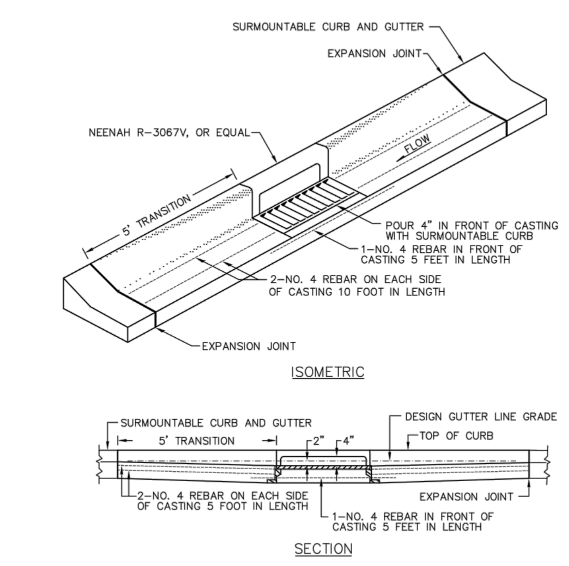

NOTES: 1. SURMOUNTABLE CURB AND GUTTER TO BE FORMED INTO B618 CURB AT CATCH BASINS.
2. ALL CATCH BASINS SHALL HAVE 4" OF CONCRETE IN FRONT OF CASTING.
3. VANES SHALL BE PLACED TO INTERCEPT STORM WATER.
4. IF CATCH BASIN FALLS IN DRIVEWAY USE NEENAH 3501-T OR EQUAL (SURMOUNTABLE CURB).
5. CATCH BASIN GRATE SHALL BE DEPRESSED 2" BELOW DESIGN GUTTER LINE GRADE. (MAINTAIN GRADE AT TOE OF CURB).
6. IF CURB IS B618, TRANSITION FROM 26" TO 24" IN THE ADJOINING 10'.

CATCH BASIN TRANSITION
CITY OF INVER GROVE HEIGHTS ENGINEERING DEPARTMENT | 10/16 | PLATE NO. STR-07

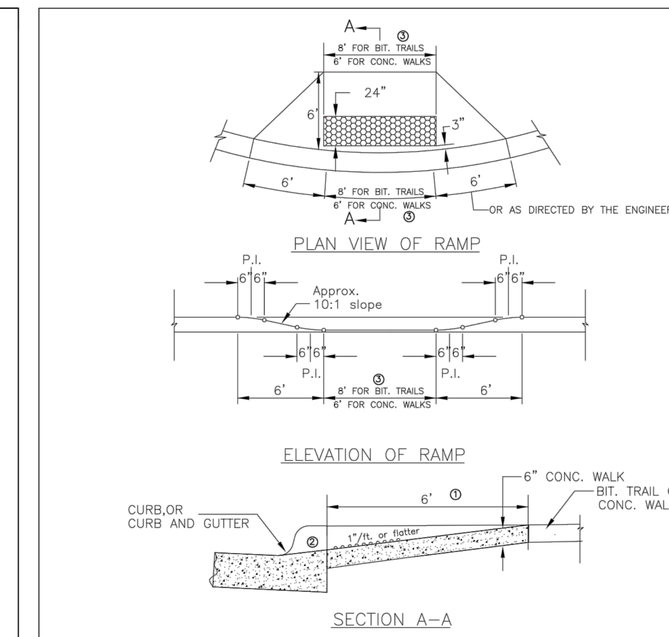

NOTES:
PEDESTRIAN CURB RAMPS SHALL BE PAID FOR AT THE CONTRACT UNIT PRICE PER EACH. THE RAMP AND TRUNCATED DOME AREA WILL BE INCLUDED IN THE PER EACH COST. THE AREA INCLUDED FOR PAYMENT OF THE PEDESTRIAN CURB RAMP IS THE ENTIRE AREA OF THE RAMP (6' BACK FROM THE CURB) AND INCLUDES BOTH THE TRUNCATED DOME PORTION AND REGULAR CONCRETE FLATWORK IN THE PAY AREA. ANY LANDING AREA BEHIND THE PEDESTRIAN RAMP WILL BE PAID FOR AS CONCRETE WALK. TRUNCATED DOME SHALL BE NON-PAINTED, CAST GRAY IRON, NEENAH R-4984 (DETECTABLE WARNING PLATE) OR EQUAL

① 6' DIMENSION MAY BE INCREASED TO PROVIDE A 1"/FT. OR FLATTER SLOPE.
② THE 1"/FT. SLOPE SHALL EXTEND THROUGH THE CURB TO THE GUTTER WITH NO LIP AT THE GUTTER SECTION.
③ THE 6' OR 8' DIMENSION MAY BE MODIFYED AT THE DIRECTION OF THE CITY ENGINEER FOR RETROFIT PROJECTS.

PEDESTRIAN CURB RAMP
CITY OF INVER GROVE HEIGHTS ENGINEERING DEPARTMENT | 4/11 | PLATE NO. STR-12

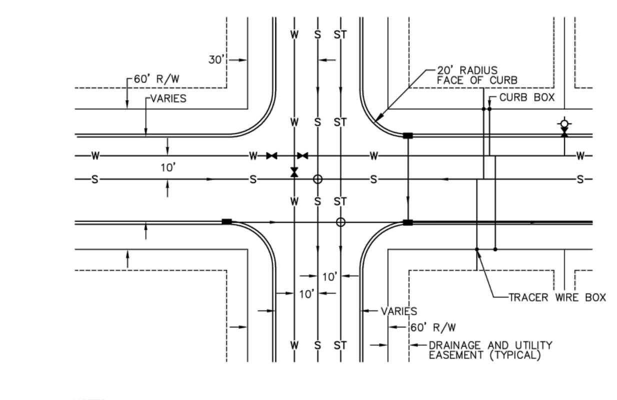

NOTES:
1. A PERMIT IS REQUIRED TO WORK IN THE PUBLIC ROW. THIS INCLUDES INSTALLATION OF SMALL UTILITIES. CONTACT THE CITY OF IGH'S ENGINEERING DEPARTMENT TO OBTAIN THE PERMIT OR FOR FURTHER INFORMATION 651-450-2500.
2. ALL UTILITIES INCLUDING ABOVE GROUND TRANSFORMERS AND PEDESTALS TO BE IN EASEMENT, BUT LOCATED A MINIMUM OF 10' FROM CITY FACILITIES OR STRUCTURES.

SANITARY SEWER
1. SANITARY SEWER SHALL BE PLACED ON CENTERLINE.
2. SANITARY MANHOLES SHALL BE SPACED A MAXIMUM OF 400 FEET.
3. SANITARY SERVICES TO BE LOCATED DOWNSTREAM OF WATERMAIN SERVICES.
4. SANITARY SERVICES SHALL BE INSTALLED WITH TRACER WIRE BOXES

WATERMAIN
1. WATERMAIN OFFSET 10' NORTH OR WEST OF CENTERLINE.
2. HYDRANTS SHALL BE LOCATED 4' BACK OF CURB.
3. CURB BOX TO BE INSTALLED AT THE PROPERTY LINE.
4. WATERMAIN SERVICES TO BE LOCATED UPSTREAM FROM SANITARY SERVICES.

STORM SEWER
1. STORM SEWER SHALL BE PLACED 10' SOUTH OR EAST OF CENTERLINE OR UNDER CURB ON OPPOSITE SIDE OF WATERMAIN.
2. CATCH BASINS TO BE AT END OF RADIUS.

INTERSECTION DETAIL
CITY OF INVER GROVE HEIGHTS ENGINEERING DEPARTMENT | 3/15 | PLATE NO. STR-13

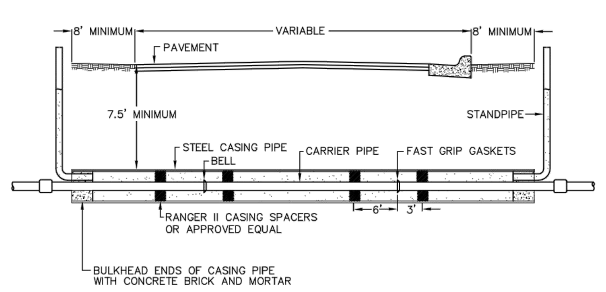

NOTES: 1. CASING PIPE TO BE WELDED STEEL WITH A MINIMUM YIELD STRENGTH OF 35,000 PSI. STEEL CASING PIPE COATING PER ASTM A139, GRADE B RED MILL ON THE INSIDE AND OUTSIDE OF THE PIPE SHALL BE COAL TAR ENAMEL COATED PER AWWA C203.
2. STANDPIPE SHALL BE CUT OFF AND CAPPED 2' BELOW FINISHED GRADE .
3. WATER MAIN CONDUCTIVITY SHALL MEET CITY SPEC 1034.2.7.A

PIPE SIZE CHART

CARRIER PIPE	CASING DIAMETER	CASING THICKNESS
6"	24	0.250
8"	24"	0.250
10"	24"	0.312
12"	24"	0.375
18"	30"	0.438
24"	40"	0.500

JACKING DETAIL
CITY OF INVER GROVE HEIGHTS ENGINEERING DEPARTMENT | 3/15 | PLATE NO. STR-14

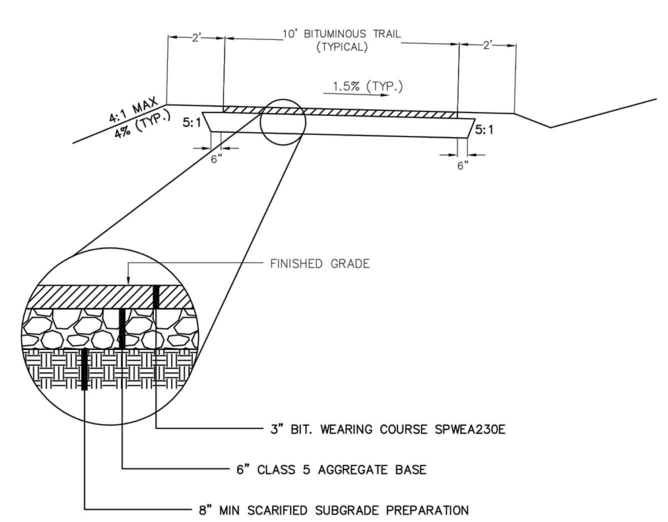

BITUMINOUS TRAIL
CITY OF INVER GROVE HEIGHTS ENGINEERING DEPARTMENT | 3/19 | PLATE NO. STR-15

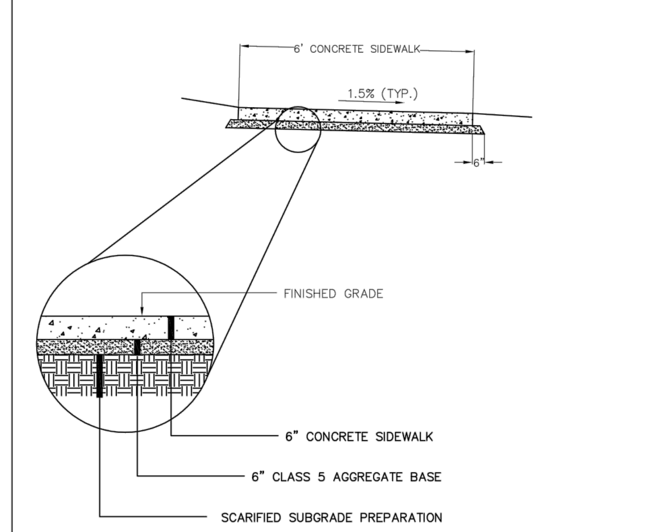

CONCRETE PANELS SHALL NOT EXCEED 6' IN ANY DIRECTION

CONCRETE SIDEWALK
CITY OF INVER GROVE HEIGHTS ENGINEERING DEPARTMENT | 3/19 | PLATE NO. STR-19

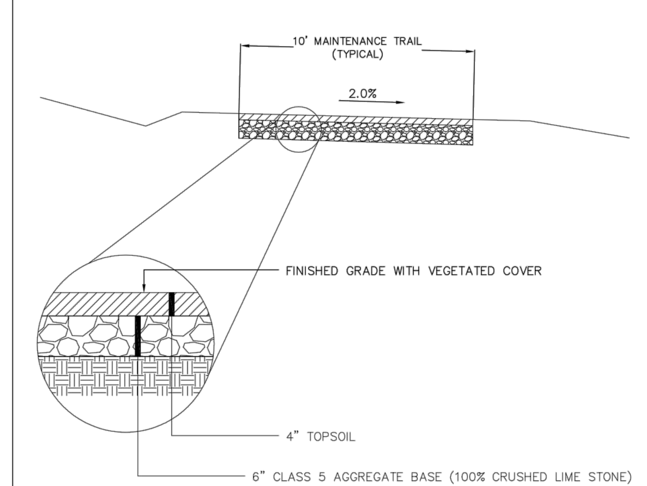

MAINTENANCE ACCESS ROAD
CITY OF INVER GROVE HEIGHTS ENGINEERING DEPARTMENT | 3/16 | PLATE NO. STR-21

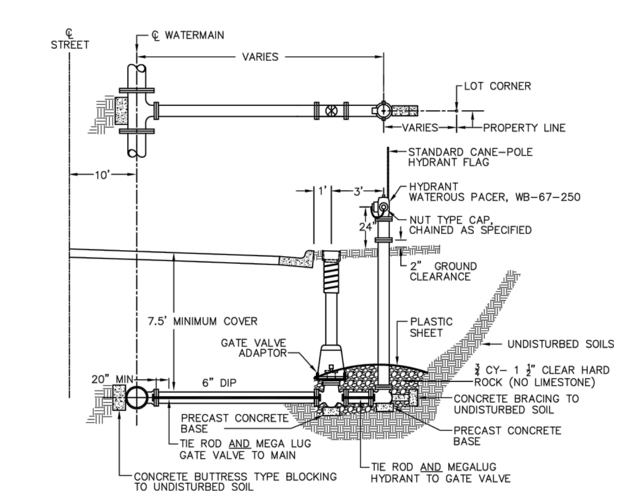

NOTES: 1. ALL HYDRANTS MUST BE 8.0' BURY UNLESS SHOWN OTHERWISE.
2. HYDRANT VALVES TO BE LOCATED 3' FROM HYDRANT.
3. GATE VALVES TO CONFORM WITH AWWA C509-80 STANDARDS.
4. TIE RODS TO BE 5/8" DIAMETER THREADED STEEL.
5. ALL TIE RODS TO BE SPRAYED WITH A BITUMINOUS COAL TAR PROTECTIVE COATING I.E. LOCTITE HEAVY DUTY RUBBERIZED UNDERCOATING, OR APPROVED EQUAL.
6. ALL WATERMAIN BOLTS ARE CORE-BLUE OR APPROVED EQUAL.
7. POURED CONCRETE OR PRECAST BLOCKS TO BE USED FOR BRACING. (NO WOOD, CURBING, SIDEWALK, ETC.)
8. ALL JOINTS MUST BE RESTRAINED. GATE VALVE TO BE RODDED TO MAIN
HYDRANT TO BE RODDED TO GATE VALVE
HYDRANT SHALL NOT BE RODDED TO MAIN
9. VERTICAL OFFSETS ARE NOT PERMITTED WITHOUT PERMISSION OF THE ENGINEER.

HYDRANT INSTALLATION
CITY OF INVER GROVE HEIGHTS ENGINEERING DEPARTMENT | 3/15 | PLATE NO. WTR-01

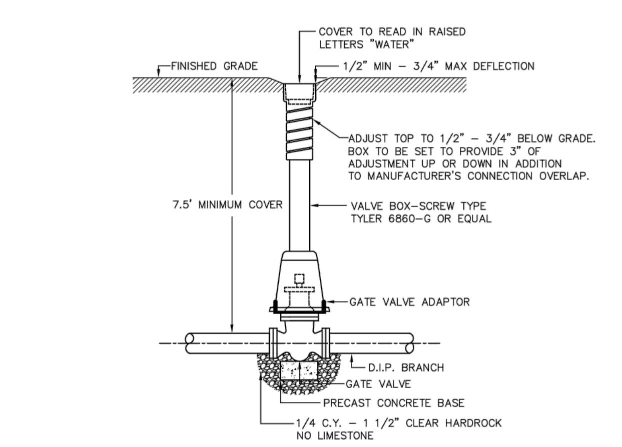

NOTES: 1. HYDRANT, STUB, & SERVICE VALVES SHALL BE RODDED TO THE MAIN.
2. GATE VALVES TO CONFORM WITH AWWA C509-80 STANDARDS.
3. TIE RODS TO BE 5/8" DIAMETER THREADED STEEL.
4. ALL TIE RODS TO BE SPRAYED WITH A BITUMINOUS COAL TAR PROTECTIVE COATING I.E. LOCTITE HEAVY DUTY RUBBERIZED UNDERCOATING, OR APPROVED EQUAL.
5. ALL WATERMAIN BOLTS ARE CORE-BLUE OR APPROVED EQUAL.
6. NO INSIDE ADJUSTMENT SECTIONS ALLOWED (IE. NO INSERTS).
7. MARKING POST SHALL BE INSTALLED AT ALL GATE VALVES LOCATED OUTSIDE OF STREET SECTIONS. SEE PLATE NO. MISC-01.

VALVE BOX INSTALLATION
CITY OF INVER GROVE HEIGHTS ENGINEERING DEPARTMENT | 2/14 | PLATE NO. WTR-02

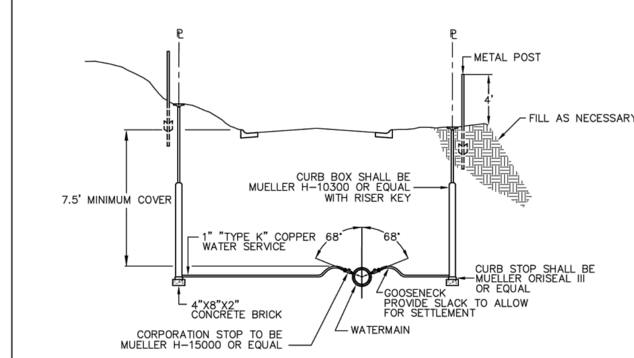

NOTES: 1. NO COPPER TO COPPER CONNECTIONS SHALL BE MADE IN THE PUBLIC RIGHT OF WAY.
2. COPPER SERVICE SHALL NOT EXTEND BEYOND THE CURB BOX (NO PIGTAILS).
3. INSTALL CURB BOX WITH RISER KEY.
4. CURB BOX TO BE PLACED AT HALF EXTENSION.
5. FORD TYPE A-1 SINGLE LID COVER (4" BURY DEPTH) OR EQUAL FOR CURB BOXES IN DRIVEWAYS, SIDEWALKS, OR PARKING AREAS.
6. INSTALL METAL TEE FENCE POST 6" TO 12" BEHIND CURB BOX LOCATION. FENCE POST SHALL BE GREEN WITH TOP PAINTED BLUE.

TYPICAL RESIDENTIAL WATER SERVICE
CITY OF INVER GROVE HEIGHTS ENGINEERING DEPARTMENT | 4/11 | PLATE NO. WTR-03

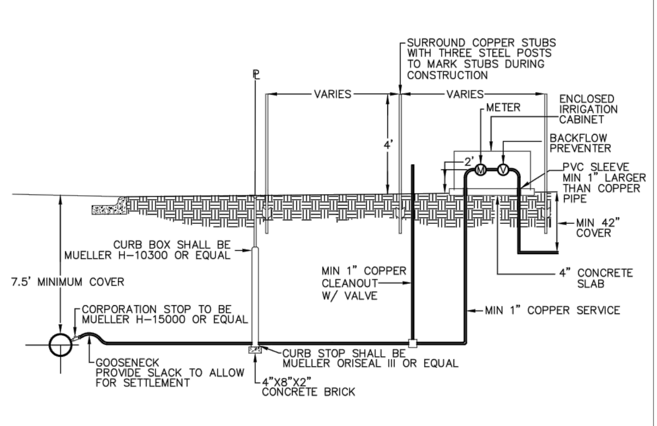

NOTES: 1. NO COPPER TO COPPER CONNECTIONS SHALL BE MADE IN THE PUBLIC RIGHT OF WAY.
2. INSTALL CURB BOX WITH RISER KEY.
3. CURB BOX TO BE PLACED AT HALF EXTENSION.
4. FORD TYPE A-1 SINGLE LID COVER (4" BURY DEPTH) OR EQUAL FOR CURB BOXES IN DRIVEWAYS, SIDEWALKS, OR PARKING AREAS.
5. INSTALL METAL TEE FENCE POST 6" TO 12" BEHIND CURB BOX LOCATION. FENCE POST SHALL BE GREEN WITH TOP PAINTED BLUE.

IRRIGATION SERVICE
CITY OF INVER GROVE HEIGHTS ENGINEERING DEPARTMENT | 9/16 | PLATE NO. WTR 04

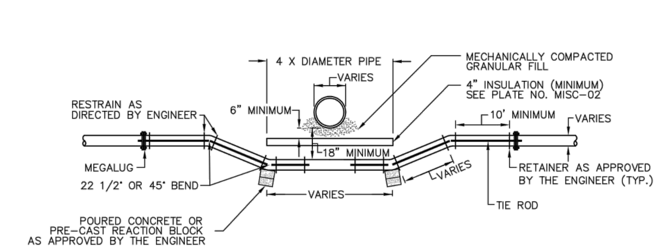

NOTE: 1. ALL TIE RODS TO BE SPRAYED WITH A BITUMINOUS COAL TAR PROTECTIVE COATING (I.E. LOCTITE HEAVY DUTY RUBBERIZED UNDERCOATING OR APPROVED EQUAL)
2. TIE RODS TO BE 5/8" DIAMETER THREADED STEEL.
3. ALL WATERMAIN BOLTS ARE CORE-BLUE OR APPROVED EQUAL.
4. PVC MEGALUGS WILL BE USED ON ALL CAST IRON PIPE.

WATERMAIN ADJUSTMENT
CITY OF INVER GROVE HEIGHTS ENGINEERING DEPARTMENT | 3/11 | PLATE NO. WTR-05

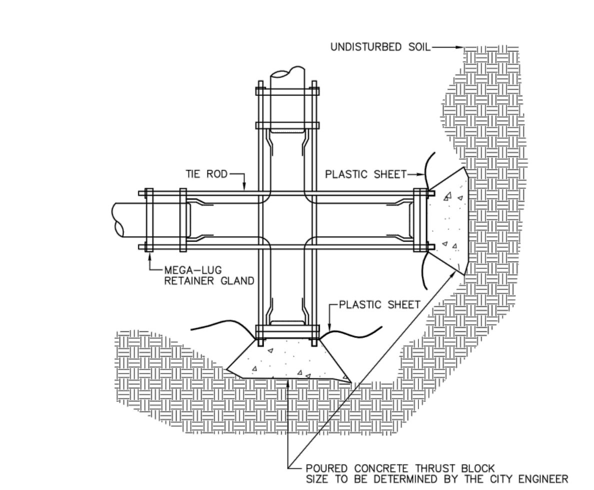

NOTES: 1. TYING BACK PLUG (TIE RODS) SHALL BE DONE IN ADDITION TO THRUST BLOCKING.
2. TIE RODS TO BE 5/8" DIAMETER THREADED STEEL.
3. ALL TIE RODS TO BE SPRAYED WITH A BITUMINOUS COAL TAR PROTECTIVE COATING I.E. LOCTITE HEAVY DUTY RUBBERIZED UNDERCOATING OR APPROVED EQUAL.
4. TYING BACK PLUG IS INCIDENTAL TO WATERMAIN INSTALLATION.
5. ALL WATERMAIN BOLTS ARE CORE-BLUE OR APPROVED EQUAL.
6. POURED CONCRETE OR PRECAST BLOCKS TO BE USED FOR BLOCKING (NO WOOD, CURBING, SIDEWALK, ETC.)
7. PRECAST BLOCKS (MANHOLE BLOCKS OR EQUAL) MAY BE USED ON 6" OR 8" WATERMAIN.
8. PLASTIC SHEETING SHALL BE WRAPPED AROUND PLUG PRIOR TO POURING CONCRETE.
9. CONCRETE SHALL NOT BE POURED AROUND SIDES OF PLUG.
10. CONCRETE SHALL BE 4000 PSI.
11. ALL SERVICE STUBS AND FUTURE WATERMAIN EXTENSIONS MUST HAVE A 1" CORP AND 1" TYPE "K" BLEED OFF AS DIRECTED BY THE CITY ENGINEER.

TYPICAL WATERMAIN PLUG
CITY OF INVER GROVE HEIGHTS ENGINEERING DEPARTMENT | 3/11 | PLATE NO. WTR-06

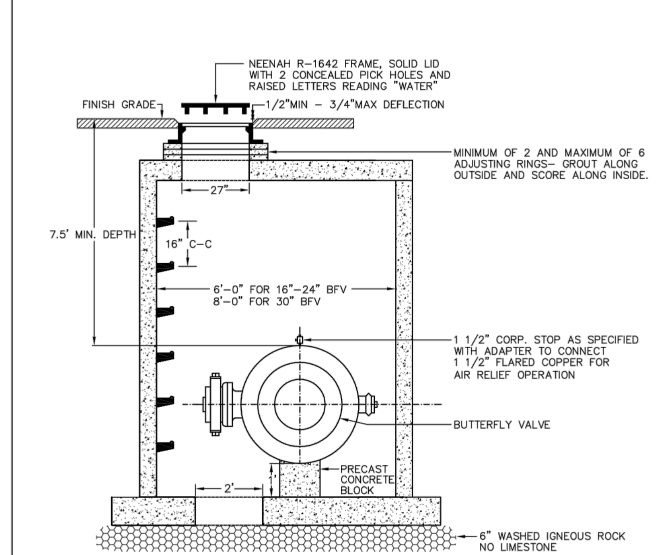

NOTES: 1. OPERATING NUT MUST BE CENTERED UNDER MANHOLE OPENING.
2. GEARBOX MUST BE POSITIONED SO IT IS REMOVABLE AND MAINTAINABLE.
3. MARKING POSTS SHALL BE INSTALLED AT ALL MANHOLES LOCATED OUTSIDE OF STREET RIGHT OF WAYS. SEE PLATE NO. MISC-01.

BUTTERFLY VALVE MANHOLE
CITY OF INVER GROVE HEIGHTS ENGINEERING DEPARTMENT | 2/14 | PLATE NO. WTR-08

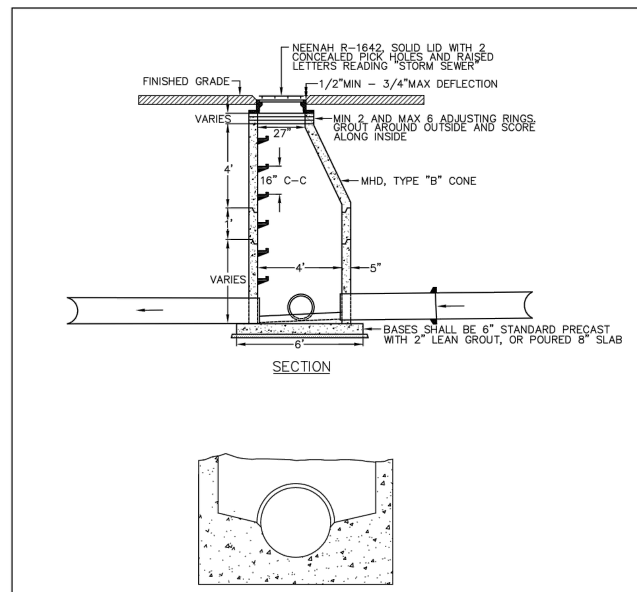

NOTES: 1. ALL MANHOLES MUST BE A MINIMUM OF 4' IN DEPTH.
2. MANHOLE STEPS SHALL BE PLACED SO THAT OFFSET VERTICAL PORTION OF CONE IS FACING DOWNSTREAM.
3. PROVIDE POURED CONCRETE INVERTS AND DOGHOUSES.
4. GROUT ALL LIFT HOLES.
5. MARKING POSTS SHALL BE INSTALLED AT ALL MANHOLES LOCATED OUTSIDE OF STREET SECTION. SEE PLATE NO. MISC-01.
6. MINIMUM 48" DIAMETER WHEN PIPE IS 36" OR SMALLER
MINIMUM 72" DIAMETER WHEN PIPE IS LARGER THAN 36"

STORM STANDARD MANHOLE
CITY OF INVER GROVE HEIGHTS ENGINEERING DEPARTMENT | 8/13 | PLATE NO. STM-01

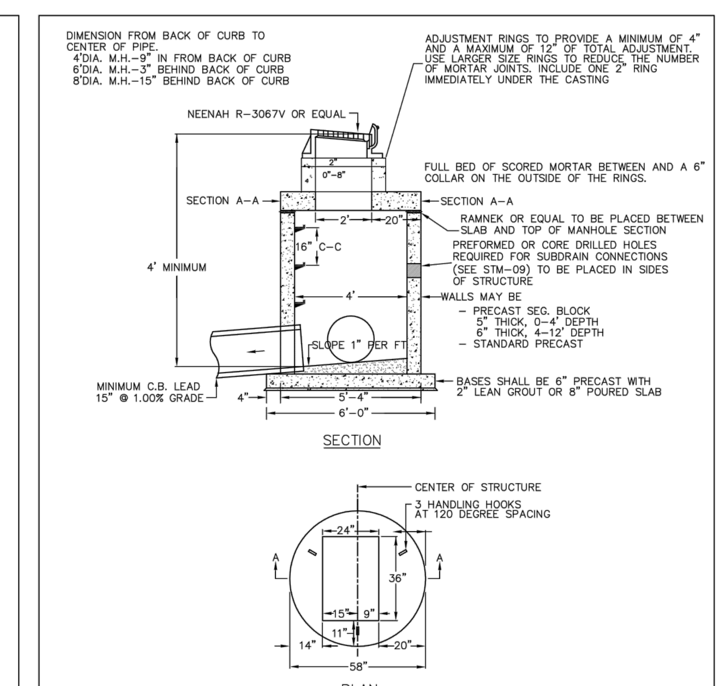

NOTES: 1. ALL CATCH BASIN/MANHOLES MUST BE A MINIMUM OF 4' IN DEPTH.
2. PROVIDE POURED CONCRETE INVERTS AND DOGHOUSES.
3. GROUT ALL LIFT HOLES.
4. DRAINTILE SHALL BE INSTALLED AT ALL CATCH BASINS. SEE PLATE NO. STM-09.
5. STEPS SHALL BE PLACE IN EITHER FRONT CORNER DEPENDING ON PIPE CONFIGURATION.

CATCH BASIN/MANHOLE WITH RECTANGULAR LID
CITY OF INVER GROVE HEIGHTS ENGINEERING DEPARTMENT | 1/17 | PLATE NO. STM-02

(NEENAH CASTING NO. R-3067 WITH TYPE V GRATE OR APPROVED EQUAL)

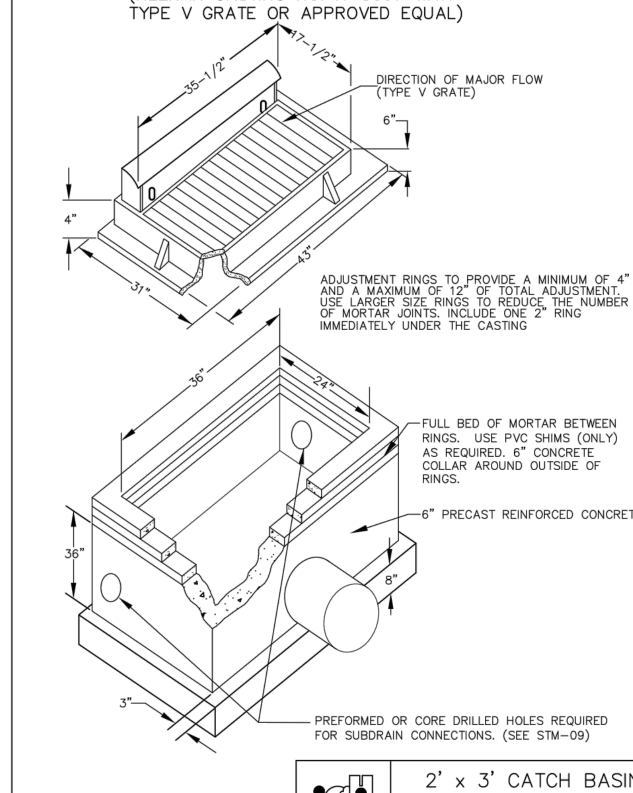

2' x 3' CATCH BASIN
CITY OF INVER GROVE HEIGHTS ENGINEERING DEPARTMENT | 1/17 | PLATE NO. STM-03

ALLIANT
ENGINEERING

733 Marquette Avenue
Suite 700
Minneapolis, MN 55402
612.758.3080
www.alliant-inc.com

CANVAS AT INVER GROVE HEIGHTS

PROJECT ADDRESS 2

FINAL PLAT - PHASE 1

DETAILS

I hereby certify that this plan, specification, or report was prepared by me or under my direct supervision and that I am a duly Licensed PROFESSIONAL ENGINEER under the laws of the State of MINNESOTA

MARK RAUSCH, PE

Date License No.

QUALITY ASSURANCE/CONTROL

BY DATE

DATE	ISSUE

PROJECT TEAM DATA
DESIGNED: MPR
DRAWN: SIL, TAS
PROJECT NO: 220-0092

3

Drawing name: C:\pw_working\projectwise\mwregionld\dms24793\200092detail.dwg Nov 16, 2020 – 3:27pm

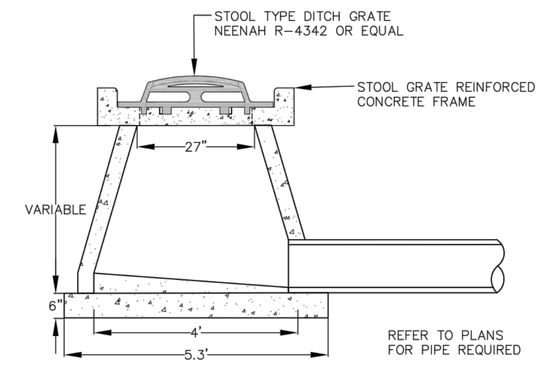

TYPE "G" CATCH BASIN
CITY OF INVER GROVE HEIGHTS ENGINEERING DEPARTMENT | 4/11 | PLATE NO. STM-04

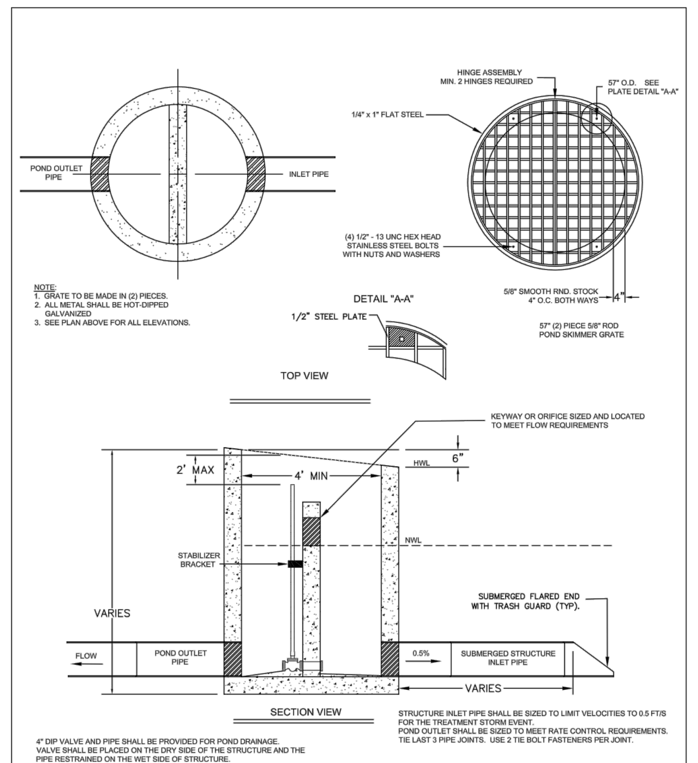

4" DIP VALVE AND PIPE SHALL BE PROVIDED FOR POND DRAINAGE. VALVE SHALL BE PLACED ON THE DRY SIDE OF THE STRUCTURE AND THE PIPE RESTRAINED ON THE WET SIDE OF STRUCTURE. WEIR AND PIPE INTERFACE SHALL BE WATERTIGHT. VALVE SHALL HAVE AN EXTENSION ROD PLACED TO WITHIN 2 FEET OF TOP OF STRUCTURE. ROD SHALL BE STABILIZED TO WEIR WALL WITH A BRACKET.

STRUCTURE INLET PIPE SHALL BE SIZED TO LIMIT VELOCITIES TO 0.5 FT/S FOR THE TREATMENT STORM EVENT. POND OUTLET SHALL BE SIZED TO MEET RATE CONTROL REQUIREMENTS. TIE LAST 3 PIPE JOINTS. USE 2 TIE BOLT FASTENERS PER JOINT.

POND SKIMMER OUTLET (SUBMERGED INLET TYPE)
CITY OF INVER GROVE HEIGHTS ENGINEERING DEPARTMENT | 3/15 | PLATE NO. STM-06

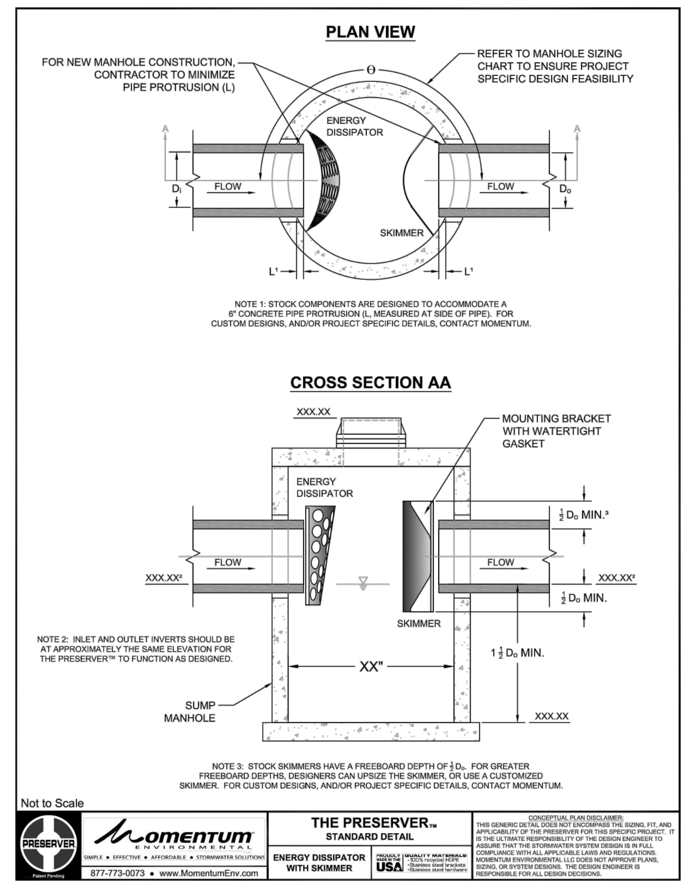

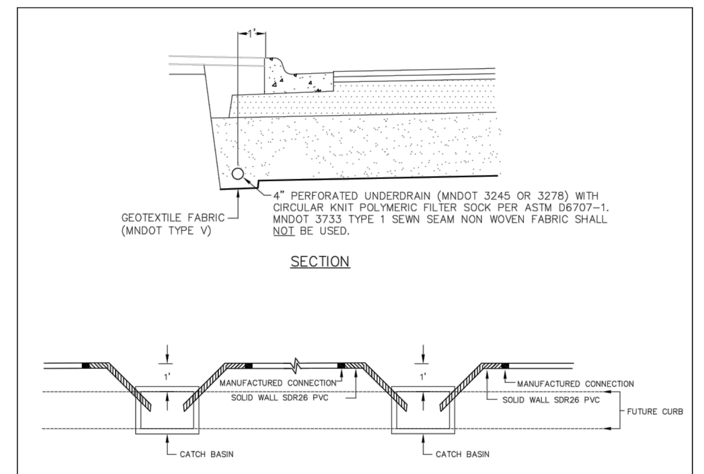

1. DRAINTILE SHALL BE PLACED CONTINUOUS IN BOTH SIDES OF THE STREET FROM CATCHBASIN TO CATCHBASIN. AT TERMINAL CATCHBASINS THE DRAINTILE SHALL BE EXTENDED A MINIMUM OF 30 FEET.
2. THE FIRST 18" AT THE CATCHBASIN SHALL BE NON PERFORATED SOLID WALL SDR 26 PVC. CONNECTIONS BETWEEN PVC AND HDPE SHALL BE MADE WITH MANUFACTURED CONNECTIONS (FERNCO FITTINGS OR EQUAL).
4. DRAINTILE SHALL BE PLACED IN THE DESIGN SECTION OF THE STREET, 6" BELOW SUBGRADE OR AT THE BOTTOM OF THE SELECT GRANULAR SECTION, AND 1' BEHIND THE PROPOSED CURBLINE.
5. DRAINTILE SHALL BE PLACED ON THE STREET SIDE OF THE CATCHBASIN AT THE REQUEST OF THE ENGINEER.
6. DRAINTILE SHALL BE PLACED AT THE SAME TIME THE SELECT GRANULAR SECTION IS PLACED AND FOLLOW THE STREET GRADE.
7. CONNECTIONS TO CATCH BASIN SHALL BE PRE FORMED OR CORE DRILLED. VOIDS AT CONNECTION TO BE GROUTED.
8. IF SUMP DISCHARGE CONNECTIONS ARE BEING INSTALLED, THE DRAIN TILE MUST RIGID PVC TO THE NEXT DOWNSTREAM CATCHBASIN.

STREET DRAINTILE
CITY OF INVER GROVE HEIGHTS ENGINEERING DEPARTMENT | 01/17 | PLATE NO. STM-09

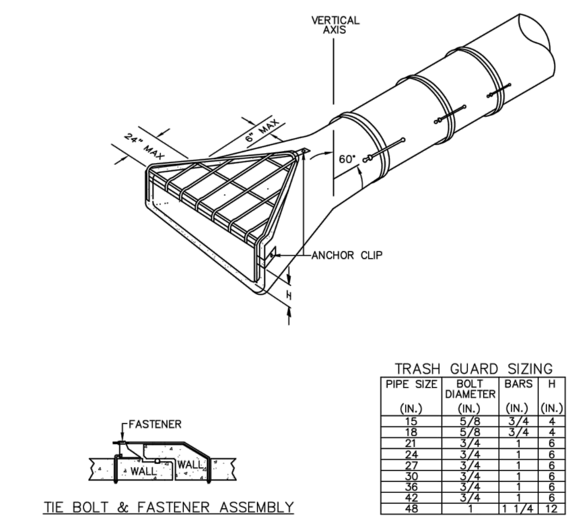

TRASH GUARD SIZING

PIPE SIZE (IN.)	BOLT DIAMETER (IN.)	BARS (IN.)	H (IN.)
15	5/8	3/4	4
18	5/8	3/4	4
21	3/4	1	6
24	3/4	1	6
27	3/4	1	6
30	3/4	1	6
36	3/4	1	6
42	3/4	1	6
48	1	1 1/4	12

NOTES:
1. USE TWO TIE BOLT FASTENERS PER JOINT INSTALLED AT 60° FROM TOP OF PIPE.
2. LAST THREE JOINTS SHALL BE TIED.
3. TYING AND TRASH GUARD SHALL BE INCLUDED IN UNIT PRICE BID FOR END SECTION.
4. BARS AND PLATES ARE HOT-ROLLED STEEL.
5. BARS, PLATES, PIPE, AND BOLTS ARE GALVANIZED.
6. VERTICAL OPENING SHALL BE A MAXIMUM OF 6" AND A MINIMUM OF 4" HIGH
7. FOR RIP RAP PLACEMENT SEE DETAIL STM-12
8. TRASH GUARDS ON 15-18" FLARED END SECTIONS SHALL BE PLACED ON POND OUTLETS ONLY. DO NOT PLACE ON POND INLETS OR CULVERTS.

RIP-RAP REFERENCE CITY PLATE STM-12

STANDARD FLARED END SECTION AND TRASH GUARD
CITY OF INVER GROVE HEIGHTS ENGINEERING DEPARTMENT | 4/17 | PLATE NO. STM-10

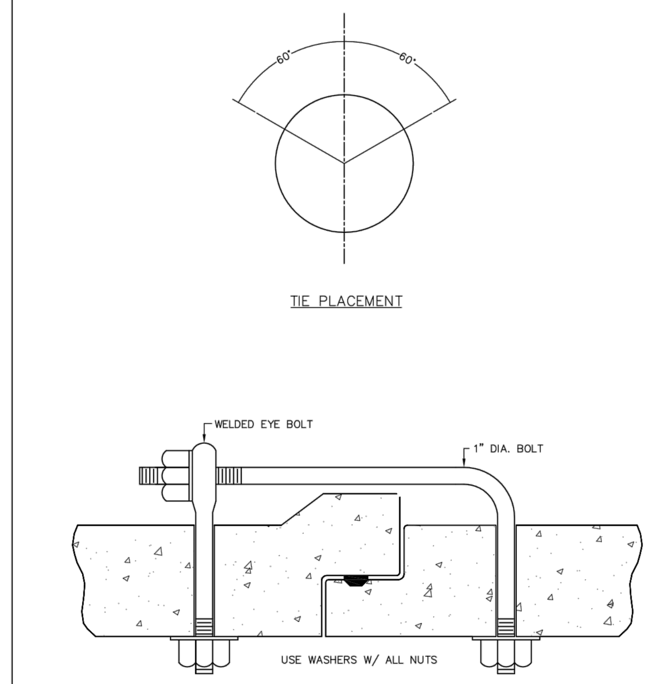

PIPE TIE DETAIL
CITY OF INVER GROVE HEIGHTS ENGINEERING DEPARTMENT | 3/11 | PLATE NO. STM-11

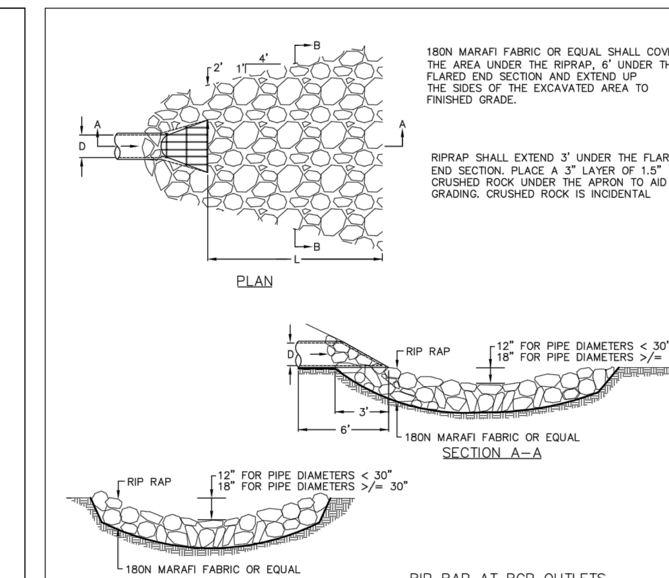

RIP RAP AT RCP OUTLETS

DIAMETER OF ROUND PIPE (IN.)	L (FT.)	CLASS II (6") 12" DEPTH (CY)	CLASS II (6") 6" DEPTH (CY)	CLASS III (9") 18" DEPTH (CY)	CLASS III (9") 9" DEPTH (CY)	CLASS IV (12") 24" DEPTH (CY)	CLASS IV (12") 12" DEPTH (CY)
15	8	3.5	1.8	5.3	2.7	7.0	3.5
18	10	4.5	2.3	6.8	3.4	9.0	4.5
21	10	4.8	2.4	7.3	3.7	9.8	4.9
24	12	6.1	3.1	9.2	4.6	12.3	6.2
27	12	6.5	3.3	9.7	4.9	13.0	6.5
30	14	8.0	4.0	11.9	6.0	15.9	8.0
36	16	10.0	5.0	15.0	7.5	20.0	10.0
42	18	11.7	5.9	17.5	8.8	23.4	11.7
48	20	13.8	6.9	20.70	10.4	27.6	13.8

RIP RAP
CITY OF INVER GROVE HEIGHTS ENGINEERING DEPARTMENT | 2/15 | PLATE NO. STM-12

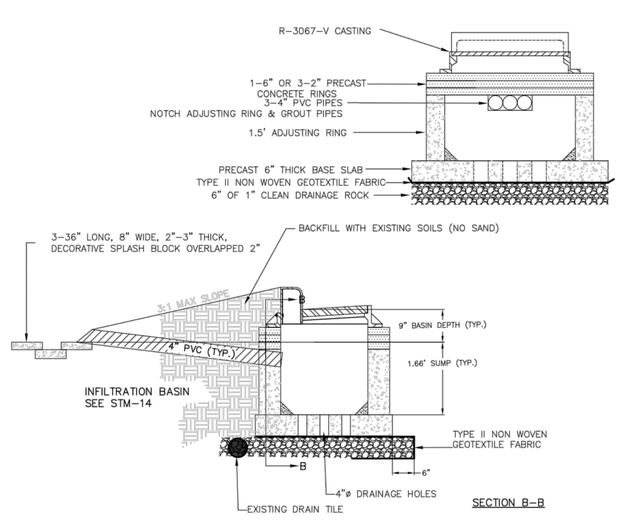

1. INLET CASTING SHALL BE SUMPED 2" FROM NORMAL GUTTER GRADE (SEE STR-07 FOR CURB TRANSITION)
2. BOTTOM SLAB DRAINAGE HOLES TO BE CONSTRUCTED DURING FABRICATION OR CORE DRILLED PRIOR TO PLACEMENT
3. 6" LAYER OF DRAINAGE ROCK SHALL BE PLACED TO ALLOW FLOW FROM UNDER STRUCTURE TO BIORETENTION FACILITY IF NO DRAINTILE IS INSTALLED.
4. PVC PIPE TO BE PLACED WITH REVERSE GRADE. INVERT AT BASIN SHALL BE A MINIMUM OF 1" HIGHER THAN TOP OF PIPE AT STRUCTURE.
5. DECORATIVE SPLASH BLOCKS TO BE SET WITH A 2" OVERLAP AND NO JOINTS MAY BE SET DIRECTLY UNDER PIPE
6. SEDIMENT BASIN STRUCTURE SHALL INCLUDE FRAME AND CASTING, 18" ADJUSTING RING, 6" OR 2" ADJUSTING RINGS, 6" BASE SLAB, DECORATIVE SPLASH BLOCKS, GEOTEXTILE FABRIC, DRAINAGE ROCK AND PVC PIPE.

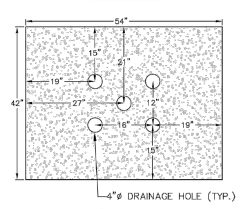

RAINGARDEN CATCH BASIN
CITY OF INVER GROVE HEIGHTS ENGINEERING DEPARTMENT | 4/18 | PLATE NO. STM-13

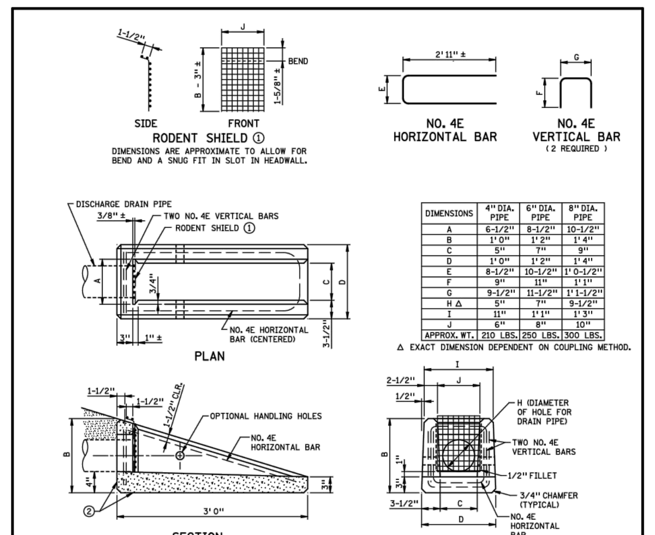

DIMENSIONS	4" DIA. PIPE	6" DIA. PIPE	8" DIA. PIPE
A	6-1/2"	8-1/2"	10-1/2"
B	1' 0"	1' 2"	1' 4"
C	5"	7"	9"
D	1' 0"	1' 2"	1' 4"
E	8-1/2"	10-1/2"	1' 0-1/2"
F	9"	11"	1' 1"
G	9-1/2"	11-1/2"	1' 1-1/2"
H Δ	5"	7"	9-1/2"
I	11"	1' 1"	1' 3"
J	6"	8"	10"
APPROX. WT.	210 LBS.	250 LBS.	300 LBS.

Δ EXACT DIMENSION DEPENDENT ON COUPLING METHOD.

NOTES:

ALL CONCRETE MATERIALS SHALL BE MN/DOT MIX DESIGNATION 3W46 AND/OR OTHER MIX AS APPROVED BY THE STATE MATERIALS ENGINEER. HEADWALLS SHALL NOT BE SHIPPED UNTIL CONCRETE HAS REACHED A COMPRESSIVE STRENGTH OF 5000 PSI. THE EPOXY BARS SHALL BE SECURELY RETAINED SO THEY ARE NOT DISPLACED DURING CONCRETE PLACEMENT. TIE WIRE SHALL BE EPOXY COATED. WELDING WILL NOT BE PERMITTED. THE FABRICATOR SHALL PROVIDE A QUALITY CONTROL PROGRAM APPROVED BY THE MATERIALS ENGINEER.

① THE RODENT SHIELD SHALL BE FABRICATED FROM CARBON STEEL FLATTENED EXPANDED METAL, STYLE 1/2" NO. 4F. IT SHALL BE HOT DIPPED GALVANIZED AFTER FABRICATION. ACTUAL SCREEN DIMENSIONS SHALL BE SUCH AS WILL SNUGLY FIT THE PROVIDED SLOT (TAPERED IF NECESSARY), WITH THE SCREEN LIP FITTING FLUSH WITH THE CASTING TOP AND THE BOTTOM FITTING TIGHT TO THE FLOW LINE.

② THE MANUFACTURER'S NAME AND DATE OF PRODUCTION (MONTH AND YEAR) SHALL BE CLEARLY CAST (NOT INK STAMPED) INTO EITHER THE BOTTOM OF EACH HEADWALL OR NEAR THE BOTTOM OF THE LARGE END. IF A MANUFACTURER HAS MORE THAN ONE PLANT, THEY SHALL BE APPROPRIATELY CODED.

APPROVED AUGUST 20, 2001 — STATE DESIGN ENGINEER
STATE OF MINNESOTA DEPARTMENT OF TRANSPORTATION
PRECAST CONCRETE HEADWALL FOR SUBSURFACE DRAINS
SPECIFICATION REFERENCE 2502 — REVISED 3-22-2013 M.J.F.
STANDARD PLATE NO. 3131C

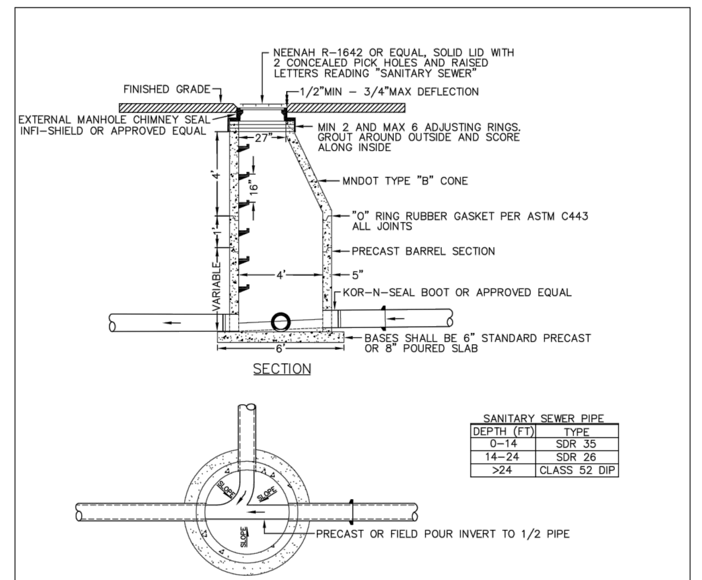

SANITARY SEWER PIPE	
DEPTH (FT)	TYPE
0-14	SDR 35
14-24	SDR 26
>24	CLASS 52 DIP

NOTES:
1. A MINIMUM FALL OF .10' ON MANHOLES THROUGH STRUCTURES AND A MINIMUM FALL OF .20' ON MANHOLES WITH 90° BENDS IS REQUIRED.
2. MANHOLES SHALL BE INSTALLED AT DISTANCES NO GREATER THAN 400' APART.
3. MANHOLE STEPS SHALL BE PLACED SO THAT OFFSET VERTICAL PORTION OF CONE IS FACING DOWNSTREAM.
4. GROUT ALL DOGHOUSES AND LIFT HOLES.
5. MARKING POSTS SHALL BE INSTALLED AT ALL MANHOLES LOCATED OUTSIDE OF STREET SECTION. SEE PLATE NO. MISC-01.
6. SERVICES SHALL NOT ENTER MANHOLES.
7. OUTSIDE DROPS ARE REQUIRED WHEN THE LOWEST AND HIGHEST INVERT ELEVATION DIFFERENCES EXCEED 2'. FOR ALL DROPS LESS THAN 2', SLOPED BENCHES ARE REQUIRED.
8. AN EXTERNAL MANHOLE CHIMNEY SEAL SHALL BE INSTALLED AROUND THE RINGS AND CASTING.

SANITARY STANDARD MANHOLE
CITY OF INVER GROVE HEIGHTS ENGINEERING DEPARTMENT | 8/13 | PLATE NO. SAN-01

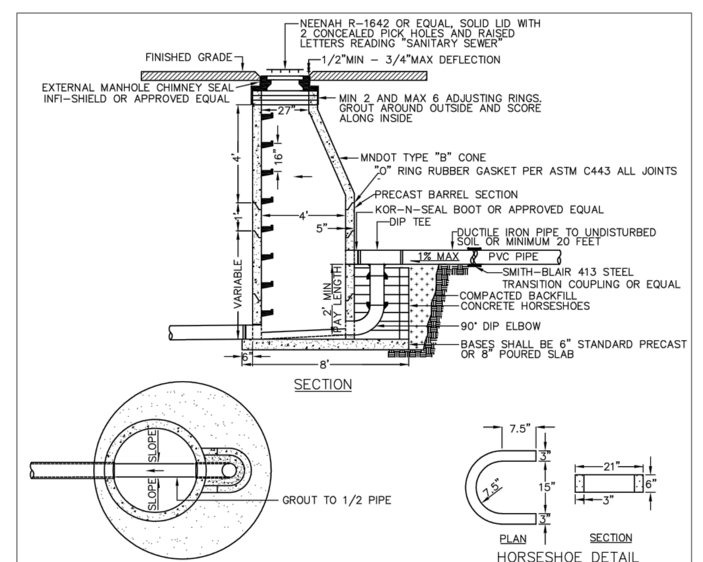

NOTES:
1. A MINIMUM FALL OF .10' ON MANHOLES THROUGH STRUCTURES AND A MINIMUM FALL OF .20' ON MANHOLES WITH 90° BENDS IS REQUIRED.
2. MANHOLES SHALL BE INSTALLED AT DISTANCES NO GREATER THAN 400' APART.
3. MANHOLE STEPS SHALL BE PLACED SO THAT OFFSET VERTICAL PORTION OF CONE IS FACING DOWNSTREAM.
4. GROUT ALL DOGHOUSES AND LIFT HOLES.
5. MARKING POSTS SHALL BE INSTALLED AT ALL MANHOLES LOCATED OUTSIDE OF STREET SECTION. SEE PLATE NO. MISC-01.
6. SERVICES SHALL NOT ENTER MANHOLES.
7. NO CONSTRUCTED INSIDE DROPS ALLOWED.
8. HORSESHOES FILLED WITH CONCRETE MORTAR ON ALL SIDES.
9. AN EXTERNAL MANHOLE CHIMNEY SEAL SHALL BE INSTALLED AROUND THE RINGS AND CASTING.
10. ALL CONNECTIONS BETWEEN DIP AND PVC SHALL BE MADE WITH SMITH BLAIR 413 STEEL TRANSITION COUPLING OR APPROVED EQUAL.

SANITARY SEWER PIPE	
DEPTH (FT)	TYPE
0-14	SDR 35
14-24	SDR 26
>24	CLASS 52 DIP

SANITARY DROP MANHOLE
CITY OF INVER GROVE HEIGHTS ENGINEERING DEPARTMENT | 1/15 | PLATE NO. SAN-02

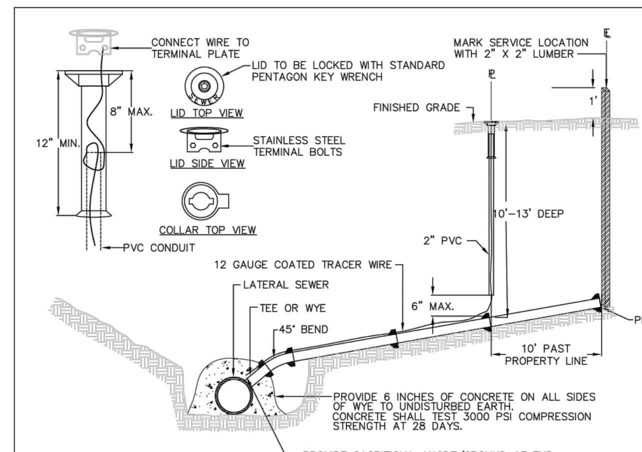

1. SERVICE SHALL BE A MINIMUM OF 10' AND A MAXIMUM OF 13' DEEP AT PROPERTY LINE AND EXTEND A MINIMUM OF 10' PAST PROPERTY LINE. SEWER SERVICE SHALL BE LOCATED 3' DOWNSTREAM FROM PROPOSED WATER SERVICE.
2. IF MAIN IS SDR 26 OR SDR 35 THEN TEE, PIPE, AND ALL BENDS SHALL BE SDR 26 TO THE PROPERTY LINE. IF MAIN IS DIP THEN TEE, PIPE, AND ALL BENDS SHALL BE DIP TO THE PROPERTY LINE.
3. SERVICE LINE SHALL BE A MINIMUM OF 4" FOR RESIDENTIAL AND 6" FOR COMMERCIAL PROPERTIES. MINIMUM SLOPE FOR 4" AND 6" SERVICE PIPE IS 2% AND 1% RESPECTIVELY.
4. CLEANOUTS ARE REQUIRED FOR EVERY 100' OF SERVICE.
5. ALL SEWER SERVICES SHALL HAVE A 2" X 2" WOOD LOCATION MARKER PLACED AT THE END OF THE SERVICE. MARKER SHALL EXTEND 1' ABOVE GRADE.
6. TRACER WIRE ACCESS BOX (VALVCO OR APPROVED EQUAL) SHALL BE PROVIDED AT PROPERTY LINE. BOXES IN PAVED DRIVEWAY AREAS REQUIRE A FORD A-1 COVER OR APPROVED EQUAL. TRACER WIRE BOX LID SHALL BE MARKED "SEWER".
7. TRACER WIRE SHALL BE DIRECT BURIAL #12 AWG, STEEL CORE SOFT DRAWN HIGH STRENGTH (380#) TRACER WIRE W/30 MIL HDPE GREEN COLOR JACKET, 30 VOLT RATING (COPPERHEAD INDUSTRIES, OR APPROVED EQUAL)
8. PLACE WIRE ALONG AXIS OF PIPE AND NOT IN DIRECT CONTACT WITH PVC PIPE. FROM END OF SANITARY SERVICE TO THE ACCESS BOX, TRACER WIRE SHALL BE PLACED IN 2" PVC CONDUIT. 2" CONDUIT SHALL EXTEND TO WITHIN 8" OF FINISHED GRADE.
9. CONNECT TRACER WIRE TO TERMINAL PLATE OF ACCESS BOX AND PROVIDE FOR 2' PIGTAIL FROM CONDUIT END.
10. TRACER WIRE SHALL BE PLACED CONTINUOUS FROM END TO END.
11. PROVIDE 5# MAGNESIUM ANODE AT TRACER WIRE END. REMOVE ANODE PROTECTIVE PLASTIC COVER AND APPLY WATER AS DIRECTED BY THE MANUFACTURER.

TYPICAL SANITARY SEWER CONNECTION
CITY OF INVER GROVE HEIGHTS ENGINEERING DEPARTMENT | 2/15 | PLATE NO. SAN-03

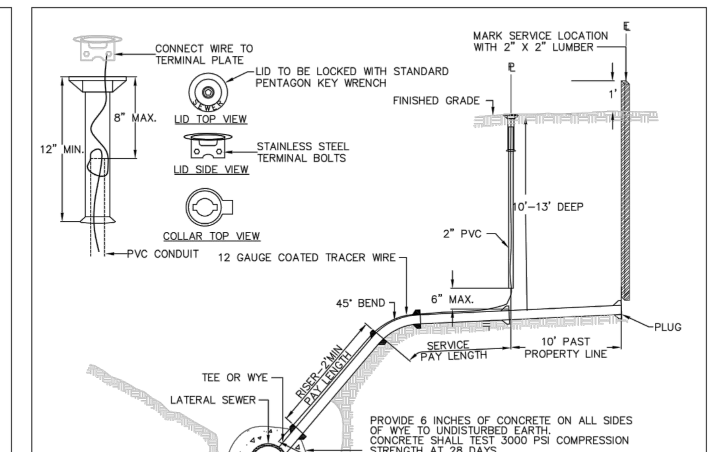

1. SERVICE SHALL BE A MINIMUM OF 10' AND A MAXIMUM OF 13' DEEP AT PROPERTY LINE AND EXTEND A MINIMUM OF 10' PAST PROPERTY LINE. SEWER SERVICE SHALL BE LOCATED 3' DOWNSTREAM FROM PROPOSED WATER SERVICE.
2. IF MAIN IS SDR 26 OR SDR 35 THEN TEE, PIPE, AND ALL BENDS SHALL BE SDR 26 TO THE PROPERTY LINE. IF MAIN IS DIP THEN TEE, PIPE, AND ALL BENDS SHALL BE DIP TO THE PROPERTY LINE.
3. SERVICE LINE SHALL BE A MINIMUM OF 4" FOR RESIDENTIAL AND 6" FOR COMMERCIAL PROPERTIES. MINIMUM SLOPE FOR 4" AND 6" SERVICE PIPE IS 2% AND 1% RESPECTIVELY.
4. CLEANOUTS ARE REQUIRED FOR EVERY 100' OF SERVICE.
5. ALL SEWER SERVICES SHALL HAVE A 2" X 2" WOOD LOCATION MARKER PLACED AT THE END OF THE SERVICE. MARKER SHALL EXTEND 1' ABOVE GRADE.
6. TRACER WIRE ACCESS BOX (VALVCO OR APPROVED EQUAL) SHALL BE PROVIDED AT PROPERTY LINE. BOXES IN PAVED DRIVEWAY AREAS REQUIRE A FORD A-1 COVER OR APPROVED EQUAL. TRACER WIRE BOX LID SHALL BE MARKED "SEWER".
7. TRACER WIRE SHALL BE DIRECT BURIAL #12 AWG, STEEL CORE SOFT DRAWN HIGH STRENGTH (380#) TRACER WIRE W/30 MIL HDPE GREEN COLOR JACKET, 30 VOLT RATING (COPPERHEAD INDUSTRIES, OR APPROVED EQUAL)
8. PLACE WIRE ALONG AXIS OF PIPE AND NOT IN DIRECT CONTACT WITH PVC PIPE. FROM END OF SANITARY SERVICE TO THE ACCESS BOX, TRACER WIRE SHALL BE PLACED IN 2" PVC CONDUIT. 2" CONDUIT SHALL EXTEND TO WITHIN 8" OF FINISHED GRADE.
9. CONNECT TRACER WIRE TO TERMINAL PLATE OF ACCESS BOX AND PROVIDE FOR 2' PIGTAIL FROM CONDUIT END.
10. TRACER WIRE SHALL BE PLACED CONTINUOUS FROM END TO END.
11. PROVIDE 5# MAGNESIUM ANODE AT TRACER WIRE END. REMOVE ANODE PROTECTIVE PLASTIC COVER AND APPLY WATER AS DIRECTED BY THE MANUFACTURER.

DEEP SANITARY SEWER CONNECTION
CITY OF INVER GROVE HEIGHTS ENGINEERING DEPARTMENT | 2/15 | PLATE NO. SAN-04

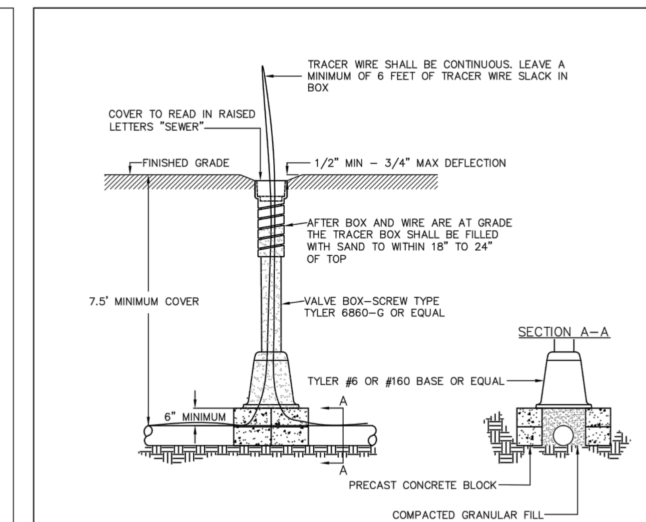

NOTES:
1. TRACER WIRE SHALL BE DIRECT BURIAL #12 AWG, STEEL CORE SOFT DRAWN HIGH STRENGTH (380#) TRACER WIRE W/30 MIL HDPE GREEN COLOR JACKET, 30 VOLT RATING (COPPERHEAD INDUSTRIES, OR ACCEPTED EQUAL)
2. EXCEPT FOR APPROVED SPLICED-IN CONNECTIONS, TRACER WIRE SHALL BE CONTINUOUS FROM END TO END.
3. SPLICED OR REPAIRED WIRE CONNECTIONS IN THE TRACER WIRE SYSTEM SHALL BE UL LISTED FOR DIRECT BURIAL, WATER AND CORROSION PROOF (DRYCONN KING, DRYCONN DIRECT BURY LUG OR ACCEPTED EQUAL). SPLIT-BOLT AND TWISTED WIRE SPLICES WILL NOT BE ACCEPTED.
4. NO INSIDE ADJUSTMENT SECTIONS ARE ALLOWED (IE. NO INSERTS)
5. MARKING POSTS SHALL BE PLACED AT ALL FORCE MAIN TRACER BOXES LOCATED OUTSIDE OF STREET SECTIONS.

FORCE MAIN TRACER WIRE BOX
CITY OF INVER GROVE HEIGHTS ENGINEERING DEPARTMENT | 2/15 | PLATE NO. SAN-05

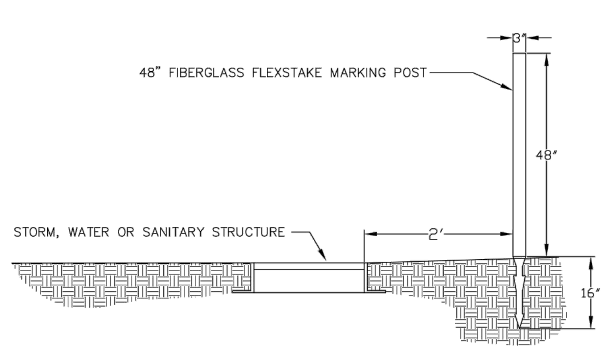

NOTES:
1. MARKING POSTS SHALL BE INSTALLED AT ALL GATE VALVES, MANHOLES OR CATCH BASINS LOCATED OUTSIDE OF STREET SURFACES.
2. MARKER POSTS SHALL BE BLUE IN COLOR FOR WATER STRUCTURES AND GREEN IN COLOR FOR STORM AND SANITARY SEWER STRUCTURES.

MARKING POST
CITY OF INVER GROVE HEIGHTS ENGINEERING DEPARTMENT | 4/11 | PLATE NO. MISC-01

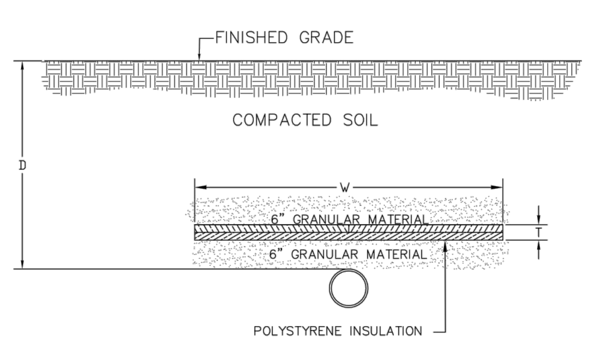

DEPTH TO TOP OF PIPE D	WIDTH OF INSULATION W	THICKNESS OF INSULATION T
2'-3'	12'	4"
3'-4'	10'	4"
4'-5'	8'	4"
5'-6'	6'	2"
6'-7'	4'	2"
7'+	NONE	NONE

NOTE:
1. INSULATION SHALL BE EXTRUDED RIGID BOARD MATERIAL HAVING A THERMAL CONDUCTIVITY OF 0.23 BTU/HR/SQUARE FOOT/DEGREE FAHRENHEIT/PER INCH OF THICKNESS MAXIMUM AT 40° F MEAN, A COMPREHENSIVE STRENGTH OF 35 PSI MINIMUM AND WATER ABSORPTION OF .25 PERCENT BY VOLUME MAXIMUM.
2. UTILITIES WITH SEPERATION UNDER 30" REQUIRE 4" INSULATION, 8' WIDE

INSULATION DETAIL
CITY OF INVER GROVE HEIGHTS ENGINEERING DEPARTMENT | 4/11 | PLATE NO. MISC-02

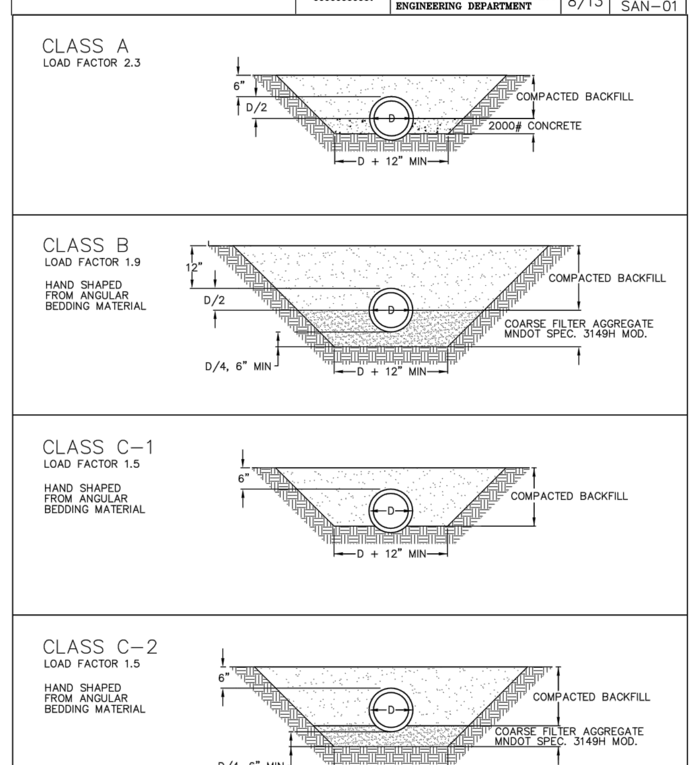

BEDDING METHODS RCP AND DIP
CITY OF INVER GROVE HEIGHTS ENGINEERING DEPARTMENT | 4/11 | PLATE NO. MISC-03

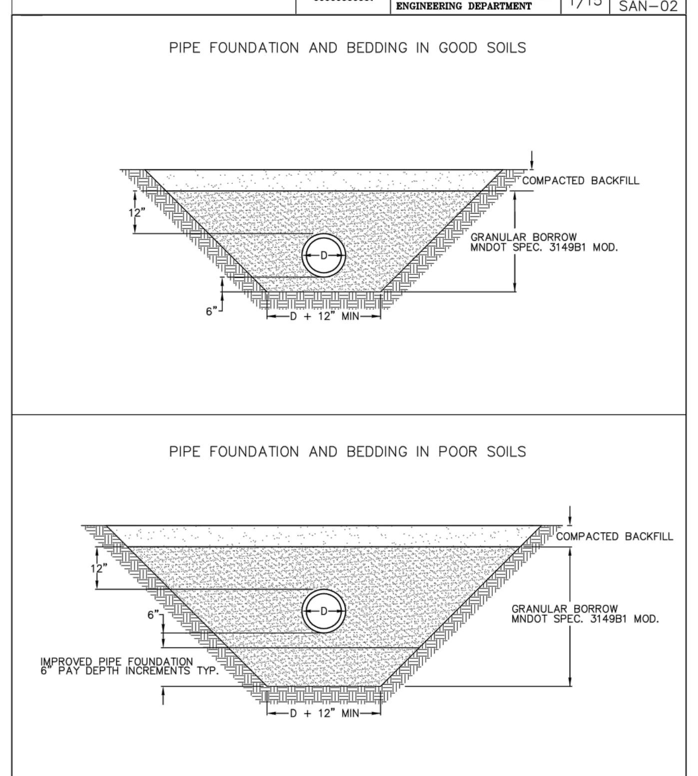

BEDDING METHODS PVC
CITY OF INVER GROVE HEIGHTS ENGINEERING DEPARTMENT | 4/11 | PLATE NO. MISC-04

Drawing name: C:\pw_working\projectwise\mwregionld\dms24793\200092detail.dwg Nov 16, 2020 – 3:57pm

ALLIANT ENGINEERING
733 Marquette Avenue
Suite 700
Minneapolis, MN 55402
612.758.3080
www.alliant-inc.com

CANVAS AT INVER GROVE HEIGHTS

PROJECT ADDRESS 2

FINAL PLAT - PHASE 1

DETAILS

I hereby certify that this plan, specification, or report was prepared by me or under my direct supervision and that I am a duly Licensed PROFESSIONAL ENGINEER under the laws of the State of MINNESOTA

MARK RAUSCH, PE

Date | License No.

QUALITY ASSURANCE/CONTROL

BY | DATE

DATE	ISSUE

PROJECT TEAM DATA
DESIGNED: MPR
DRAWN: SIL, TAS
PROJECT NO: 220-0092

4

SHEET 4 of 39

SITE PLAN DATA:

AREA AND DENSITY	
CURRENT ZONING	PUD
PROPOSED ZONING	PUD
GROSS SITE AREA	39.54 AC
ARTERIAL ROW AREA (ROBERT TRAIL S, & EAST 70TH ST)	4.91 AC
COLLECTOR ROW AREA	2.74 AC
PIPELINE EASEMENT AREA *	3.12 AC
EX. 100 YEAR FLOOD AREA *	6.23 AC
* EXCLUDES R/W AND EASEMENT OVERLAPS	
LOT TYPE	
30' WIDE	69 LOTS
50' WIDE	33 LOTS
SETBACKS	
FRONT	34 FT
REAR	20 FT
SIDE (30' WIDE)	4 FT
SIDE (50' WIDE)	5 FT
SIDE TO PUBLIC ROW (TYPICAL)	20 FT

PARKING SUMMARY
2 GARAGE STALLS PER UNIT
2 DRIVEWAY STALLS PER UNIT
52 ADDITIONAL GUEST STALLS
=4*69+4*51+52 = 532 TOTAL PARKING STALLS

OUTLOTS TO BE CITY OWNED AND MAINTAINED: A, B, F

OUTLOTS TO BE PRIVATELY OWNED AND MAINTAINED: C, D, E, G

NO PARKING SIGN

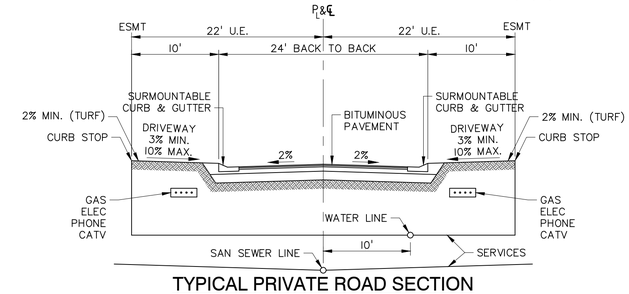

TYPICAL PRIVATE ROAD SECTION
NOT TO SCALE

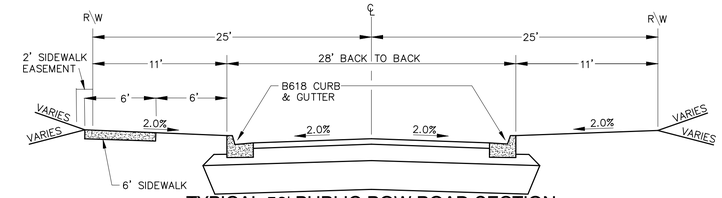

TYPICAL 50' PUBLIC ROW ROAD SECTION
NOT TO SCALE

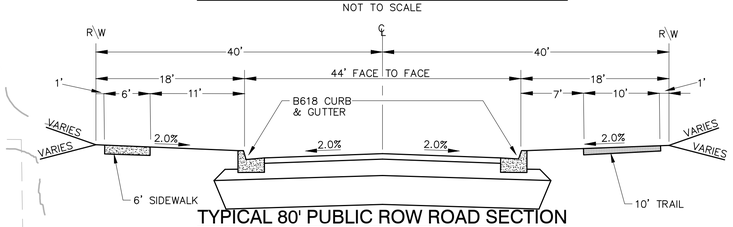

TYPICAL 80' PUBLIC ROW ROAD SECTION
NOT TO SCALE

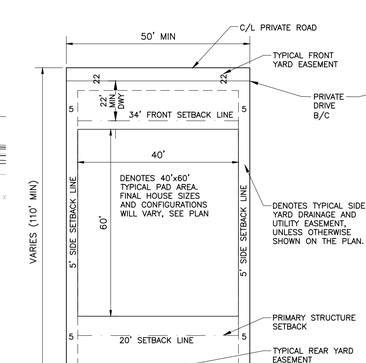

TYPICAL 50' LOT DETAIL
NOT TO SCALE

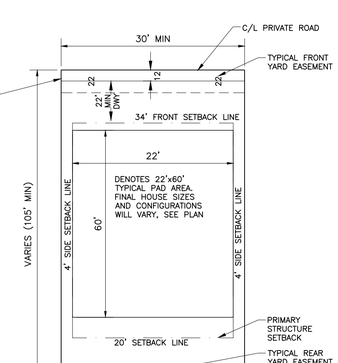

TYPICAL 30' LOT DETAIL
NOT TO SCALE

SITE LEGEND:

- PROPERTY LINE
- RIGHT-OF-WAY LINE
- LOT LINE
- EASEMENT LINE
- SETBACK LINE
- EXISTING WETLAND
- WETLAND BUFFER
- WETLAND BUFFER AREA (SEE WETLAND MANAGEMENT PLAN)
- WETLAND IMPACT AREA (SEE WETLAND MANAGEMENT PLAN)
- PROPOSED CURB AND GUTTER
- PROPOSED RETAINING WALL

N

0 40 80 100
SCALE IN FEET

FOR REVIEW ONLY
PRELIMINARY
NOT FOR CONSTRUCTION

ALLIANT
733 Marquette Avenue
Suite 700
Minneapolis, MN 55402
612.758.3080
www.alliant-inc.com

CANVAS AT INVER GROVE HEIGHTS

INVER GROVE HEIGHTS, MINNESOTA

FINAL PLAT - PHASE 1

SITE, LIGHTING, AND SIGNAGE PLAN

I hereby certify that this plan, specification, or report was prepared by me or under my direct supervision and that I am a duly Licensed PROFESSIONAL ENGINEER under the laws of the State of MINNESOTA

MARK RAUSCH, PE

Date License No.

QUALITY ASSURANCE/CONTROL

BY	DATE

DATE	ISSUE
11-16-2020	FINAL PLAT-PH1 SUBMITTAL

PROJECT TEAM DATA

DESIGNED:	MPR
DRAWN:	SIL, TAS
PROJECT NO:	220-0092

5

SHEET 5 OF 39

Drawing name: C:\pw_working\projectwise\mwresjon1\dms24793\200092site.dwg Nov 16, 2020 - 3:27pm

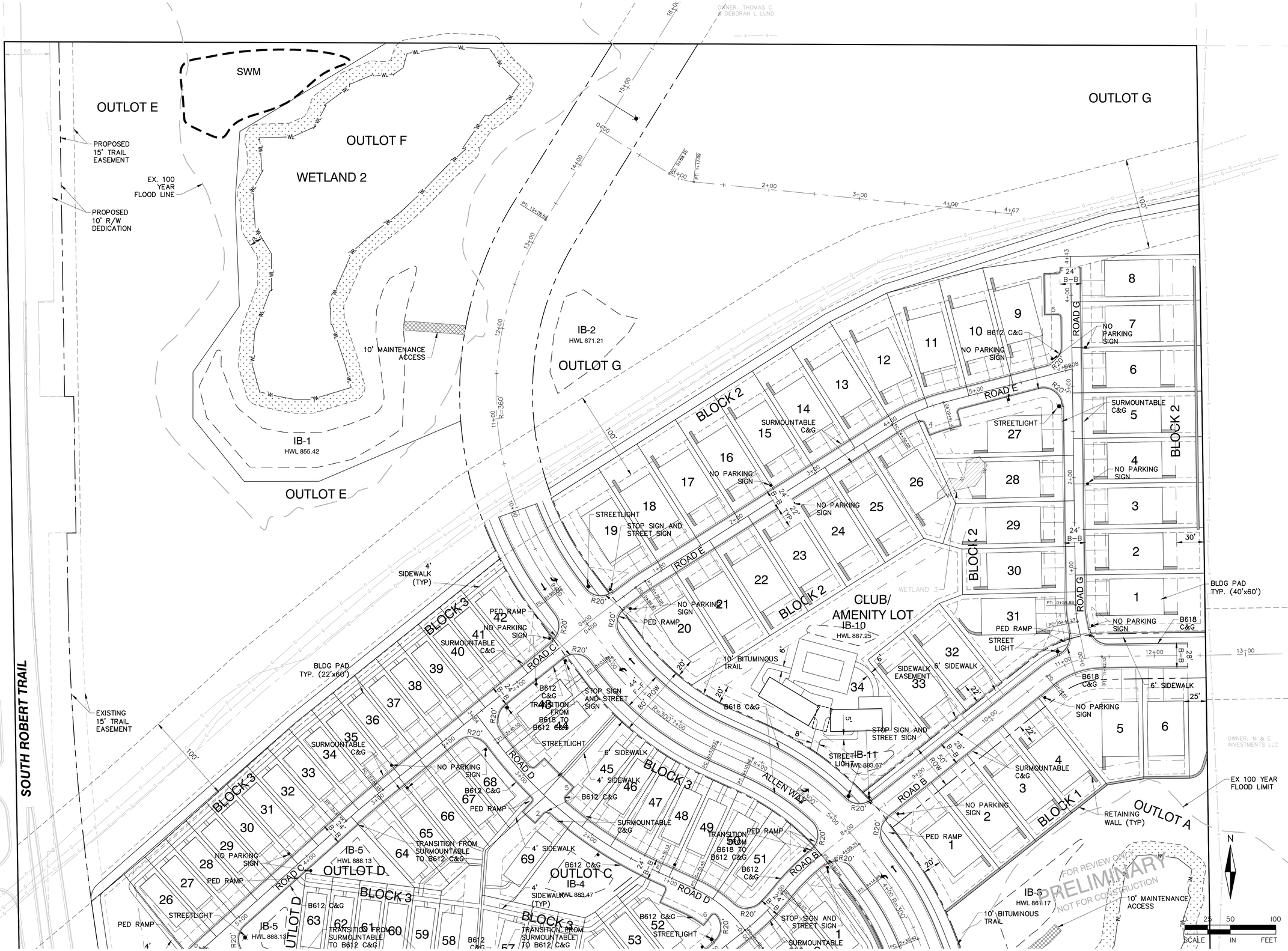

ALLIANT
733 Marquette Avenue
Suite 700
Minneapolis, MN 55402
612.758.3080
www.alliant-inc.com

CANVAS AT INVER GROVE HEIGHTS

INVER GROVE HEIGHTS, MINNESOTA

FINAL PLAT - PHASE 1

SITE, LIGHTING, AND SIGNAGE PLAN

I hereby certify that this plan, specification, or report was prepared by me or under my direct supervision and that I am a duly Licensed PROFESSIONAL ENGINEER under the laws of the State of MINNESOTA

MARK RAUSCH, PE

Date License No.

QUALITY ASSURANCE/CONTROL

BY	DATE

DATE	ISSUE
11-16-2020	FINAL PLAT-PH1 SUBMITTAL

PROJECT TEAM DATA

DESIGNED:	MPR
DRAWN:	SIL, TAS
PROJECT NO:	220-0092

Drawing name: G:\ow_working\projectwise\mwrecion\dms24793\200092site.dwg Nov 16, 2020 - 3:27pm

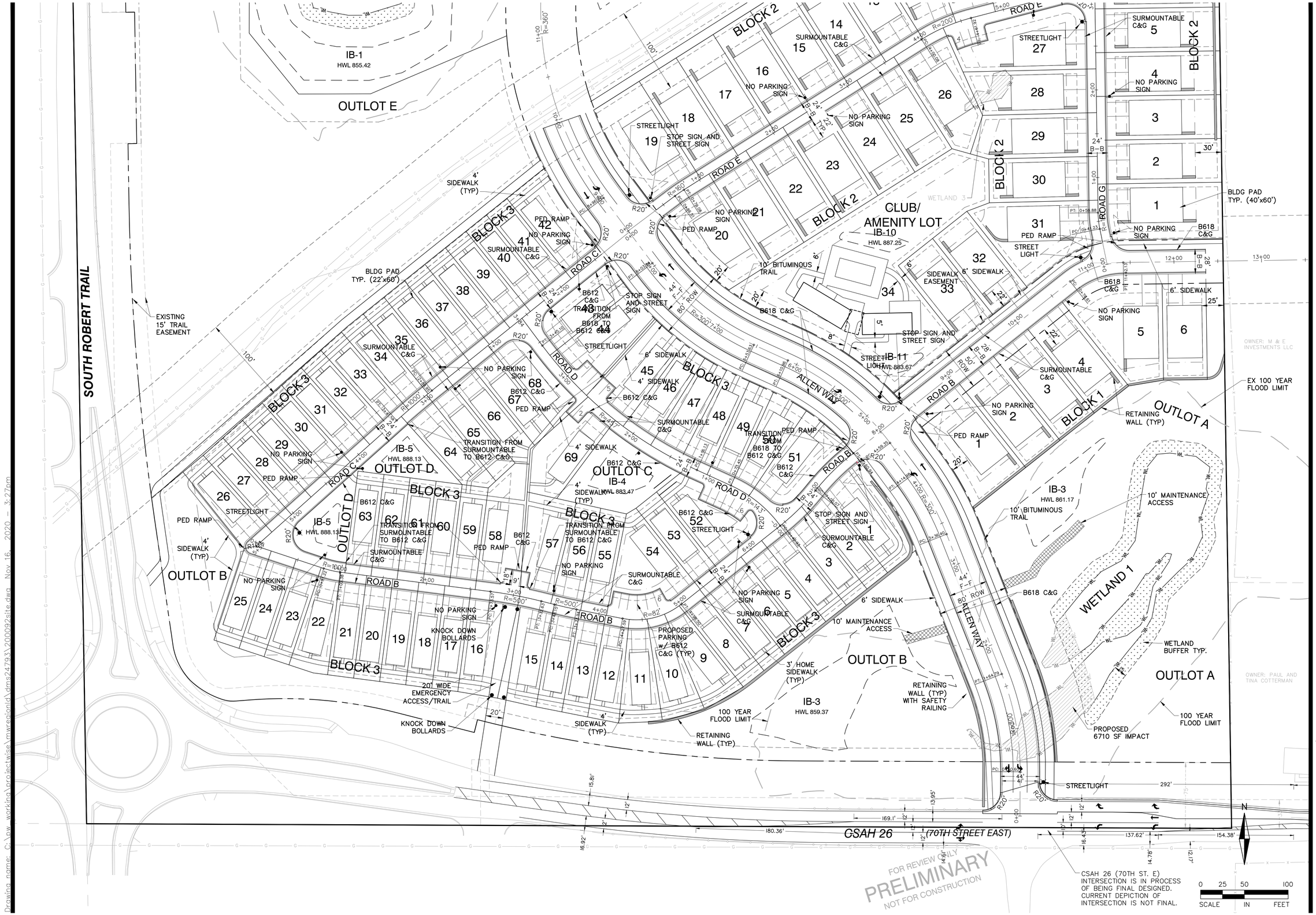

ALLIANT
733 Marquette Avenue
Suite 700
Minneapolis, MN 55402
612.758.3080
www.alliant-inc.com

CANVAS AT INVER GROVE HEIGHTS

INVER GROVE HEIGHTS, MINNESOTA

FINAL PLAT - PHASE 1

SITE, LIGHTING, AND SIGNAGE PLAN

I hereby certify that this plan, specification, or report was prepared by me or under my direct supervision and that I am a duly Licensed PROFESSIONAL ENGINEER under the laws of the State of MINNESOTA

MARK RAUSCH, PE

Date License No.

QUALITY ASSURANCE/CONTROL

BY	DATE

DATE	ISSUE
11-16-2020	FINAL PLAT-PH1 SUBMITTAL

PROJECT TEAM DATA

DESIGNED:	MPR
DRAWN:	SIL, TAS
PROJECT NO:	220-0092

7

SHEET 7 OF 39

Drawing name: C:\pw_working\projectwise\mwrecion1\dms24793\200092site.dwg Nov 16, 2020 - 3:27pm

LANE STRIPING DESIGN SHOWN IS PRELIMINARY. FINAL LANE STRIPING TO BE COORDINATED WITH THE CITY OF INVER GROVE HEIGHTS.

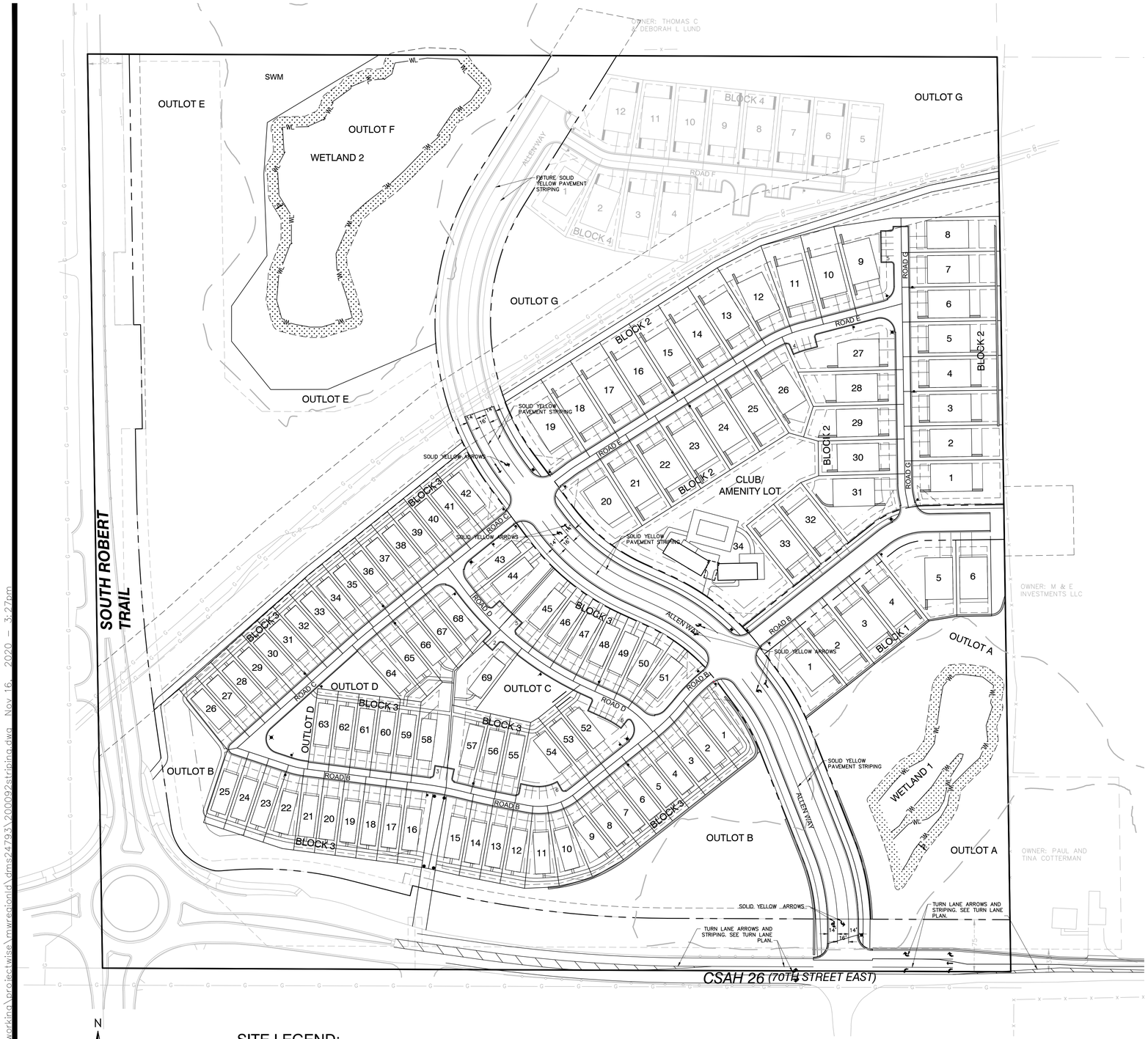

N

0 40 80 160
SCALE IN FEET

SITE LEGEND:

- PROPERTY LINE
- RIGHT-OF-WAY LINE
- LOT LINE
- EASEMENT LINE
- SETBACK LINE
- WL — EXISTING WETLAND
- WETLAND BUFFER
- WETLAND BUFFER AREA (SEE WETLAND MANAGEMENT PLAN)
- PROPOSED CURB AND GUTTER
- PROPOSED RETAINING WALL

FOR REVIEW ONLY
PRELIMINARY
NOT FOR CONSTRUCTION

ALLIANT
733 Marquette Avenue
Suite 700
Minneapolis, MN 55402
612.758.3080
www.alliant-inc.com

CANVAS AT INVER GROVE HEIGHTS

INVER GROVE HEIGHTS, MINNESOTA

FINAL PLAT - PHASE 1

LANE STRIPING PLAN

I hereby certify that this plan, specification, or report was prepared by me or under my direct supervision and that I am a duly Licensed PROFESSIONAL ENGINEER under the laws of the State of MINNESOTA

MARK RAUSCH, PE

Date License No.

QUALITY ASSURANCE/CONTROL

BY DATE

DATE	ISSUE
11-16-2020	FINAL PLAT-PH1 SUBMITTAL

PROJECT TEAM DATA

DESIGNED: MPR
DRAWN: SIL, TAS
PROJECT NO: 220-0092

Drawing name: C:\cw_working\projectwise\powregionld\dms24793\200092striping.dwg Nov 16, 2020 - 3:27pm

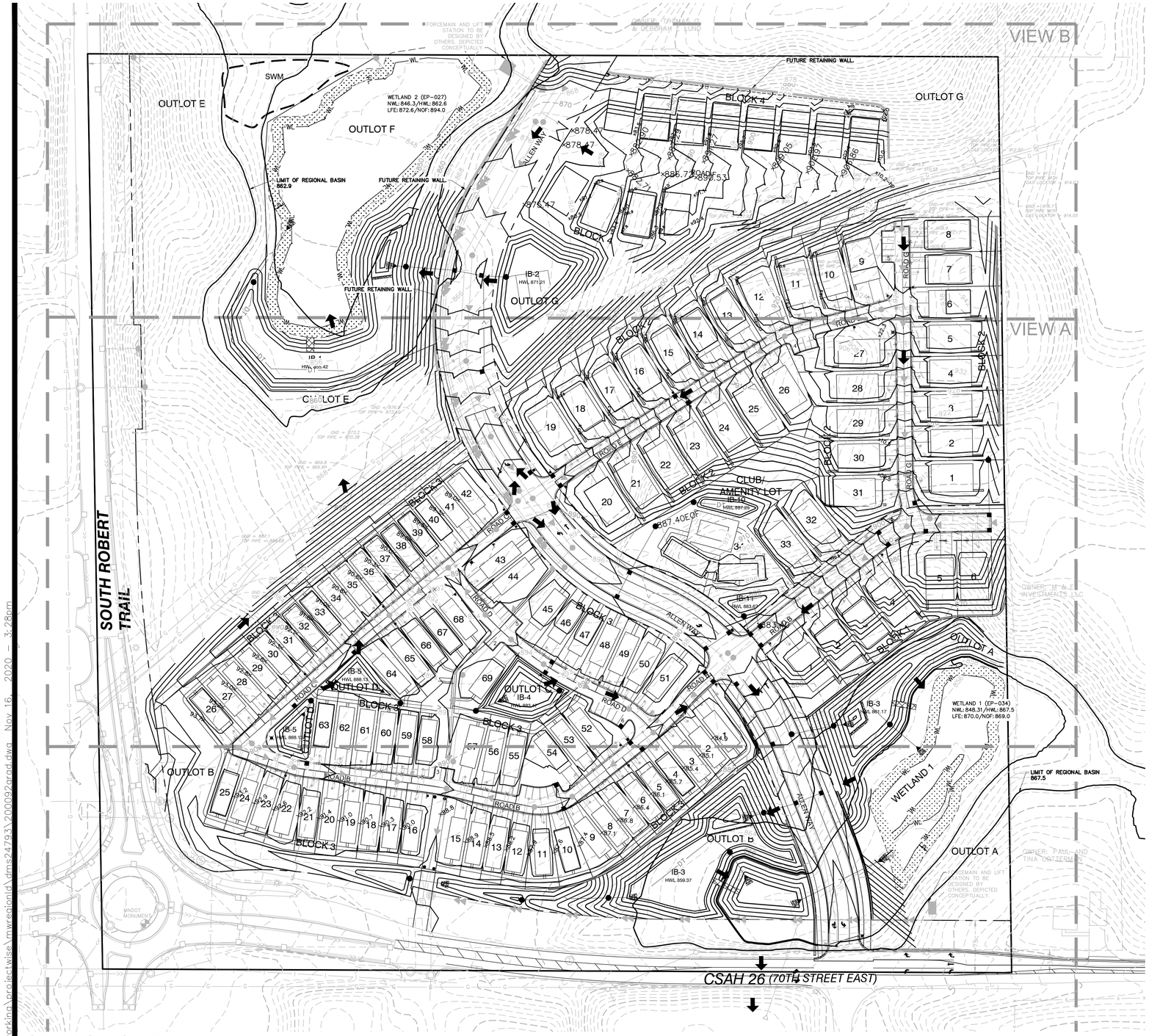

GRADING LEGEND:

789	EXISTING CONTOUR
789	PROPOSED CONTOUR
	PROPOSED RETAINING WALL
×62.44 ×962.44	PROPOSED TC, CL ELEVATION
×62.4 ×962.4	PROPOSED SPOT ELEVATION
1.0%	DIRECTION OF DRAINAGE
	EMERGENCY OVERFLOW ROUTING
	PROPOSED CATCH BASINS
	PROPOSED STORM SEWER
TW 70.0 BW 66.0	TOP OF WALL ELEVATION BOTTOM OF WALL ELEVATION
	PROPERTY LINE
	LOT LINE
	EASEMENT LINE
	EOF ROUTING

GRADING NOTES:

1. ALL FINISHED GRADES SHALL SLOPE AWAY FROM PROPOSED BUILDINGS AT MINIMUM GRADE OF 2.0%. ALL SWALES SHALL HAVE A MINIMUM SLOPE OF 2.0%.
2. THE CONTRACTOR SHALL KEEP THE ADJACENT ROADWAYS FREE OF DEBRIS AND PREVENT THE OFF-SITE TRACKING OF SOIL IN ACCORDANCE WITH THE REQUIREMENTS OF THE CITY AND WATERSHED.
3. NOTIFY GOPHER STATE ONE CALL, AT (800)252-1166, 48 HOURS PRIOR TO START OF CONSTRUCTION.
4. ALL IMPROVEMENTS TO CONFORM WITH CITY OF INVER GROVE HEIGHTS CONSTRUCTION STANDARDS SPECIFICATION, LATEST EDITION.
5. ROCK CONSTRUCTION ENTRANCES SHALL BE PROVIDED AT ALL CONSTRUCTION ACCESS POINTS.
6. REFER TO GEOTECHNICAL REPORT AND PROJECT MANUAL, FOR SOIL CORRECTION REQUIREMENTS AND TESTING REQUIREMENTS.
7. STRIP TOPSOIL PRIOR TO ANY CONSTRUCTION. REUSE STOCKPILE ON SITE. STOCKPILE PERIMETERS MUST BE PROTECTED WITH SILT FENCE.
8. PRIOR TO STARTING CONSTRUCTION, THE CONTRACTOR SHALL BE RESPONSIBLE TO MAKE SURE THAT ALL REQUIRED PERMITS AND APPROVALS HAVE BEEN OBTAINED. NO CONSTRUCTION OR FABRICATION SHALL BEGIN UNTIL THE CONTRACTOR HAS RECEIVED AND THOROUGHLY REVIEWED ALL PLANS AND OTHER DOCUMENTS APPROVED BY ALL OF THE PERMITTING AUTHORITIES.
9. IMMEDIATELY FOLLOWING GRADING OF (3:1 OR GREATER) SIDE SLOPES AND DRAINAGE SWALES, WOOD FIBER BLANKET OR OTHER APPROVED SOIL STABILIZING METHOD (APPROVED BY ENGINEER) SHALL BE APPLIED OVER APPROVED SEED MIXTURE AND A MINIMUM OF 4" TOPSOIL.
10. THE GENERAL CONTRACTOR MUST DISCUSS DEWATERING PLANS WITH ALL SUBCONTRACTORS TO VERIFY NPDES REQUIREMENTS. IF DEWATERING IS REQUIRED DURING CONSTRUCTION, CONTRACTOR SHOULD CONSULT WITH EROSION CONTROL INSPECTOR AND ENGINEER TO DETERMINE APPROPRIATE METHOD.
11. REFER TO EROSION CONTROL PLAN FOR ALL EROSION AND SEDIMENT CONTROL DEVICE LOCATIONS.
12. ALL 3:1 SLOPES SHALL BE AMENDED WITH A MINIMUM OF 2.5 INCHES OF COMPOST ROTOTILLED TO A DEPTH OF 8 INCHES AND REINFORCED WITH EROSION CONTROL BLANKET WITH NATURAL NETTING AND STITCHING.
13. INFILTRATION BASINS SHALL NOT BE CONSTRUCTED UNTIL THE CONTRIBUTORY DRAINAGE AREAS ARE ESTABLISHED.
14. INFILTRATION BASINS SHALL NOT BE EXCAVATED UNTIL THEY ARE READY FOR CONSTRUCTION.
15. INFILTRATION BASIN LOCATIONS SHALL BE PROTECTED FROM COMPACTION AND SILTATION DURING SITE GRADING AND HOME CONSTRUCTION ACTIVITIES.

RETAINING WALL NOTES:

RETAINING WALL MASS GRADING PREPARATION

1. ALL RETAINING WALLS SHALL BE ROUGH GRADED AT A 2:1 SLOPE WITH BASE OF SLOPE AT PROPOSED WALL FACE.
2. THE RETAINING WALL SLOPE AREAS ARE TO BE MAINTAINED UNTIL RETAINING WALL CONSTRUCTION OCCURS. ANY EROSION SHALL BE REMEDIED AND RESTORED.
3. BUILDING PERMITS ARE REQUIRED FOR ALL RETAINING WALLS 4 FEET IN HEIGHT OR GREATER AND THE WALLS SHALL BE DESIGNED BY A STRUCTURAL ENGINEER WITH DESIGN REVIEWED AND APPROVED BY THE CITY PRIOR TO INSTALLATION. ANY QUESTIONS REGARDING THE BUILDING PERMITS SHALL BE DIRECTED TO THE CITY BUILDING INSPECTOR.
4. INSTALL SAFETY RAILING ATOP ALL WALLS WHERE REQUIRED BY CODE.
5. SAFETY RAILING TO BE 4' BLACK CHAIN LINK FENCE.
6. RETAINING WALL CONTRACTOR AND/OR RETAINING WALL STRUCTURAL ENGINEER ARE RESPONSIBLE TO REVIEW CIVIL SITE ENGINEERING DRAWINGS. ANY OBSERVED CONCERNS WITH CIVIL SITE ENGINEERING DESIGN ELEMENTS RELATED TO RETAINING WALLS THAT REQUIRE MODIFICATIONS TO THE CIVIL SITE DESIGN IS THEIR RESPONSIBILITY TO COORDINATE WITH PROJECT OWNER AND CIVIL SITE ENGINEER. IF NO COORDINATION IS REQUESTED IT SHALL BE UNDERSTOOD THAT ALL CONDITIONS WITHIN THE CIVIL SITE DESIGN AND PLANS ARE ACCEPTABLE AND ABLE TO BE PROVIDED FOR IN THE RETAINING WALL DESIGN AND CONSTRUCTION.
7. RETAINING WALLS ARE TO BE FINAL DESIGNED AND PERMITTED BY OTHERS.

COLLECTOR ROAD

(INSET B)

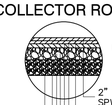

- 2" TYPE WEARING COURSE MIX SPWEA330C OR SPWEA440C
- TACK COAT
- 2" TYPE NON-WEARING COURSE MIX SPWEA330C OR SPWEA440C
- TACK COAT
- 2" TYPE NON-WEARING COURSE MIX SPWEA330C OR SPWEA440C
- 10" AGGREGATE BASE CLASS 5 (MNDOT 3138)
- 24" SELECT GRANULAR MATERIAL
- GEOTEXTILE FABRIC MNDOT TYPE V

CONCRETE SIDEWALK

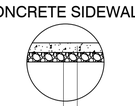

- 6" CONCRETE
- 6" AGGREGATE BASE CLASS 5

PRIVATE ROAD & 50' ROW SECTION

(INSET A)

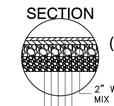

- 2" WEARING COURSE MIX SPWEA330C
- TACK COAT
- 2" NON-WEARING COURSE MIX SPWEA330C
- 6" AGGREGATE BASE CLASS 5
- 24" SELECT GRANULAR MATERIAL
- GEOTEXTILE FABRIC

BITUMINOUS TRAIL

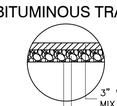

- 3" WEARING COURSE MIX (SPWEA230E)
- 6" AGGREGATE BASE CLASS 5
- COMPACTED SUBGRADE

PAVEMENT SECTIONS

NOT TO SCALE

FOR REVIEW ONLY
PRELIMINARY
NOT FOR CONSTRUCTION

N

0 40 80 160
SCALE IN FEET

ALLIANT
733 Marquette Avenue
Suite 700
Minneapolis, MN 55402
612.758.3080
www.alliant-inc.com

CANVAS AT INVER GROVE HEIGHTS

INVER GROVE HEIGHTS, MINNESOTA

FINAL PLAT - PHASE 1

GRADING AND DRAINAGE PLAN

I hereby certify that this plan, specification, or report was prepared by me or under my direct supervision and that I am a duly Licensed PROFESSIONAL ENGINEER under the laws of the State of MINNESOTA

MARK RAUSCH, PE

Date License No.

QUALITY ASSURANCE/CONTROL

BY	DATE

DATE	ISSUE
11-16-2020	FINAL PLAT-PH1 SUBMITTAL

PROJECT TEAM DATA

DESIGNED:	MPR
DRAWN:	SIL, TAS
PROJECT NO:	220-0092

Drawing name: C:\pw_working\projectwise\mwregion1\dms24793\200092grad.dwg Nov 16, 2020 - 3:28pm

ALLIANT
733 Marquette Avenue
Suite 700
Minneapolis, MN 55402
612.758.3080
www.alliant-inc.com

CANVAS AT INVER GROVE HEIGHTS

INVER GROVE HEIGHTS, MINNESOTA

FINAL PLAT - PHASE 1

GRADING AND DRAINAGE PLAN

I hereby certify that this plan, specification, or report was prepared by me or under my direct supervision and that I am a duly Licensed PROFESSIONAL ENGINEER under the laws of the State of MINNESOTA

MARK RAUSCH, PE

Date License No.

QUALITY ASSURANCE/CONTROL

BY	DATE

DATE	ISSUE
11-16-2020	FINAL PLAT-PH1 SUBMITTAL

PROJECT TEAM DATA

DESIGNED:	MPR
DRAWN:	SIL, TAS
PROJECT NO:	220-0092

10

SHEET 10 OF 39

Drawing name: G:\cw_working\projectwise\mwregional\dms24793\200092grad.dwg Nov 16, 2020 - 3:28pm

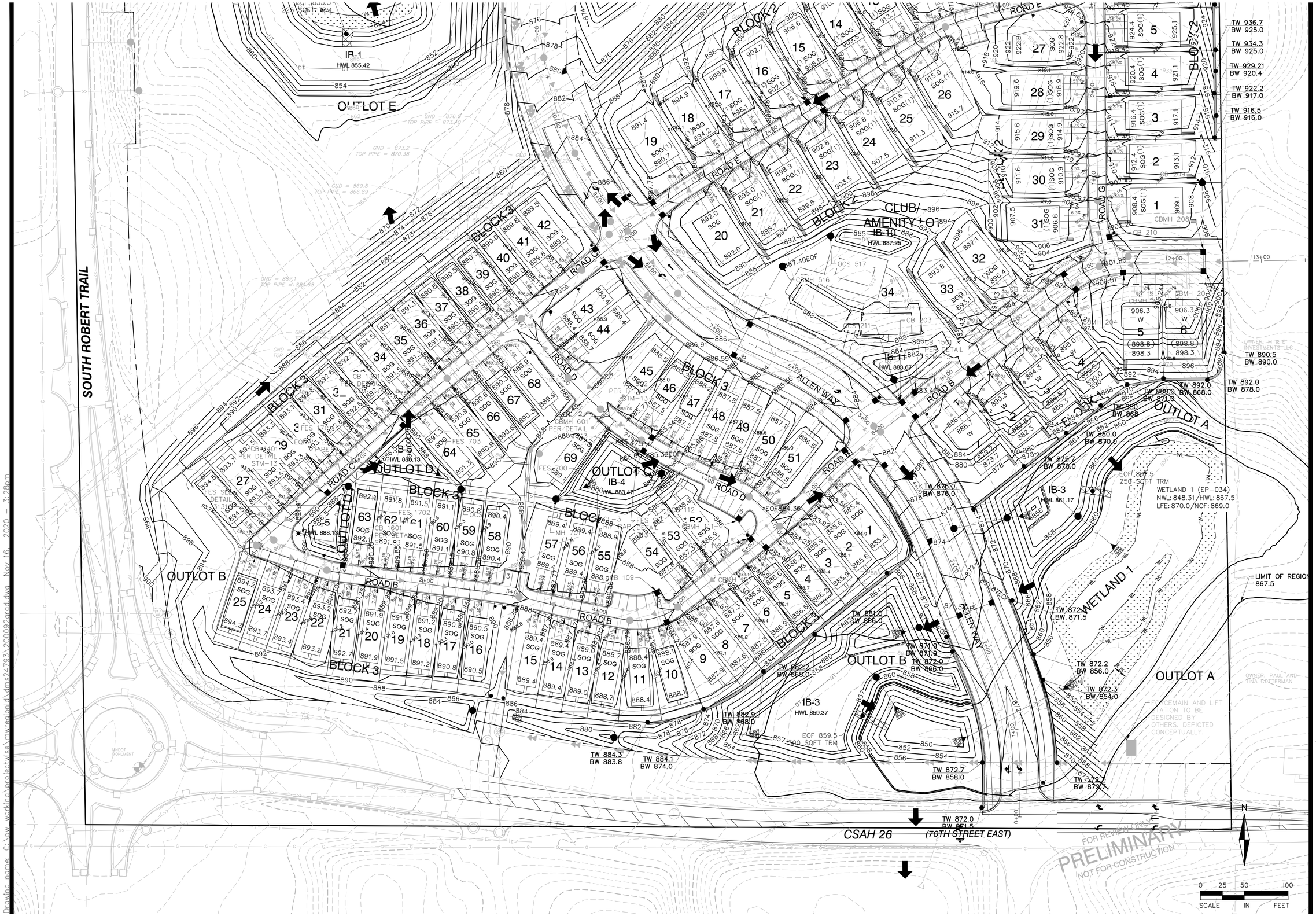

ALLIANT
733 Marquette Avenue
Suite 700
Minneapolis, MN 55402
612.758.3080
www.alliant-inc.com

CANVAS AT INVER GROVE HEIGHTS

INVER GROVE HEIGHTS, MINNESOTA

FINAL PLAT - PHASE 1

GRADING AND DRAINAGE PLAN

I hereby certify that this plan, specification, or report was prepared by me or under my direct supervision and that I am a duly Licensed PROFESSIONAL ENGINEER under the laws of the State of MINNESOTA

MARK RAUSCH, PE

Date License No.

QUALITY ASSURANCE/CONTROL

BY	DATE

DATE	ISSUE
11-16-2020	FINAL PLAT-PH1 SUBMITTAL

PROJECT TEAM DATA

DESIGNED:	MPR
DRAWN:	SIL, TAS
PROJECT NO:	220-0092

Drawing name: G:\pw_working\projectwise\mwregional\dms24793\200092prod.dwg Nov 16, 2020 - 3:28pm

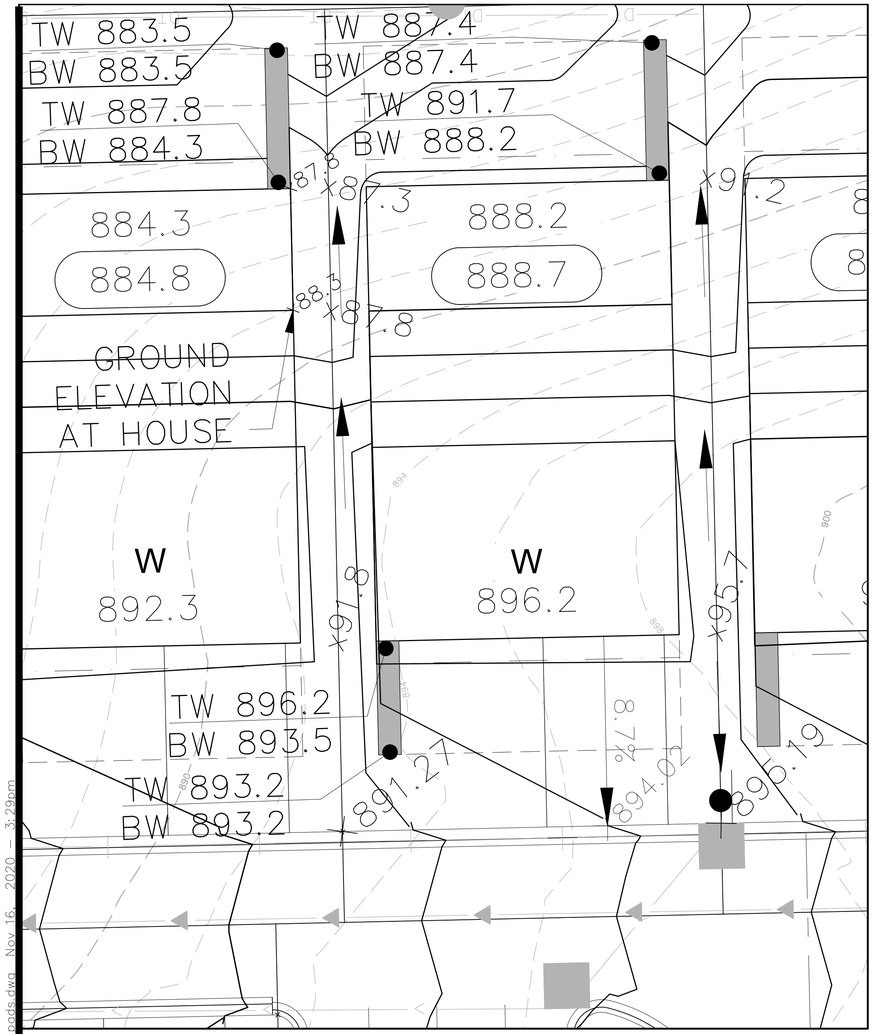

WALKOUT - TYPICAL PAD DETAIL

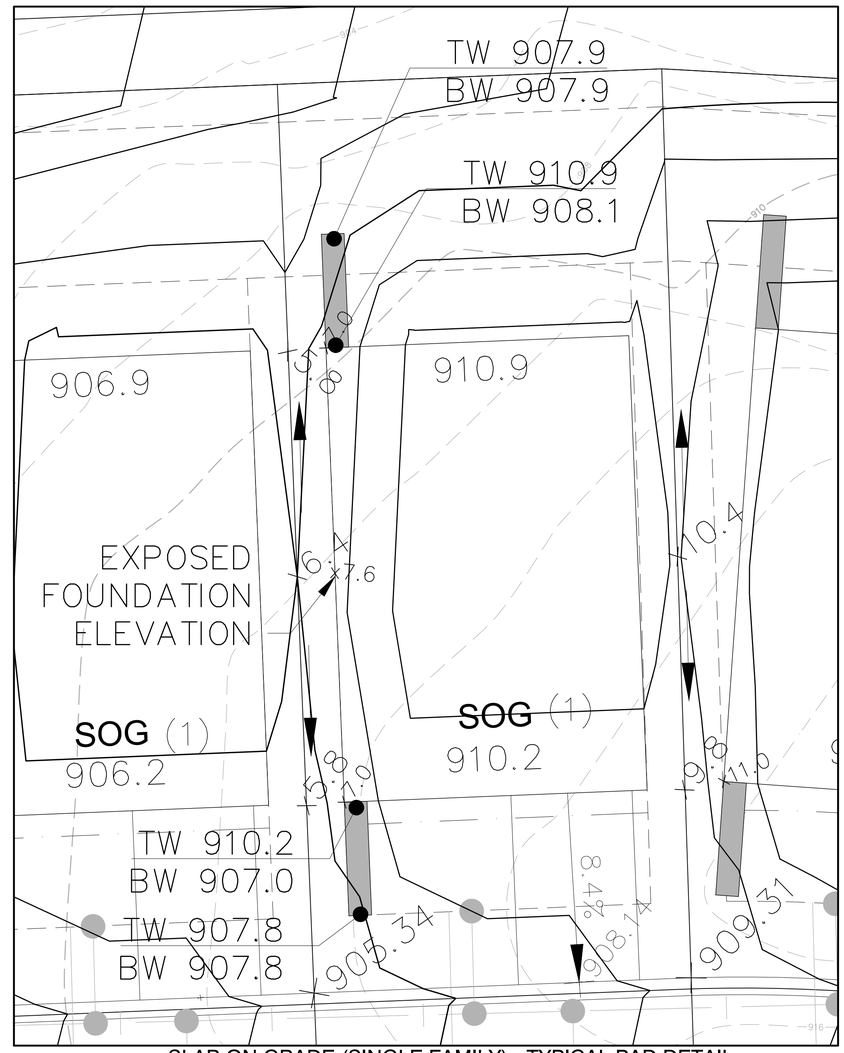

SLAB ON GRADE (SINGLE FAMILY) - TYPICAL PAD DETAIL

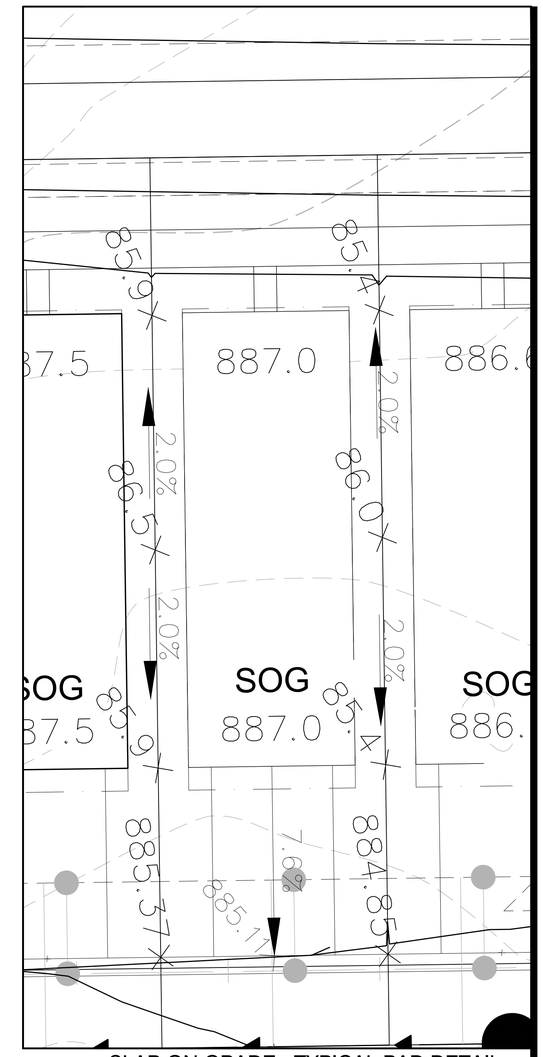

SLAB ON GRADE - TYPICAL PAD DETAIL (HIGH DENSITY)

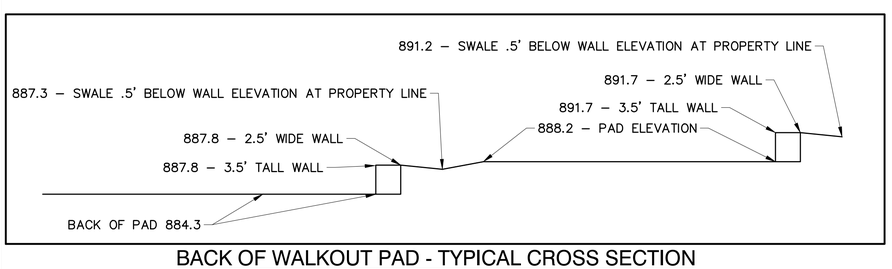

BACK OF WALKOUT PAD - TYPICAL CROSS SECTION

NOT TO SCALE

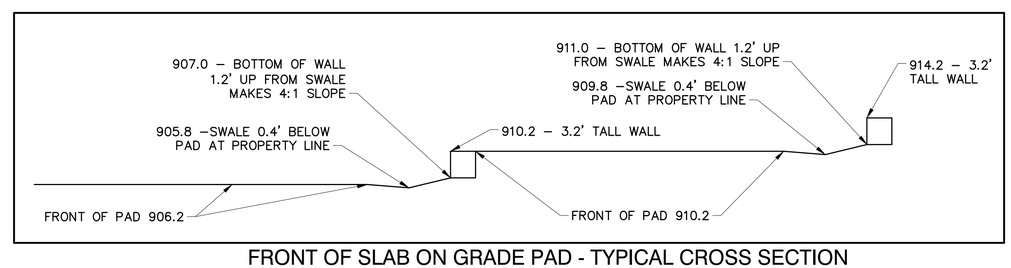

FRONT OF SLAB ON GRADE PAD - TYPICAL CROSS SECTION

NOT TO SCALE

GRADING LEGEND:

- EXISTING CONTOUR
- PROPOSED CONTOUR
- PROPOSED RETAINING WALL
- ×62.44 ×962.44 PROPOSED TC, CL ELEVATION
- ×62.4 ×962.4 PROPOSED SPOT ELEVATION
- 1.0% DIRECTION OF DRAINAGE
- FRONT OF PAD 954.3 — GARAGE FLOOR ELEVATION
- (1) — ADDITIONAL REQUIRED STEPS BEYOND TYPICAL 0.67' DIFF.
- W — HOUSE PAD TYPE
- 946.8 — LOWEST FLOOR ELEVATION
- 946.3 — REAR ELEVATION
- PROPOSED CATCH BASINS
- PROPOSED STORM SEWER
- TW 70.0 TOP OF WALL ELEVATION
- BW 66.0 BOTTOM OF WALL ELEVATION
- PROPERTY LINE
- LOT LINE
- EASEMENT LINE

FOR REVIEW ONLY
PRELIMINARY
NOT FOR CONSTRUCTION

N

0 5 10 20
SCALE IN FEET

ALLIANT
733 Marquette Avenue
Suite 700
Minneapolis, MN 55402
612.758.3080
www.alliant-inc.com

CANVAS AT INVER GROVE HEIGHTS
INVER GROVE HEIGHTS, MINNESOTA
FINAL PLAT - PHASE 1
TYPICAL PAD - GRADING DETAILS

I hereby certify that this plan, specification, or report was prepared by me or under my direct supervision and that I am a duly Licensed PROFESSIONAL ENGINEER under the laws of the State of MINNESOTA

MARK RAUSCH, PE

Date License No.

QUALITY ASSURANCE/CONTROL

BY	DATE

DATE	ISSUE
11-16-2020	FINAL PLAT-PH1 SUBMITTAL

PROJECT TEAM DATA

DESIGNED:	MPR
DRAWN:	SIL, TAS
PROJECT NO:	220-0092

12

SHEET 12 OF 39

Drawing name: G:\cw_working\projectwise\mwregional\dms24793\200092grad-pads.dwg Nov 16, 2020 - 3:29pm

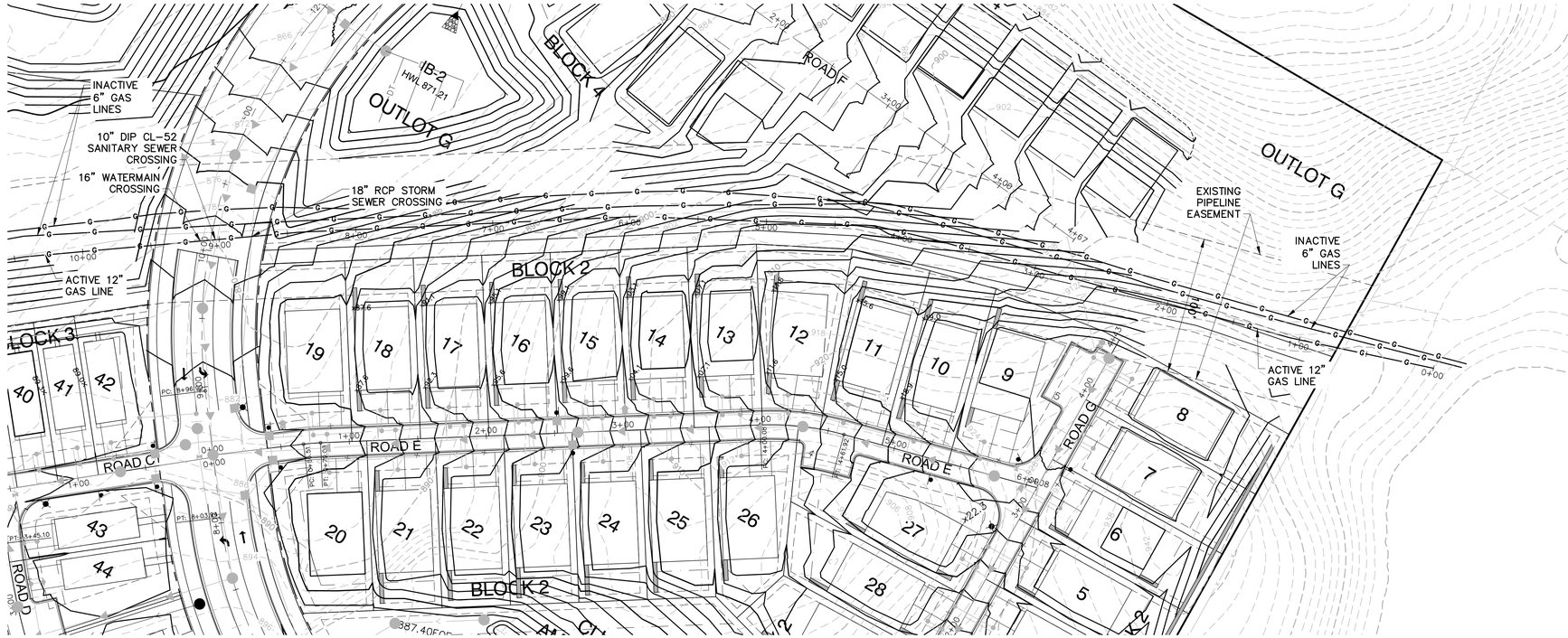

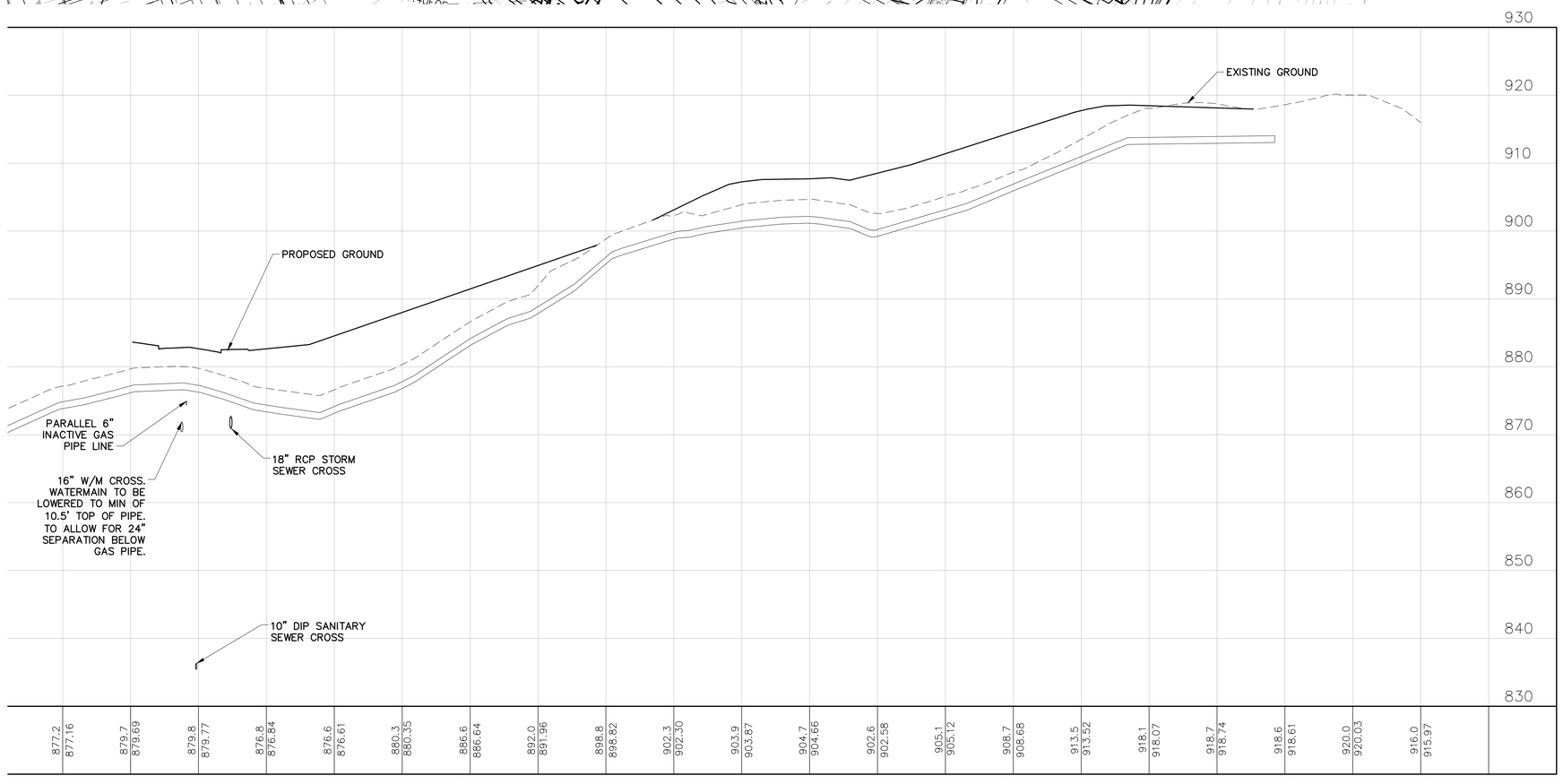

NOTES:

1. CONTRACTOR TO OBTAIN ALL NECESSARY APPROVALS FROM MAGELLAN AND CITY PRIOR TO BEGINNING CONSTRUCTION.
2. CONTRACTOR TO CONTACT MAGELLAN PRIOR TO DOING ANY WORK WITHIN HIGH PRESSURE PIPELINE RIGHT OF WAY.
3. CONTRACTOR SHALL NOT TRANSPORT CONSTRUCTION MATERIALS LONGITUDINALLY OVER THE PIPELINE. ANY NECESSARY CROSSING SHOULD OCCUR AT OR AS NEAR AS POSSIBLE TO 90°.
4. NO TRACK TYPE CONSTRUCTION EQUIPMENT SHALL BE PERMITTED TO PIVOT OR TURN DIRECTLY OVER THE TOP OF THE PIPELINE.
5. A SCRAPER OR PAN TYPE TRACTOR SHALL NOT BE USED FOR REMOVAL OF SOIL WITHIN 10' OF THE PIPELINE.
6. A SHEEPSFOOT ROLLER SHALL NOT BE USED FOR COMPACTION PURPOSES WITHIN 5' OF OR DIRECTLY ABOVE, THE CENTERLINE OF THE PIPELINE.
7. NO VIBRATORY ROLLERS SHALL BE USED WITHIN 3' OF THE CENTERLINE OF THE PIPELINE UNTIL COMPACTED COVER OVER THE PIPELINE HAS REACHED A DEPTH OF 3.5'.
8. ANY EXCAVATION WITHIN 2' OF THE PIPELINE SHALL BE DONE BY HAND.
9. 4.0' MINIMUM COVER MUST BE MAINTAINED AT ALL ROAD CROSSINGS.
10. FOREIGN LINES SHALL CROSS UNDER THE PIPELINE WITH AT LEAST 2' OF VERTICAL SEPARATION.
11. BELOW GROUND PRECAUTIONARY FLAGGING SHALL BE PLACED IN THE DITCH LINE ABOVE THE FOREIGN LINE. WARNING TAPE SHALL BE PLACED AT MINIMUM 15" ABOVE MAGELLAN PIPE. WARNING TAPE SHOULD EXTEND FOR 20' ON EITHER SIDE OF THE CENTERLINE OF THE PIPELINE OR ACROSS THE WIDTH OF THE EASEMENT TRACT.

LEGEND:

- EASEMENT LINE
- BUILDING SETBACK
- PROPERTY LINE
- LOT LINE
- ROW
- 789 EXISTING CONTOUR
- 789 PROPOSED CONTOUR
- PROPOSED STORM SEWER
- PROPOSED SANITARY SEWER
- PROPOSED WATERMAIN
- PROPOSED CATCH BASIN
- PROPOSED SANITARY MANHOLE
- PROPOSED GATE VALVE
- PROPOSED HYDRANT

N

0 25 50 100
SCALE IN FEET

FOR REVIEW ONLY
PRELIMINARY
NOT FOR CONSTRUCTION

Drawing name: G:\eng working\projectwise\mwregion1\dms24793\200092gas.dwg Nov 16, 2020 - 3:30pm

ALLIANT
733 Marquette Avenue
Suite 700
Minneapolis, MN 55402
612.758.3080
www.alliant-inc.com

CANVAS AT INVER GROVE HEIGHTS
INVER GROVE HEIGHTS, MINNESOTA
FINAL PLAT - PHASE 1
GAS PIPELINE PLAN AND PROFILE

I hereby certify that this plan, specification, or report was prepared by me or under my direct supervision and that I am a duly Licensed PROFESSIONAL ENGINEER under the laws of the State of MINNESOTA

MARK RAUSCH, PE

Date License No.

QUALITY ASSURANCE/CONTROL

BY DATE

DATE	ISSUE
11-16-2020	FINAL PLAT-PH1 SUBMITTAL

PROJECT TEAM DATA

DESIGNED: MPR
DRAWN: SIL, TAS
PROJECT NO: 220-0092

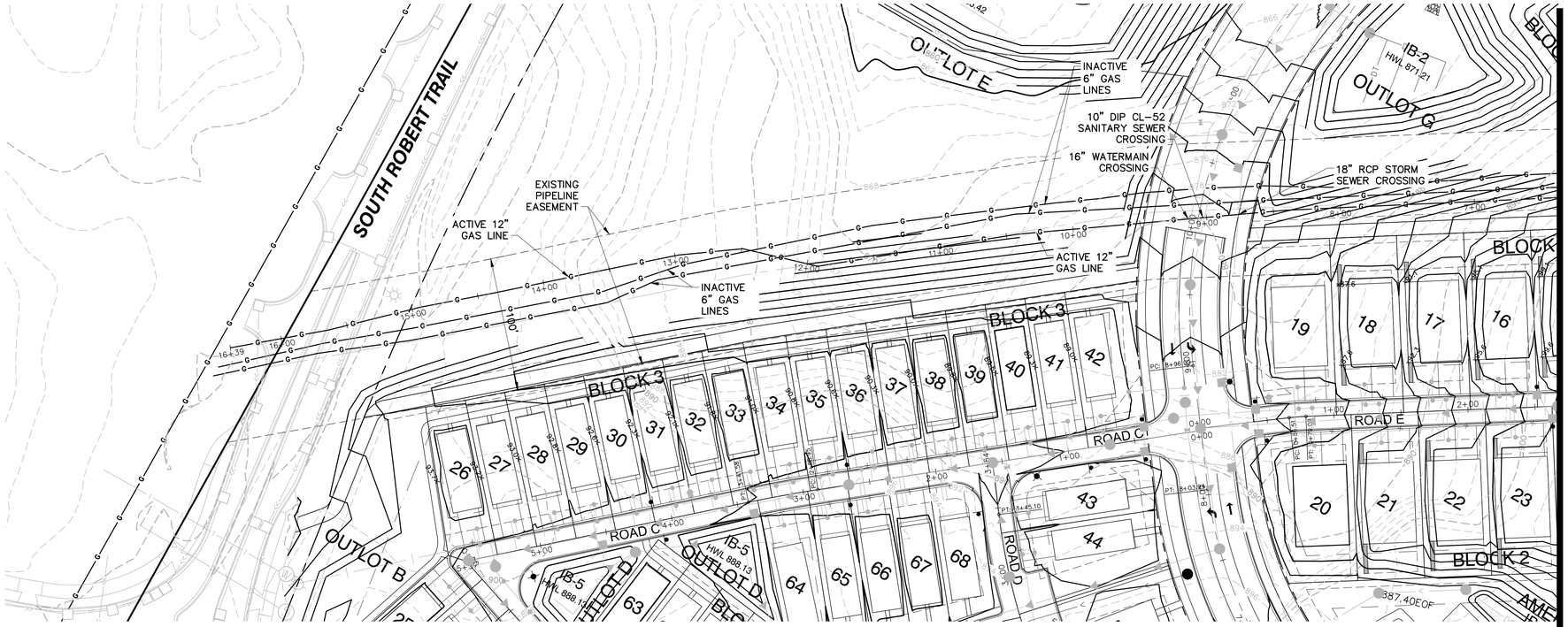

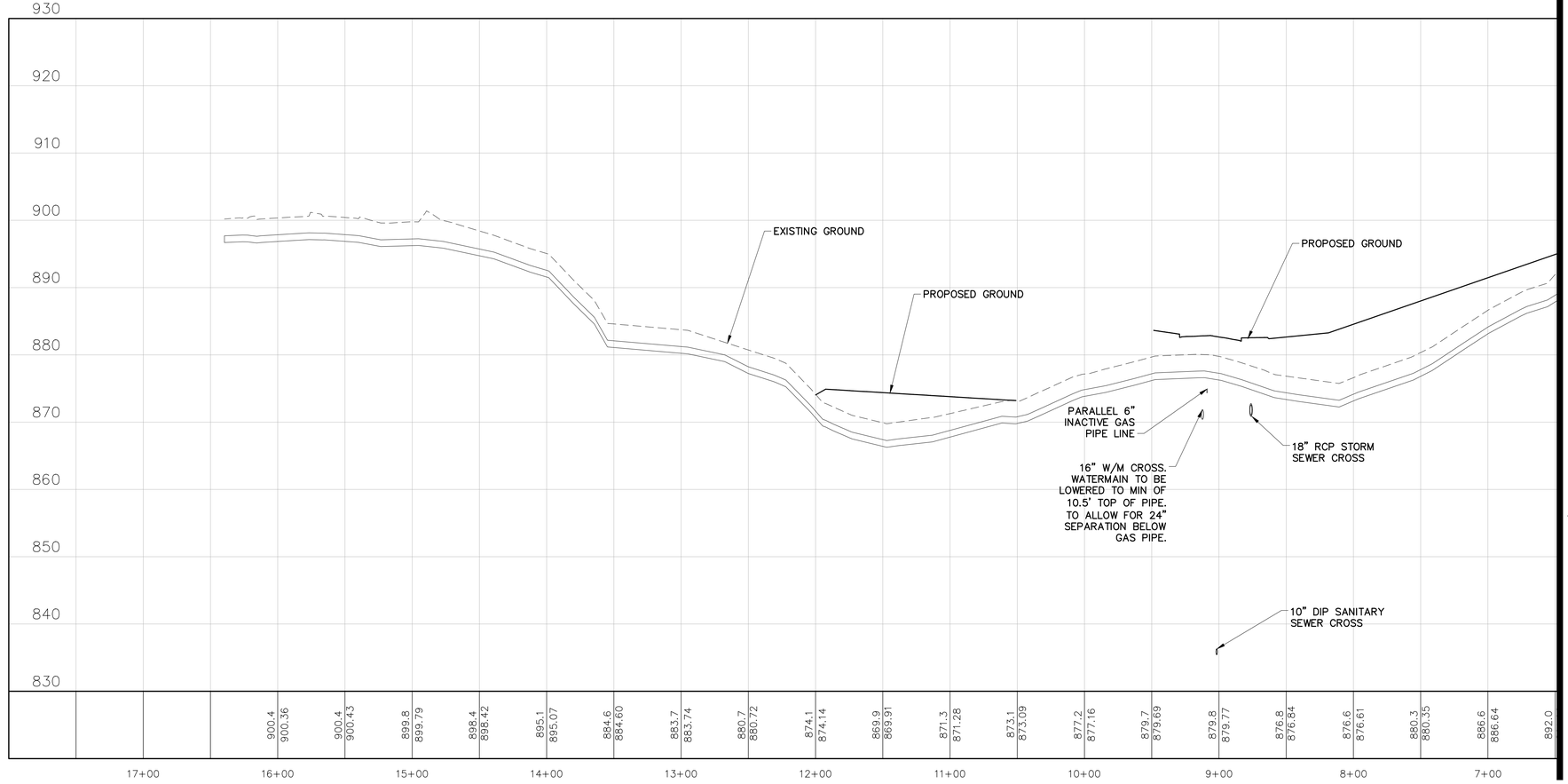

LEGEND:

- EASEMENT LINE
- BUILDING SETBACK
- PROPERTY LINE
- LOT LINE
- ROW
- 789 EXISTING CONTOUR
- 789 PROPOSED CONTOUR
- PROPOSED STORM SEWER
- PROPOSED SANITARY SEWER
- PROPOSED WATERMAIN
- PROPOSED CATCH BASIN
- PROPOSED SANITARY MANHOLE
- PROPOSED GATE VALVE
- PROPOSED HYDRANT

N

0 25 50 100
SCALE IN FEET

FOR REVIEW ONLY
PRELIMINARY
NOT FOR CONSTRUCTION

ALLIANT
733 Marquette Avenue
Suite 700
Minneapolis, MN 55402
612.758.3080
www.alliant-inc.com

CANVAS AT INVER GROVE HEIGHTS
INVER GROVE HEIGHTS, MINNESOTA

FINAL PLAT - PHASE 1

GAS PIPELINE PLAN AND PROFILE

I hereby certify that this plan, specification, or report was prepared by me or under my direct supervision and that I am a duly Licensed PROFESSIONAL ENGINEER under the laws of the State of MINNESOTA

MARK RAUSCH, PE

Date License No.

QUALITY ASSURANCE/CONTROL

BY DATE

DATE	ISSUE
11-16-2020	FINAL PLAT-PH1 SUBMITTAL

PROJECT TEAM DATA

DESIGNED: MPR
DRAWN: SIL, TAS
PROJECT NO: 220-0092

14

SHEET 14 OF 39

Drawing name: G:\pw_working\projectwise\mwregional\dms247931\2000922gas.dwg Nov 16, 2020 - 3:30pm

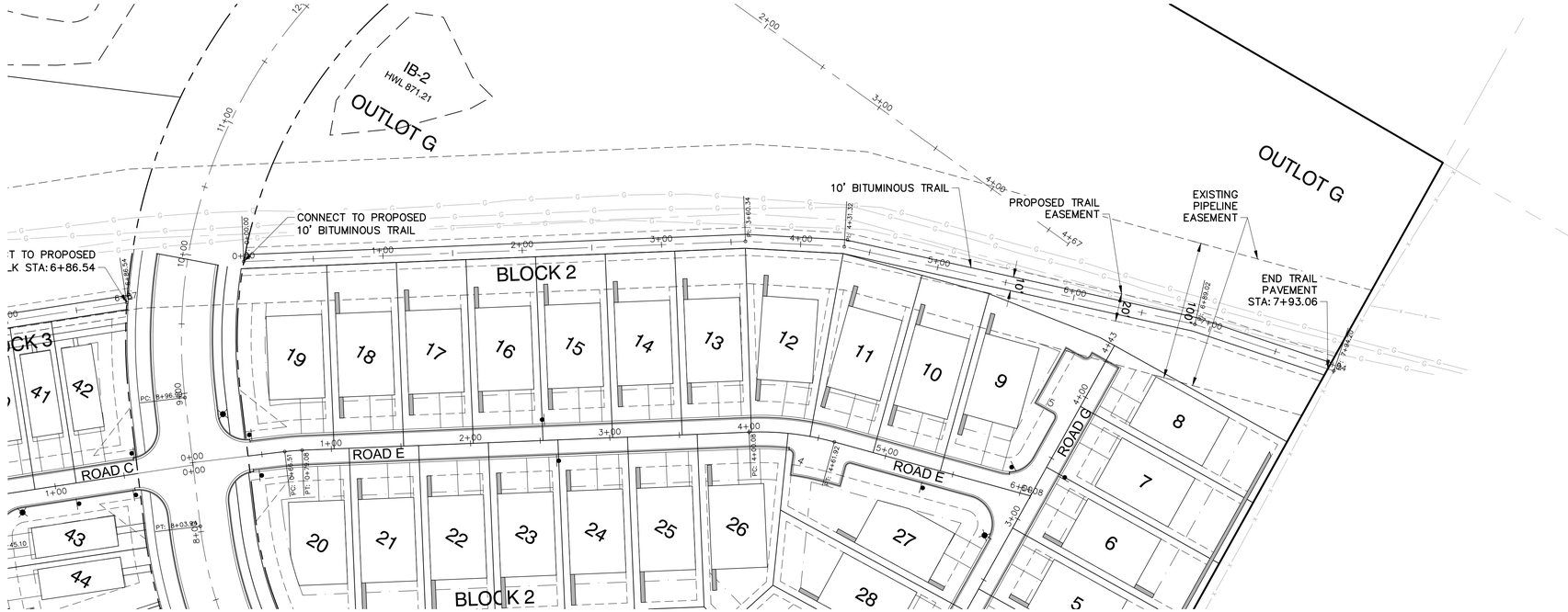

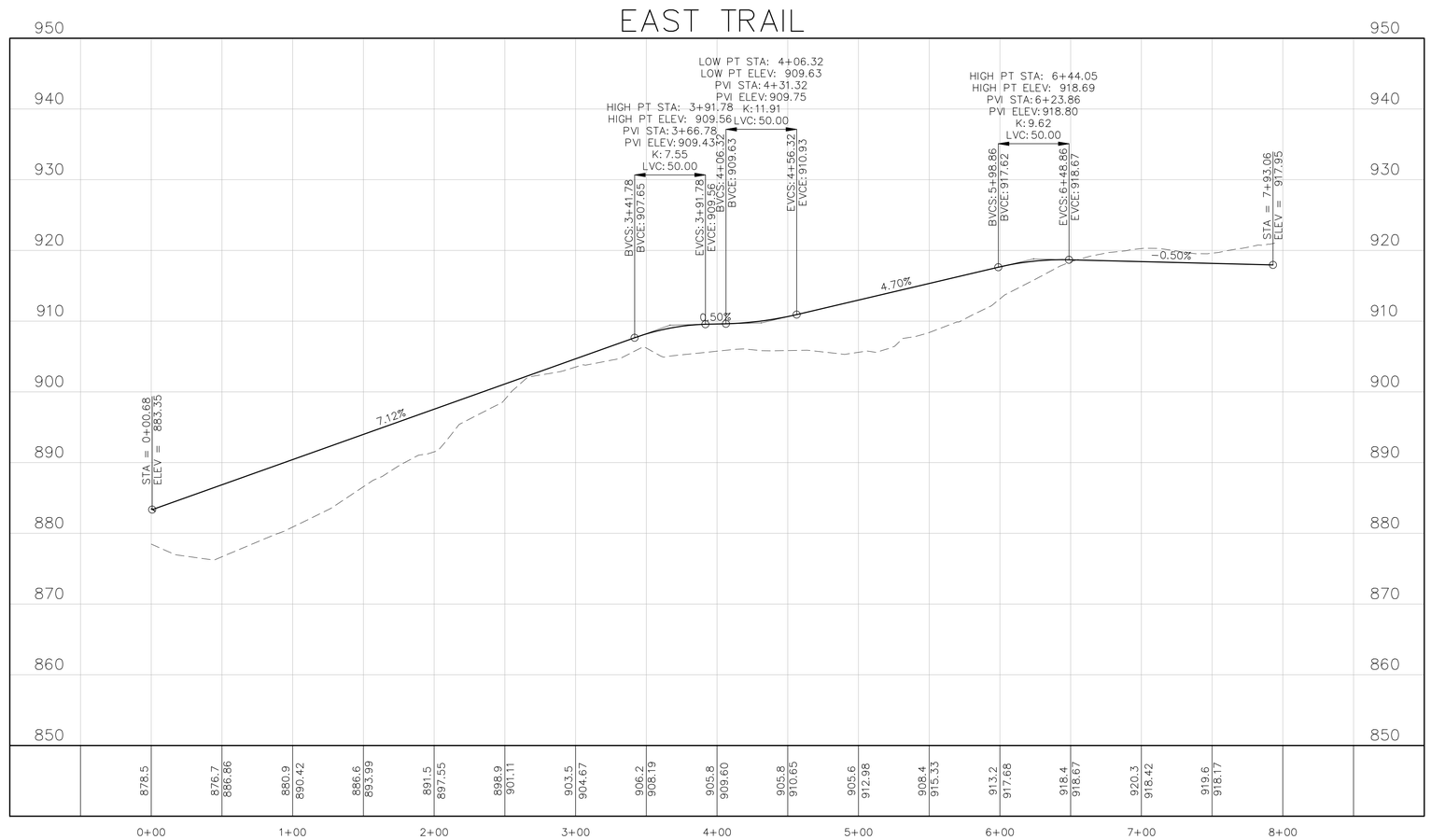

LEGEND:

- EASEMENT LINE
- BUILDING SETBACK
- PROPERTY LINE
- LOT LINE
- ROW

N

0 25 50 100
SCALE IN FEET

FOR REVIEW ONLY
PRELIMINARY
NOT FOR CONSTRUCTION

Drawing name: G:\pw_working\projectwise\mwregional\dms24793\200092trail.dwg Nov 16, 2020 - 3:30pm

ALLIANT
733 Marquette Avenue
Suite 700
Minneapolis, MN 55402
612.758.3080
www.alliant-inc.com

CANVAS AT INVER GROVE HEIGHTS

INVER GROVE HEIGHTS, MINNESOTA

FINAL PLAT - PHASE 1

TRAIL PLAN AND PROFILE

I hereby certify that this plan, specification, or report was prepared by me or under my direct supervision and that I am a duly Licensed PROFESSIONAL ENGINEER under the laws of the State of MINNESOTA

MARK RAUSCH, PE

Date License No.

QUALITY ASSURANCE/CONTROL

BY	DATE

DATE	ISSUE
11-16-2020	FINAL PLAT-PH1 SUBMITTAL

PROJECT TEAM DATA

DESIGNED:	MPR
DRAWN:	SIL, TAS
PROJECT NO:	220-0092

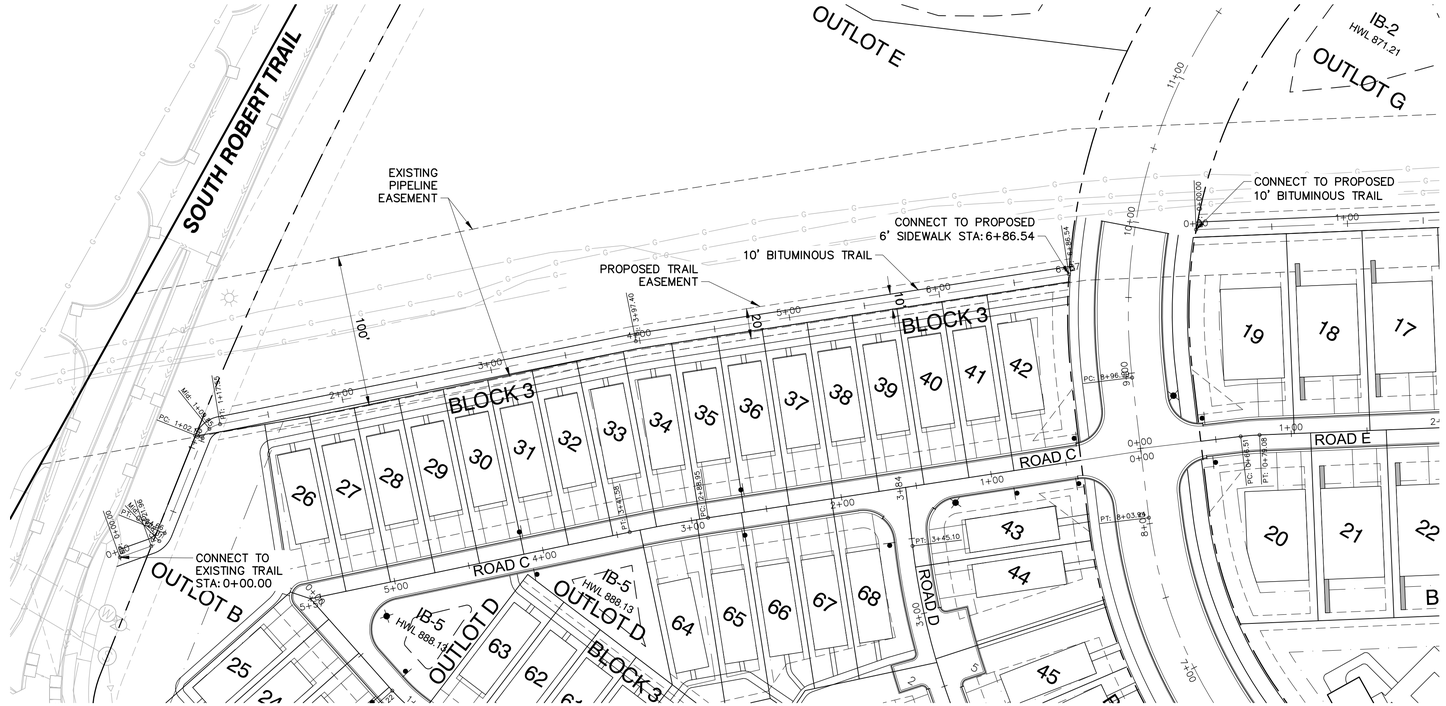

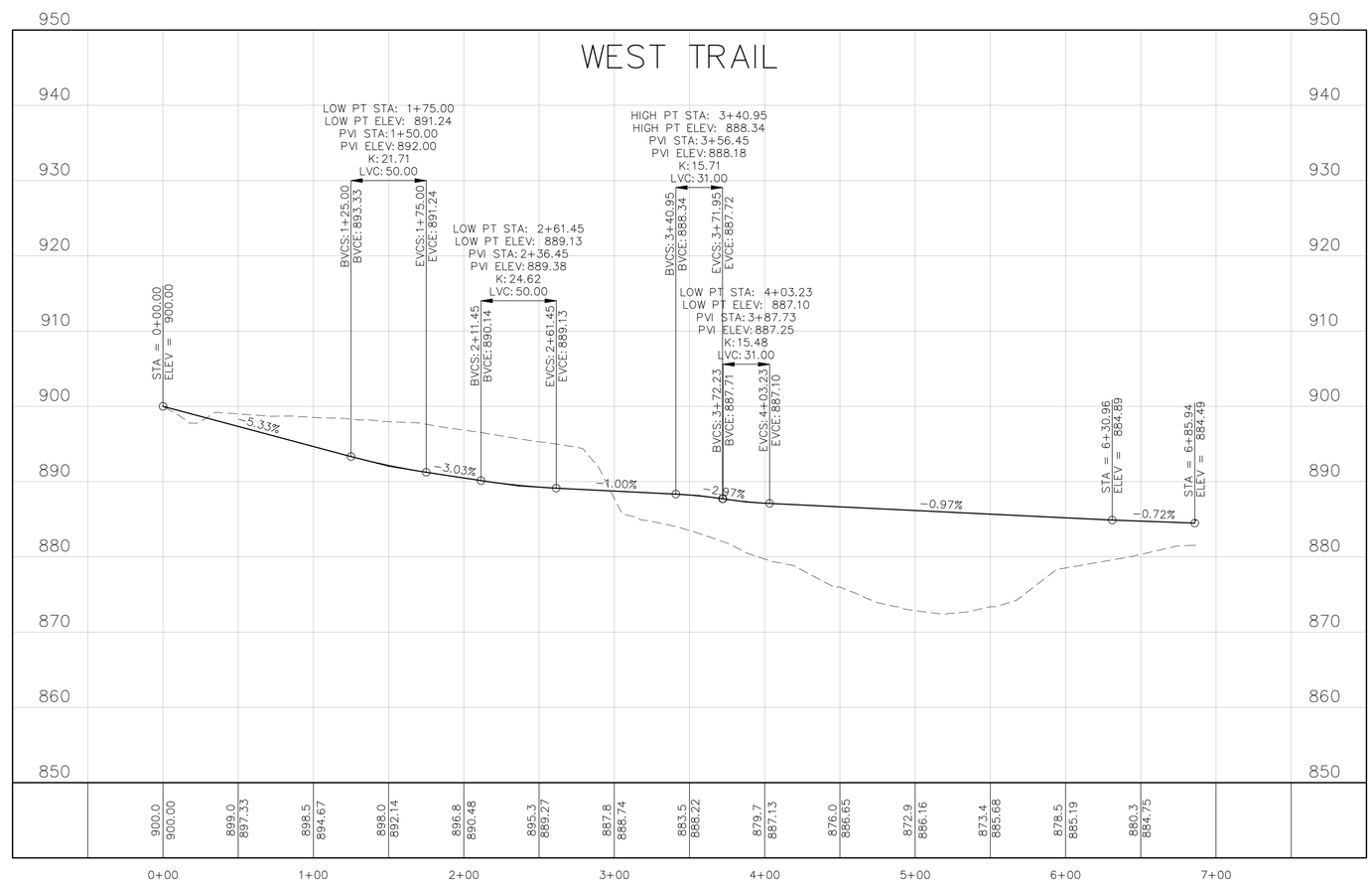

LEGEND:

- EASEMENT LINE
- BUILDING SETBACK
- PROPERTY LINE
- LOT LINE
- ROW

N

0 25 50 100
SCALE IN FEET

FOR REVIEW ONLY
PRELIMINARY
NOT FOR CONSTRUCTION

Drawing name: G:\eng working\projectwise\mwregional\dms24793\200092trail.dwg Nov 16, 2020 - 3:31pm

ALLIANT
733 Marquette Avenue
Suite 700
Minneapolis, MN 55402
612.758.3080
www.alliant-inc.com

CANVAS AT INVER GROVE HEIGHTS

INVER GROVE HEIGHTS, MINNESOTA

FINAL PLAT - PHASE 1

TRAIL PLAN AND PROFILE

I hereby certify that this plan, specification, or report was prepared by me or under my direct supervision and that I am a duly Licensed PROFESSIONAL ENGINEER under the laws of the State of MINNESOTA

MARK RAUSCH, PE

Date License No.

QUALITY ASSURANCE/CONTROL

BY DATE

DATE	ISSUE
11-16-2020	FINAL PLAT-PH1 SUBMITTAL

PROJECT TEAM DATA

DESIGNED: MPR
DRAWN: SIL, TAS
PROJECT NO: 220-0092

16

SHEET 16 OF 39

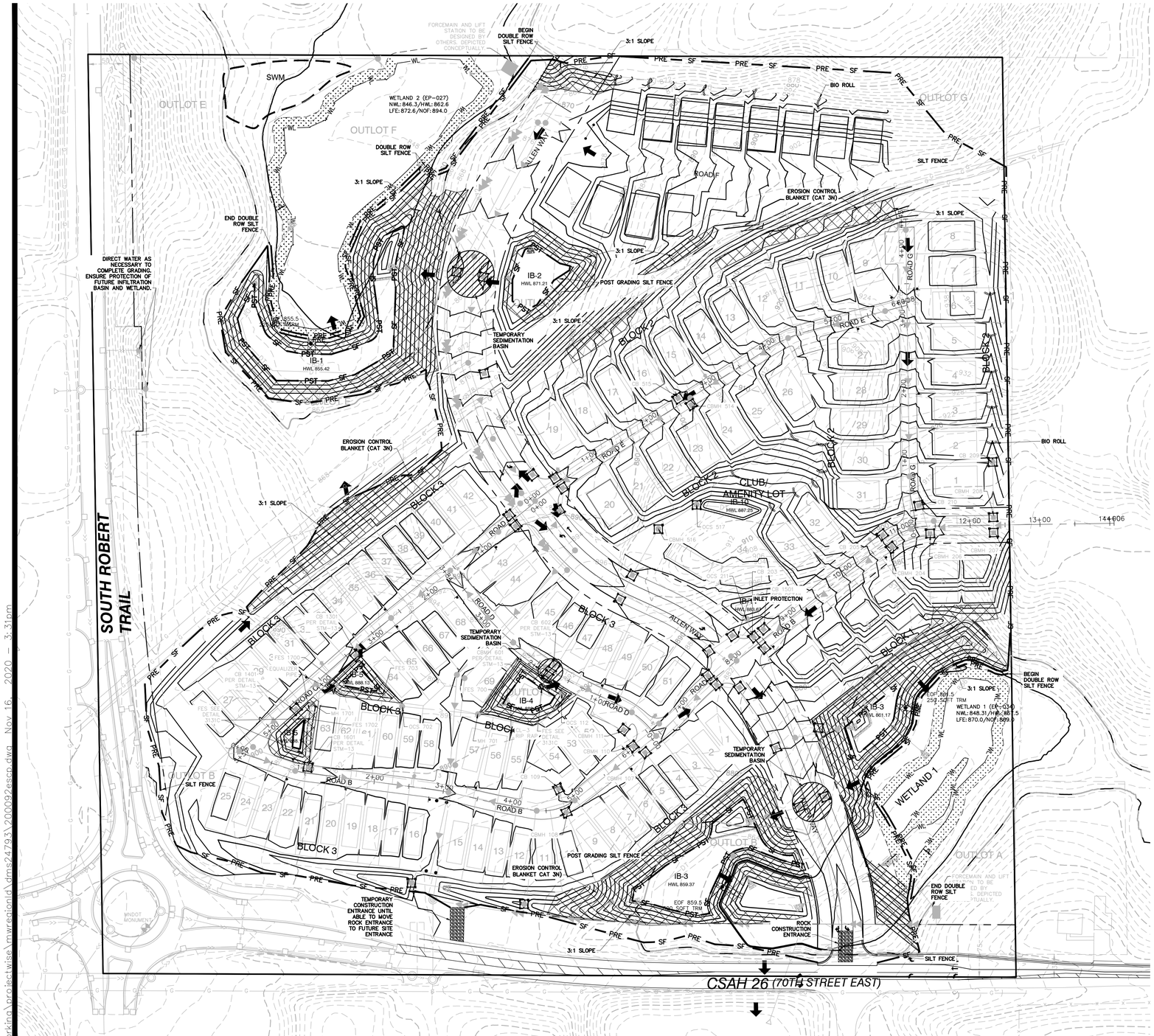

NOTE TO CONTRACTOR:

THE MASS GRADING CONTRACTOR IS RESPONSIBLE FOR INSTALLATION OF ALL EROSION AND SEDIMENT CONTROL BEST MANAGEMENT PRACTICES (BMPS) AS SHOWN IN THE MASS GRADING SWPPP (EXCEPT FOR POST GRADE BMPS NEEDED AFTER UTILITY CONSTRUCTION ACTIVITY). THE BMPS ARE TO BE INSTALLED AT A MINIMUM AS SHOWN IN THE PLAN, IF CONDITIONS ARISE, ADDITIONAL BMP SUPPLEMENTATION TO PREVENT SITE EROSION OR SEDIMENT TRANSPORT MAY BE NECESSARY. THE MASS GRADING CONTRACTOR IS RESPONSIBLE FOR ALL BMPS REQUIRED TO COMPLETE THE MASS GRADING ACTIVITIES AND SUBSEQUENT TEMPORARY SOIL STABILIZATION NECESSARY TO PREPARE SITE FOR STREET AND UTILITY CONSTRUCTION AND HOME BUILDING. AT THE COMPLETION OF MASS GRADING WORK AND SATISFACTORY SITE SOIL STABILIZATION, THE DEVELOPER AND MASS GRADING CONTRACTOR SHALL COORDINATE THE TRANSFER OF NPDES PERMIT RESPONSIBILITIES TO THE STREET AND UTILITY CONTRACTOR AND THE CITY.

THE STREET AND UTILITY CONTRACTOR AND CITY WILL THEN ASSUME THE RESPONSIBILITY TO PROVIDE INSPECTION AND MAINTENANCE OF ANY IN-PLACE BMPS AS WELL AS INSTALL THE ADDITIONAL BMPS REQUIRED IN THE STREET AND UTILITY CONSTRUCTION DOCUMENT SWPPP. UPON COMPLETION OF STREET AND UTILITY CONSTRUCTION, THE STREET AND UTILITY CONTRACTOR SHALL REMOVE ANY BMPS INSTALLED DURING THE STREET AND UTILITY PHASE THAT ARE NO LONGER REQUIRED AND COORDINATE THE TRANSFER OF NPDES PERMIT RESPONSIBILITIES BACK TO THE DEVELOPER OR TERMINATE THE PORTION OF THE NPDES PERMIT TRANSFERRED TO THE CITY AND THEIR CONTRACTOR.

CONSTRUCTION SEQUENCING:

MASS GRADING PHASE:

1. INSTALL STABILIZED CONSTRUCTION ENTRANCES.
2. PREPARE TEMPORARY PARKING AND STORAGE AREA.
3. INSTALL THE PRE-GRADING SILT FENCES AND INLET PROTECTION BMPS ON THE SITE.
4. CONSTRUCT ALL PRE-GRADING EROSION AND SEDIMENTATION CONTROL BMPs.
5. COMPLETE MASS GRADING AND INSTALL TEMPORARY AND PERMANENT SEEDING AND PLANTING.
6. CONSTRUCT POST-GRADING SILT FENCE AND BMPS ON THE SITE.

STREET & UTILITY PHASE:

1. INSTALL UTILITIES, UNDERDRAINS, STORM SEWERS, CURBS AND GUTTERS.
2. INSTALL RIP RAP AROUND OUTLET STRUCTURES.
3. INSTALL INLET PROTECTION AROUND ALL STORM SEWER STRUCTURES.
4. PREPARE SITE FOR PAVING.
5. PAVE SITE.
6. INSTALL INLET PROTECTION DEVICES.
7. INSTALL POST STREET AND UTILITY SILT FENCE.
8. REMOVE ALL TEMPORARY EROSION AND SEDIMENT CONTROL DEVICES (ONLY IF SITE IS STABILIZED), IF REQUIRED BY THE CONTRACT

ACTIVE SWPPP LEGEND / SCHEDULE

CONSTRUCTION SEQUENCE	APR	MAY	JUN	JUL	AUG	SEP	OCT	NOV	DEC	JAN	FEB	MAR	APR
MULCH BERM													
FIBER ROLLS / MULCH SOCKS													
SILT FENCE													
TEMPORARY MULCH COVER													
TEMPORARY HYDROMULCH													
EROSION CONTROL BLANKET													
ROCK DRIVEWAY / ROCK PADS													
INLET PROTECTION DEVICES													
PAVEMENT (DRIVEWAY/ROADS)													
SOD													
STOCKPILES													

NOTE: CONTRACTOR, GENERAL CONTRACTOR OR SWPPP INSPECTOR TO COMPLETE TABLE AS GRADING PROGRESSES

SWPPP BMP QUANTITIES (PER PLAN):

1. STANDARD SILT FENCE
2. EROSION CONTROL BLANKET
3. INLET PROTECTION
4. TEMPORARY SEEDING

SEDIMENT BARRIERS

1. SILT FENCE (MnDOT 3886)

INLET PROTECTION DEVICES

1. WIMCO (MnDOT TYPE A & C)
2. INFRASAFE STORM DRAIN/CULVERT
3. SILT SACK (MnDOT TYPE A)
4. DANDY BAG (MnDOT TYPE B)

ANTI-TRACKING CONTROL

1. 2" CRUSHED CLEAR ROCK (LAND DEVELOPMENT)

TEMPORARY SEED MIX

1. MN 21-112 (OATS 21-120 DAY STABILIZATION)
2. MN 22-111 (2 YEAR STABILIZATION)

PERMANENT SEED MIX/STABILIZATION

1. MN 25-141 (ROADSIDE MIX)

STABILIZATION BMP'S

1. STRAW/HAY MnDOT TYPE 1 MULCH
2. EROSION CONTROL BLANKET MnDOT CAT. 3
3. HYDROMULCH MnDOT TYPE 5
4. TURF REINFORCEMENT MAT SC250 NORTH AMERICAN GREEN OR EQUAL-MNDOT CAT 6

GRADING ACTIVITY

1. CONCRETE WASHOUT IS DONE TRUCK BY TRUCK WITH A MOBILE WASHOUT SYSTEM PROVIDED AND COMPLETED BY THE CONCRETE CONTRACTOR.

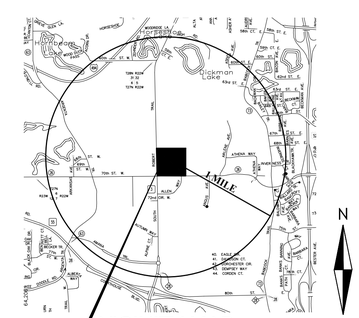

PROJECT LOCATION

VICINITY MAP
SCALE: 1" = 3000'

EROSION CONTROL RESPONSIBLE PARTY:

OWNER/DEVELOPER
WATERMARK EQUITY GROUP
4000 SHORELINE DRIVE
SPRING LAKE PARK, MN 55384
CONTACT: IAN PETERSON
PHONE: 312-813-5228
EM: ipeterson@wmprops.com

SWPPP INSPECTOR
TBD

CONTRACTOR
TBD

NOTES:

1. SEE SHEET ## FOR ALL EROSION AND SEDIMENT CONTROL NOTES AND DETAILS.

N

0 40 80 160
SCALE IN FEET

FOR REVIEW ONLY
PRELIMINARY
NOT FOR CONSTRUCTION

LEGEND:

- DENOTES SOIL BORING
- PRE — SF — PROPOSED SILT FENCE (PRE GRADING)
- PST — SF — PROPOSED SILT FENCE (POST GRADING)
- 980 — DENOTES PROPOSED CONTOURS
- DENOTES EXISTING STORM SEWER
- DENOTES PROPOSED STORM SEWER
- DENOTES INLET SEDIMENT CONTROL
- DENOTES BIO ROLL
- EROSION CONTROL BLANKET CAT 3N
- ROCK CONSTRUCTION ENTRANCE ANTI-TRACKING CONTROL
- DENOTES TEMPORARY SEDIMENTATION BASIN
- DRAINAGE DIRECTION

ALLIANT
733 Marquette Avenue
Suite 700
Minneapolis, MN 55402
612.758.3080
www.alliant-inc.com

CANVAS AT INVER GROVE HEIGHTS

INVER GROVE HEIGHTS, MINNESOTA

FINAL PLAT - PHASE 1

EROSION AND SEDIMENT CONTROL PLAN

I hereby certify that this plan, specification, or report was prepared by me or under my direct supervision and that I am a duly Licensed PROFESSIONAL ENGINEER under the laws of the State of MINNESOTA

MARK RAUSCH, PE

Date License No.

QUALITY ASSURANCE/CONTROL

BY	DATE

DATE	ISSUE
11-16-2020	FINAL PLAT-PH1 SUBMITTAL

PROJECT TEAM DATA

DESIGNED:	MPR
DRAWN:	SIL, TAS
PROJECT NO:	220-0092

Drawing name: C:\pw_working\projectwise\mwregion1\dms24793\200092esch.dwg Nov 16, 2020 - 3:31pm

UTILITY NOTES:

1. EXISTING UTILITIES, SERVICE LOCATIONS AND ELEVATIONS SHALL BE VERIFIED IN FIELD PRIOR TO CONSTRUCTION.
2. MAINTAIN A MIN 18" VERTICAL SEPARATION AT ALL PIPE CROSSINGS. WATER AND SANITARY SEWER TRUNK LINES TO MAINTAIN 10' HORIZONTAL SEPARATION. LOWER WATERMAIN AS NECESSARY.
3. CONTRACTOR IS RESPONSIBLE FOR ALL PERMITS PRIOR TO THE START OF CONSTRUCTION.
4. PROVIDE POLYSTYRENE INSULATION FOR ALL STORM SEWER AND WATERMAIN CROSSINGS WHERE VERTICAL OR HORIZONTAL SEPARATION IS LESS THAN 3'.
5. ALL UTILITY WORK WITHIN THE R.O.W. SHALL COMPLY WITH THE CITY OF INVER GROVE HEIGHTS ENGINEERING GUIDELINES.
6. NOTIFY GOPHER STATE ONE CALL 48 HOURS IN ADVANCE OF ANY UTILITY WORK.
7. PROVIDE TEMPORARY TRAFFIC CONTROL IN COMPLIANCE WITH MNDOT "TEMPORARY TRAFFIC CONTROL ZONE LAYOUTS–FIELD MANUAL" LATEST REVISION, FOR ANY CONSTRUCTION WITHIN PUBLIC R.O.W.
8. ALL SANITARY MANHOLES TO BE 48" DIAMETER CONCRETE W/NEENAH R–1642 CASTING, UNLESS NOTED OTHERWISE.
9. WATERMAIN, SERVICES, AND VALVES SHALL BE INSTALLED WITH MINIMUM 7.5' OF COVER, THOUGH WATERMAIN DEPTH WILL BE INCREASED WHERE NECESSARY TO AVOID CONFLICT WITH SANITARY SEWER.
10. WATER SERVICES SHALL BE 1" DIA. COPPER, TYPE K, W/ 1" CORP. STOP + 1" CURB BOX.
11. SEWER SERVICES SHALL BE 4" PVC, SCH 40. MINIMUM 2% SLOPE UNLESS OTHERWISE NOTED ON THE PLANS.
12. WATER SERVICES MAY BE PLACED IN SAME TRENCH AS SEWER SERVICES PROVIDED THAT A 18" VERTICAL & A 36" HORIZONTAL SEPARATION ARE MAINTANED AND PIPE MATERIALS MEET THE CITY AND BUILDING CODES.
13. ALL 6" AND 8" WATERMAIN SHALL BE DIP CL–52.
14. ALL HYDRANTS SHALL HAVE A 6" LEAD WITH APPROPRIATE FITTINGS, EITHER A 8X6" TEE OR A 6" REDUCER.
15. CITY UTILITY DIVISION WILL OPERATE EXISTING VALVES. COORDINATE SHUT OFF AT WATER CONNECTION WITH A 48 HOUR NOTICE.
16. ALL 16" VALVES SHALL BE BUTTERFLY VALVES AND LOCATED IN MANHOLES.

LEGEND:

- EXISTING GATE VALVE
- EXISTING HYDRANT
- EXISTING WATERMAIN
- EXISTING CATCH BASIN
- EXISTING STORM MANHOLE
- EXISTING STORM SEWER
- EXISTING SANITARY MANHOLE
- EXISTING SANITARY SEWER
- PROPOSED STORM SEWER
- PROPOSED SANITARY SEWER
- PROPOSED WATERMAIN
- PROPOSED CATCH BASIN
- PROPOSED SANITARY MANHOLE
- PROPOSED GATE VALVE
- PROPOSED HYDRANT

FOR REVIEW ONLY
PRELIMINARY
NOT FOR CONSTRUCTION

N

0 40 80 160
SCALE IN FEET

ALLIANT
733 Marquette Avenue
Suite 700
Minneapolis, MN 55402
612.758.3080
www.alliant-inc.com

CANVAS AT INVER GROVE HEIGHTS
INVER GROVE HEIGHTS, MINNESOTA
FINAL PLAT - PHASE 1
SANITARY SEWER AND WATERMAIN PLAN

I hereby certify that this plan, specification, or report was prepared by me or under my direct supervision and that I am a duly Licensed PROFESSIONAL ENGINEER under the laws of the State of MINNESOTA

MARK RAUSCH, PE

Date License No.

QUALITY ASSURANCE/CONTROL

BY DATE

DATE	ISSUE
11–16–2020	FINAL PLAT–PH1 SUBMITTAL

PROJECT TEAM DATA

DESIGNED: MPR
DRAWN: SIL, TAS
PROJECT NO: 220–0092

Drawing name: C:\pw_working\projectwise\mwregional\dms24793\200092utl.dwg Nov 16, 2020 – 3:32pm

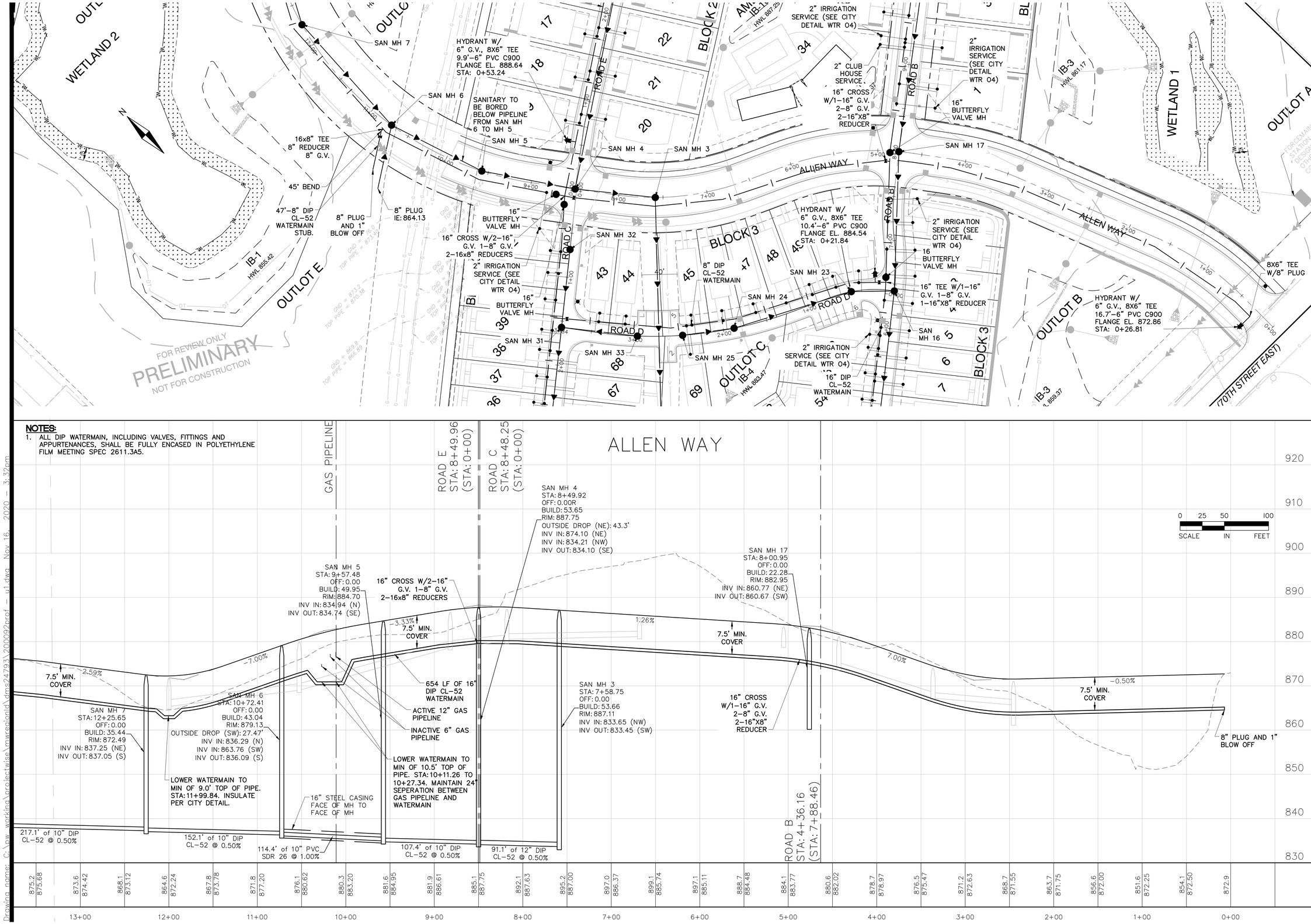

NOTES:

1. ALL DIP WATERMAIN, INCLUDING VALVES, FITTINGS AND APPURTENANCES, SHALL BE FULLY ENCASED IN POLYETHYLENE FILM MEETING SPEC 2611.3A5.

ALLIANT
733 Marquette Avenue
Suite 700
Minneapolis, MN 55402
612.758.3080
www.alliant-inc.com

CANVAS AT INVER GROVE HEIGHTS

INVER GROVE HEIGHTS, MINNESOTA

FINAL PLAT - PHASE 1

SANITARY SEWER AND WATERMAIN PLAN AND PROFILES

I hereby certify that this plan, specification, or report was prepared by me or under my direct supervision and that I am a duly Licensed PROFESSIONAL ENGINEER under the laws of the State of MINNESOTA

MARK RAUSCH, PE

Date License No.

QUALITY ASSURANCE/CONTROL

BY DATE

DATE	ISSUE
11-16-2020	FINAL PLAT-PH1 SUBMITTAL

PROJECT TEAM DATA

DESIGNED: MPR
DRAWN: SIL, TAS
PROJECT NO: 220-0092

Drawing name: G:\cw working\projectwise\rowregion1\dms24793\200092prof - u1.dwg Nov 16, 2020 - 3:32pm

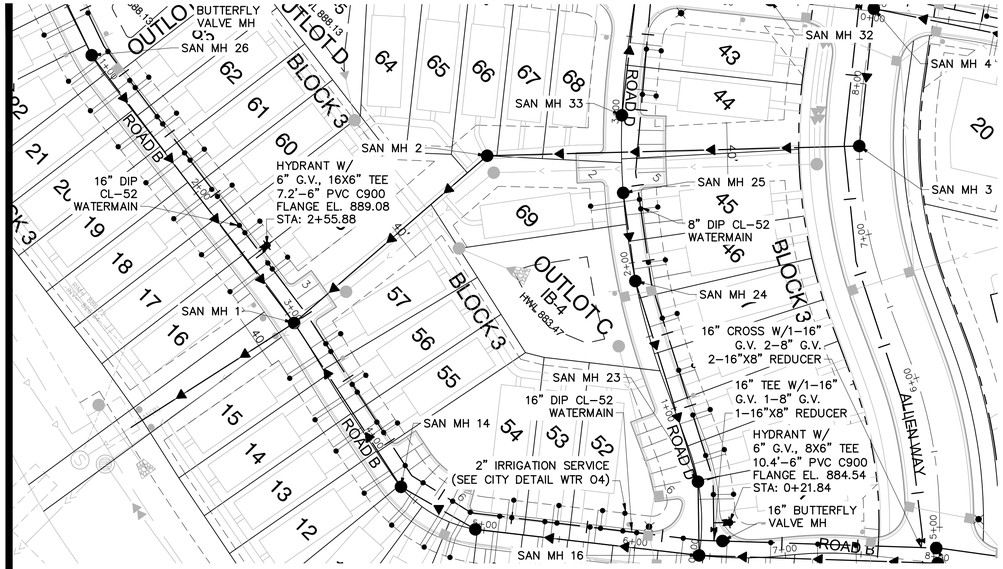

NOTES:

1. ALL DIP WATERMAIN, INCLUDING VALVES, FITTINGS AND APPURTENANCES, SHALL BE FULLY ENCASED IN POLYETHYLENE FILM MEETING SPEC 2611.3A5.

FOR REVIEW ONLY
PRELIMINARY
NOT FOR CONSTRUCTION

0 25 50 100
SCALE IN FEET

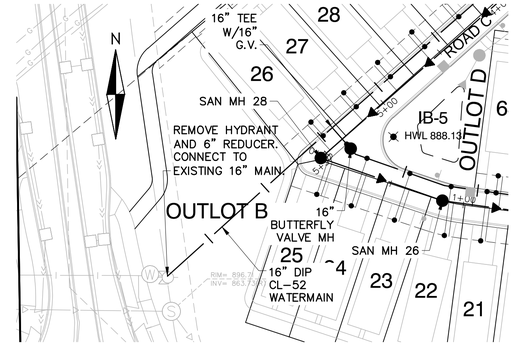

EXISTING WATERMAIN CONNECTION

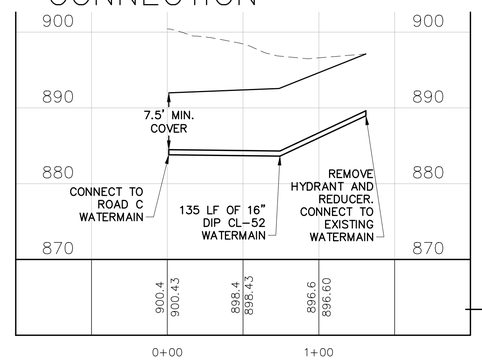

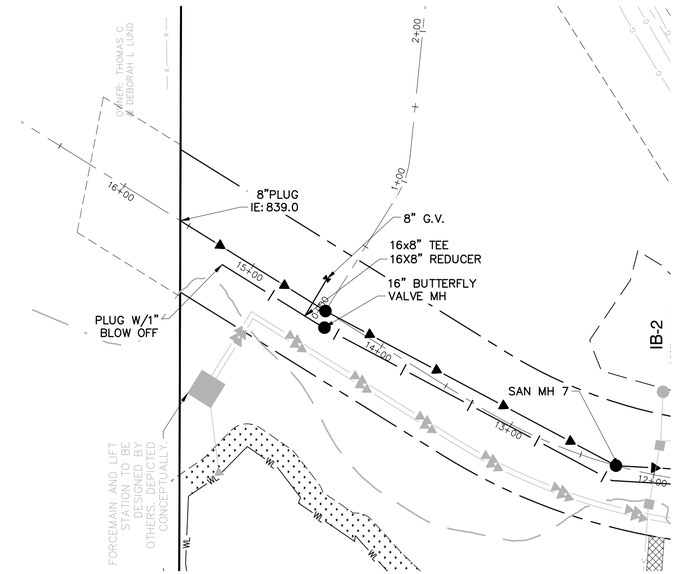

ALLEN WAY

TRUNK SANITARY SEWER CONNECTION

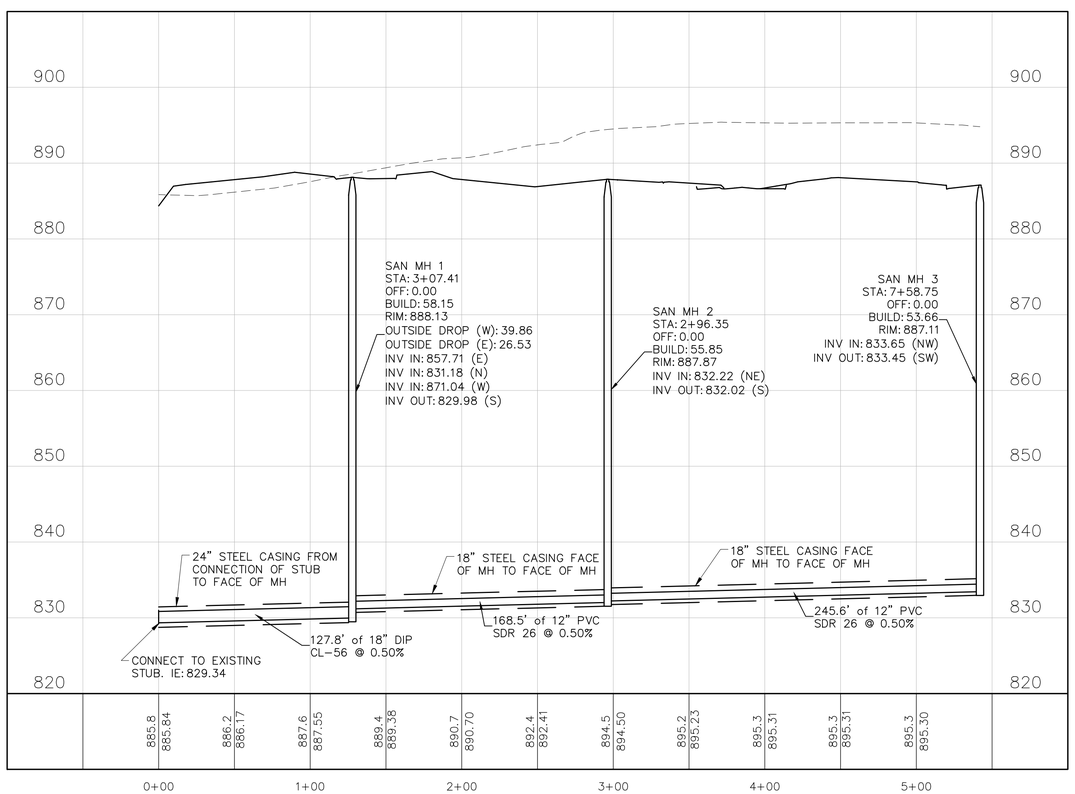

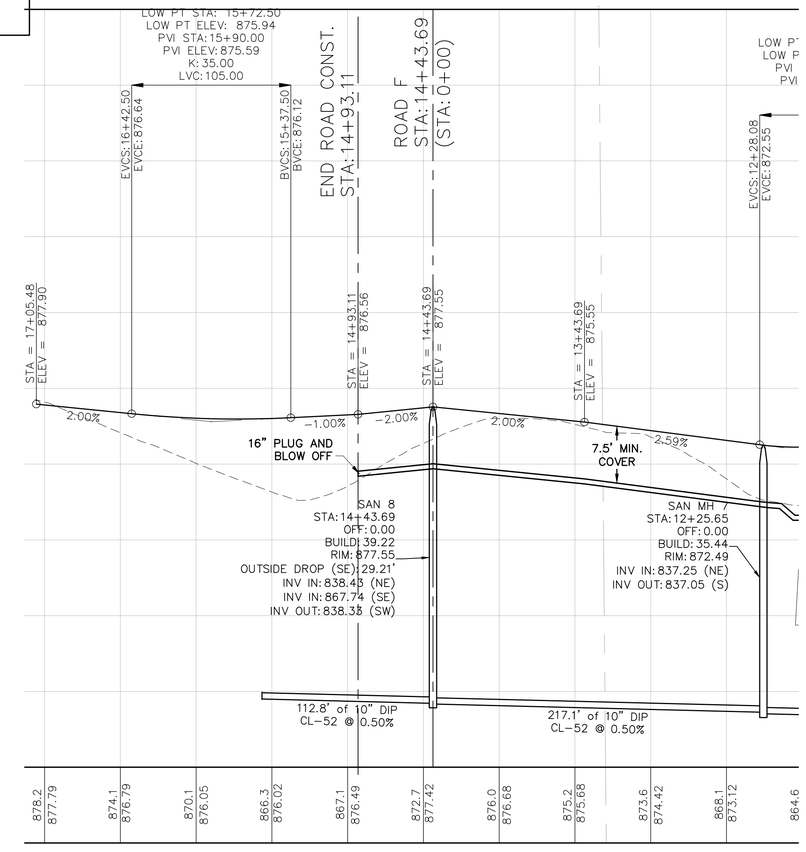

ALLIANT
733 Marquette Avenue
Suite 700
Minneapolis, MN 55402
612.758.3080
www.alliant-inc.com

CANVAS AT INVER GROVE HEIGHTS

INVER GROVE HEIGHTS, MINNESOTA

FINAL PLAT - PHASE 1

SANITARY SEWER AND WATERMAIN PLAN AND PROFILES

I hereby certify that this plan, specification, or report was prepared by me or under my direct supervision and that I am a duly Licensed PROFESSIONAL ENGINEER under the laws of the State of MINNESOTA

MARK RAUSCH, PE

Date License No.

QUALITY ASSURANCE/CONTROL

BY	DATE

DATE	ISSUE
11-16-2020	FINAL PLAT-PH1 SUBMITTAL

PROJECT TEAM DATA

DESIGNED: MPR
DRAWN: SIL, TAS
PROJECT NO: 220-0092

Drawing name: G:\pw_working\projectwise\mwregional\dms24793\200092prof - u5.dwg Nov 16, 2020 - 3:33pm

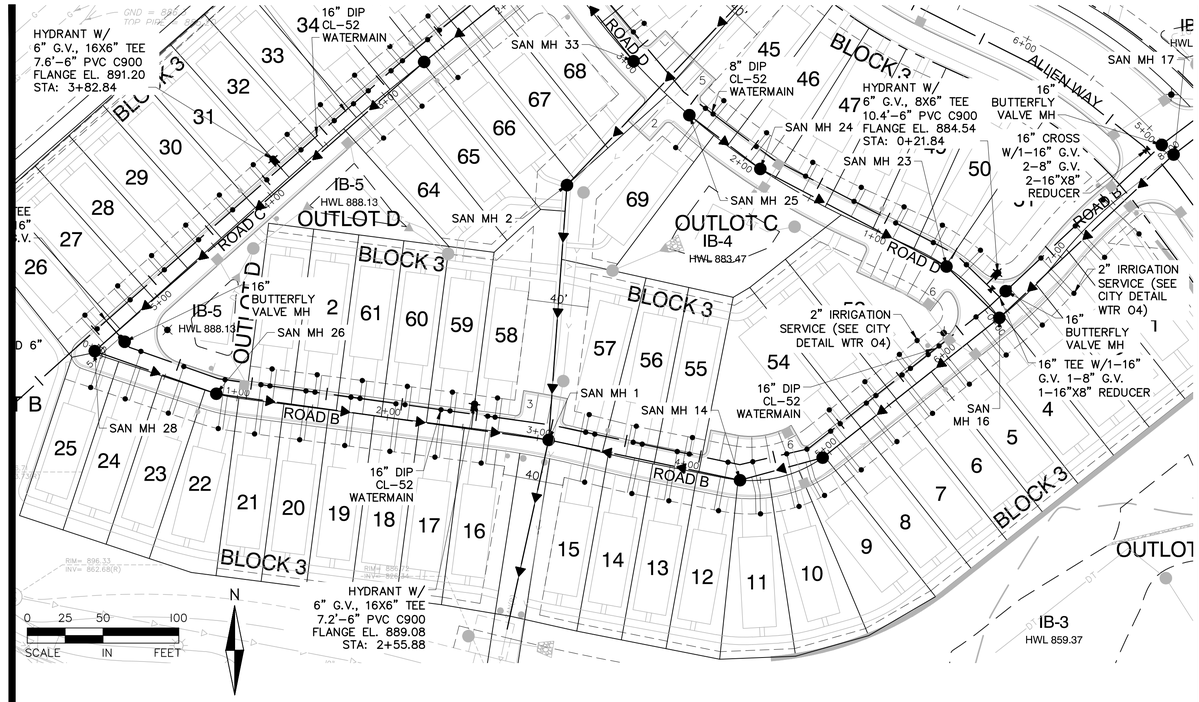

BLOCK	LOT	S	IE	CBE	R
3	7	42	859.03	886.30	22
3	8	12	859.03	886.60	22
3	9	45	858.55	887.00	23
3	10	31	858.55	887.00	23
3	11	8	858.55	887.30	24
3	12	116	857.71	887.60	25
3	13	82	857.71	888.00	26
3	14	58	857.71	888.30	26
3	15	26	857.71	888.50	27
3	16	39	871.04	889.50	9
3	17	70	871.04	889.80	9
3	18	100	871.04	890.20	10
3	19	130	871.04	890.50	10
3	20	160	871.04	890.90	10
3	21	190	871.04	891.40	11
3	22	214	871.04	892.10	12
3	23	23	872.23	892.30	11
3	24	53	872.23	892.70	12
3	25	77	872.23	893.00	12
3	43	38	875.15	888.60	2
3	44	68	875.15	888.10	0
3	45	44	874.61	886.80	0
3	46	8	874.61	886.40	0
3	47	107	873.73	886.40	0
3	48	71	873.73	886.50	0
3	49	40	873.73	886.30	0
3	50	24	873.73	885.90	0
3	51	37	873.15	885.40	0
3	52	79	859.03	885.90	20
3	53	50	859.03	886.20	21
3	54	20	859.03	886.60	22
3	55	90	857.71	887.80	25
3	56	52	857.71	888.30	26
3	57	20	857.71	888.60	27
3	58	34	871.04	889.50	9
3	59	64	871.04	889.70	9
3	60	94	871.04	890.10	10
3	61	124	871.04	890.40	10
3	62	154	871.04	890.80	10
3	63	184	871.04	891.10	10
3	69	50	874.61	886.90	0

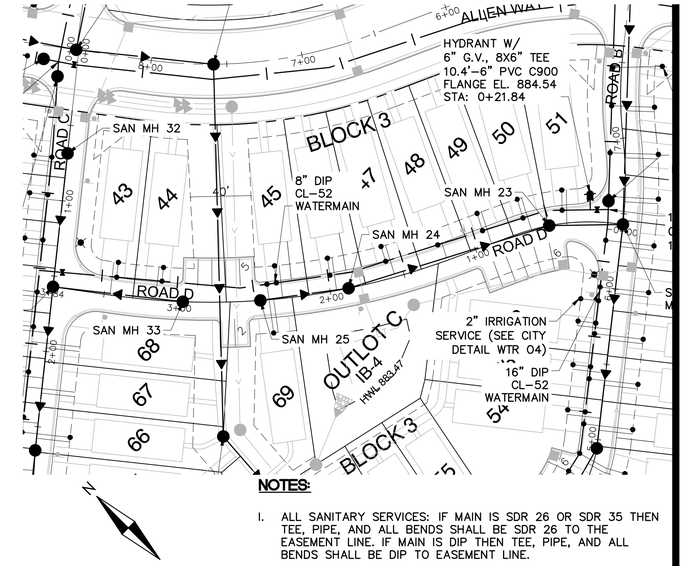

LEGEND:

S = SANITARY SERVICE WYE STATION (FROM DOWNSTREAM MH)
IE = SANITARY SERVICE INVERT ELEVATION
CBE = CURB BOX ELEVATION
R = RISER LENGTH (ACTUAL LENGTH, NOT VERT. RISE (VERTICAL HEIGHT = R x 0.707)

NOTES:

1. ALL SANITARY SERVICES: IF MAIN IS SDR 26 OR SDR 35 THEN TEE, PIPE, AND ALL BENDS SHALL BE SDR 26 TO THE EASEMENT LINE. IF MAIN IS DIP THEN TEE, PIPE, AND ALL BENDS SHALL BE DIP TO EASEMENT LINE.
2. ALL SANITARY SERVICSES SHALL BE @ 2.0% MIN. SLOPE.
3. ALL SANITARY MANHOLES SHALL BE 48" IN DIAMETER AND HAVE NEENAH R-1642 CASTINGS UNLESS NOTED OTHERWISE ON THE PLAN.
4. ALL WATER SERVICES SHALL BE 1" "TYPE K" COPPER.
5. ALL DIP WATERMAIN, INCLUDING VALVES, FITTINGS AND APPURTENANCES, SHALL BE FULLY ENCASED IN POLYETHYLENE FILM MEETING SPEC 2611.3A5.

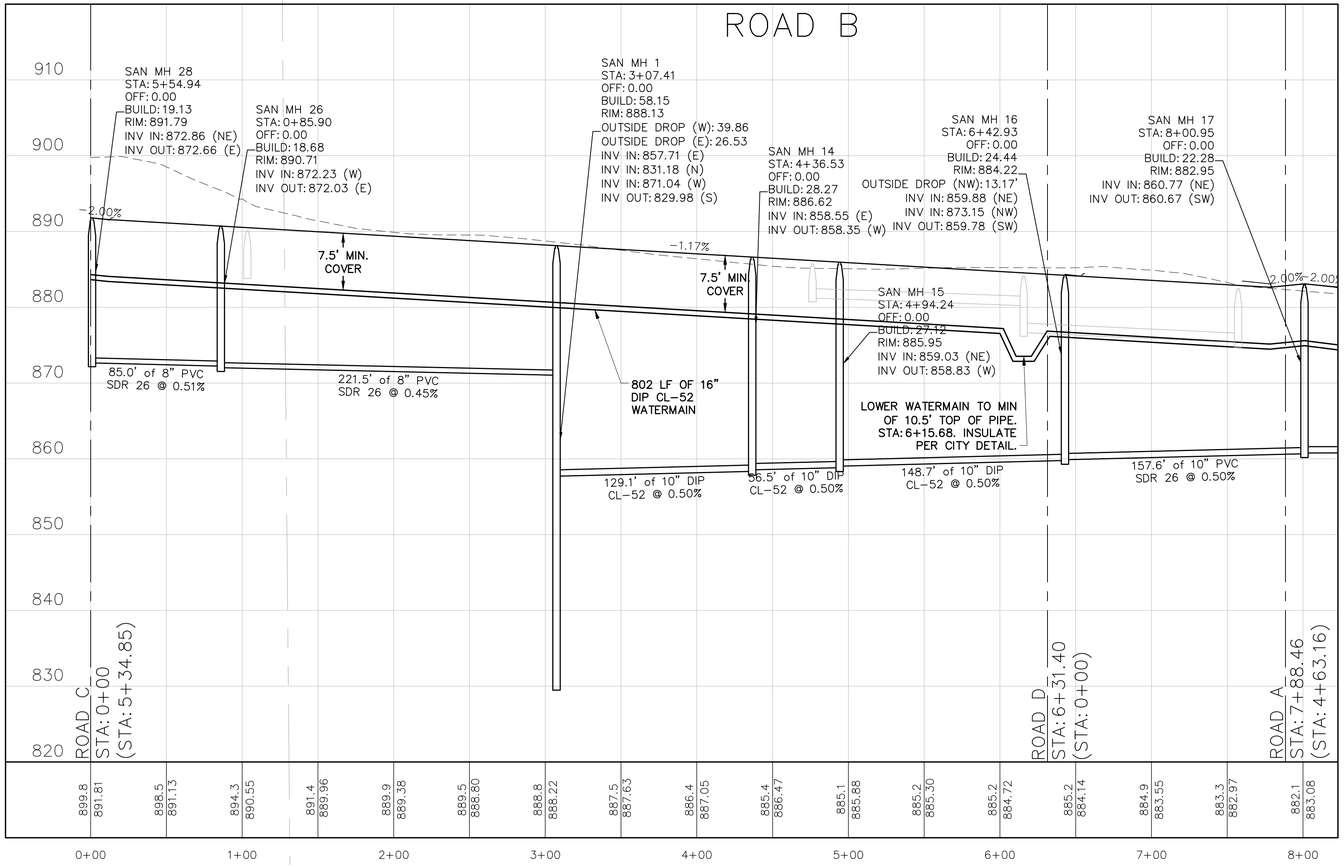

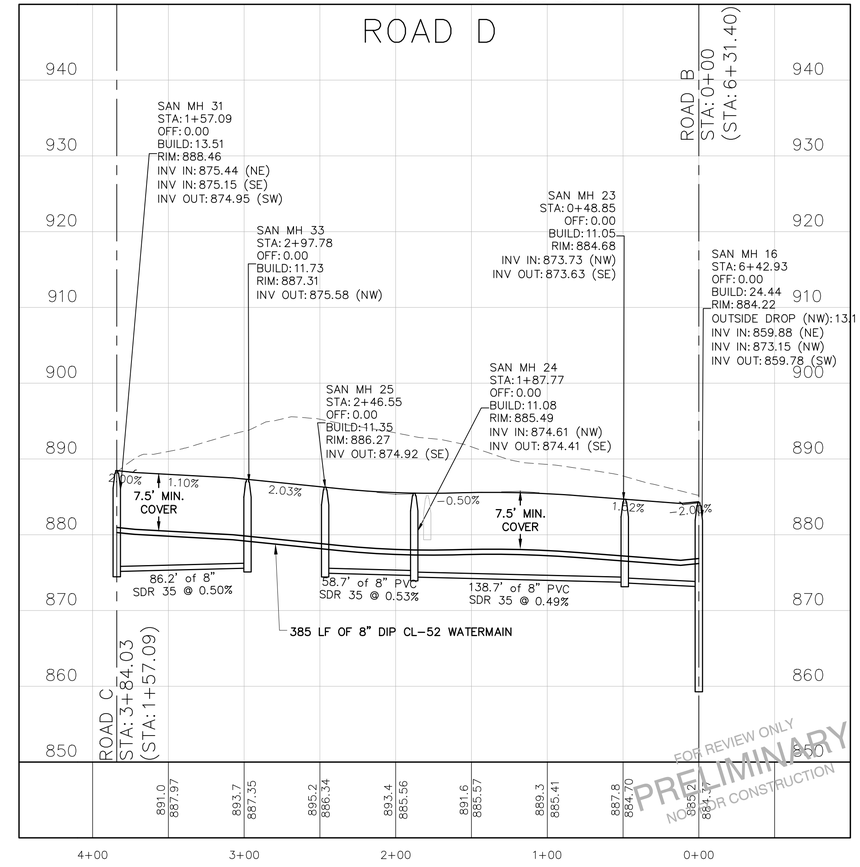

FOR REVIEW ONLY
PRELIMINARY
NOT FOR CONSTRUCTION

ALLIANT
733 Marquette Avenue
Suite 700
Minneapolis, MN 55402
612.758.3080
www.alliant-inc.com

CANVAS AT INVER GROVE HEIGHTS
INVER GROVE HEIGHTS, MINNESOTA

FINAL PLAT - PHASE 1

SANITARY SEWER AND WATERMAIN PLAN AND PROFILES

I hereby certify that this plan, specification, or report was prepared by me or under my direct supervision and that I am a duly Licensed PROFESSIONAL ENGINEER under the laws of the State of MINNESOTA

MARK RAUSCH, PE

Date License No.

QUALITY ASSURANCE/CONTROL

BY DATE

DATE	ISSUE
11-16-2020	FINAL PLAT-PH1 SUBMITTAL

PROJECT TEAM DATA

DESIGNED: MPR
DRAWN: SIL, TAS
PROJECT NO: 220-0092

Drawing name: G:\pw_working\projectwise\murregionld\dms24793\200092prof - v2.dwg Nov 16, 2020 - 3:34pm

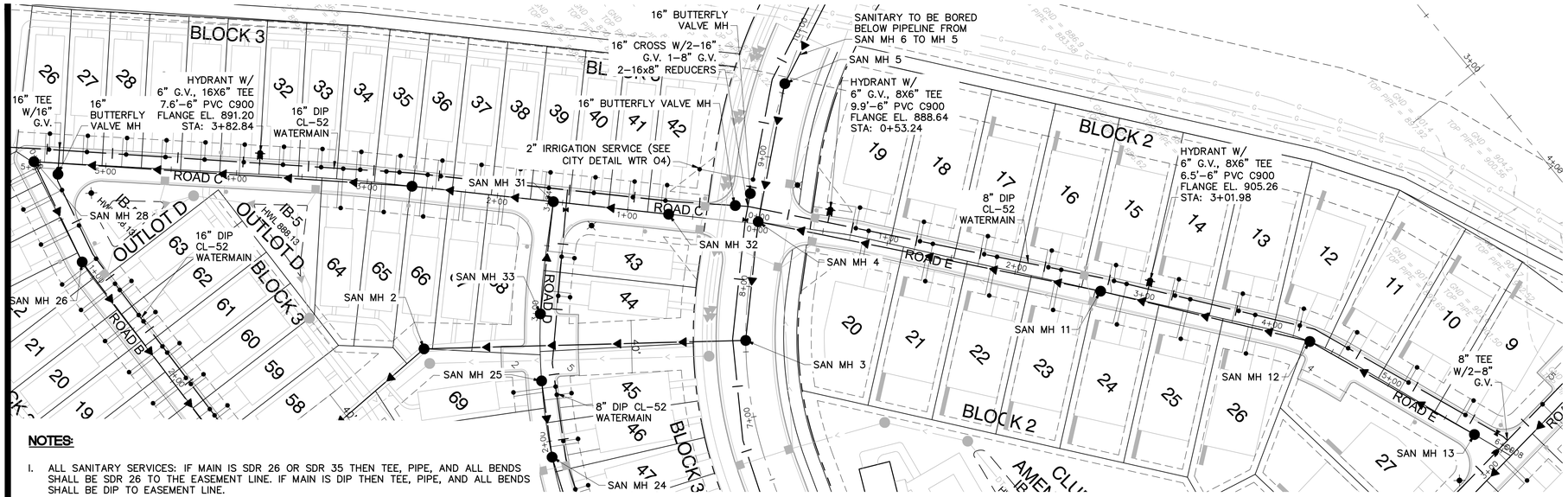

NOTES:

1. ALL SANITARY SERVICES: IF MAIN IS SDR 26 OR SDR 35 THEN TEE, PIPE, AND ALL BENDS SHALL BE SDR 26 TO THE EASEMENT LINE. IF MAIN IS DIP THEN TEE, PIPE, AND ALL BENDS SHALL BE DIP TO EASEMENT LINE.
2. ALL SANITARY SERVICSES SHALL BE @ 2.0% MIN. SLOPE.
3. ALL SANITARY MANHOLES SHALL BE 48" IN DIAMETER AND HAVE NEENAH R-1642 CASTINGS UNLESS NOTED OTHERWISE ON THE PLAN.
4. ALL WATER SERVICES SHALL BE 1" "TYPE K" COPPER.
5. ALL DIP WATERMAIN, INCLUDING VALVES, FITTINGS AND APPURTENANCES, SHALL BE FULLY ENCASED IN POLYETHYLENE FILM MEETING SPEC 2611.3A5.

FOR REVIEW ONLY
PRELIMINARY
NOT FOR CONSTRUCTION

0 25 50 100
SCALE IN FEET

N

LEGEND:

S = SANITARY SERVICE WYE STATION (FROM DOWNSTREAM MH)
IE = SANITARY SERVICE INVERT ELEVATION
CBE = CURB BOX ELEVATION
R = RISER LENGTH (ACTUAL LENGTH, NOT VERT. RISE (VERTICAL HEIGHT = R x 0.707)

BLOCK	LOT	S	IE	CBE	R
2	9	128	903.60	924.90	0
2	10	78	903.60	922.80	2
2	11	25	903.60	918.70	2
2	12	151	891.84	915.50	0
2	13	103	891.84	911.80	0
2	14	53	891.84	907.90	0
2	15	8	891.84	904.10	0
2	16	221	874.10	900.20	3
2	17	171	874.10	896.30	2
2	18	121	874.10	892.40	0
2	19	71	874.10	889.40	0
2	20	81	874.10	890.20	0
2	21	131	874.10	893.20	0
2	22	181	874.10	897.10	2
2	23	231	874.10	901.00	4
2	24	15	891.84	904.90	0
2	25	65	891.84	908.80	0
2	26	116	891.84	912.90	0
3	26	8	872.86	893.20	12
3	27	37	872.86	892.70	11
3	28	67	872.86	892.50	11
3	29	97	872.86	892.30	10
3	30	127	872.86	892.00	9
3	31	157	872.86	891.80	9
3	32	187	872.86	891.50	8
3	33	216	872.86	891.00	7
3	34	246	872.86	890.50	6
3	35	276	872.86	890.30	6
3	36	18	874.41	890.00	5
3	37	48	874.41	889.70	4
3	38	78	874.41	889.50	4
3	39	101	874.41	889.30	3
3	40	27	875.44	889.00	2
3	41	57	875.44	888.80	2
3	64	233	872.86	890.50	7
3	65	266	872.86	890.20	6
3	66	8	874.41	889.90	5
3	67	38	874.41	889.60	4
3	68	68	874.41	893.30	9

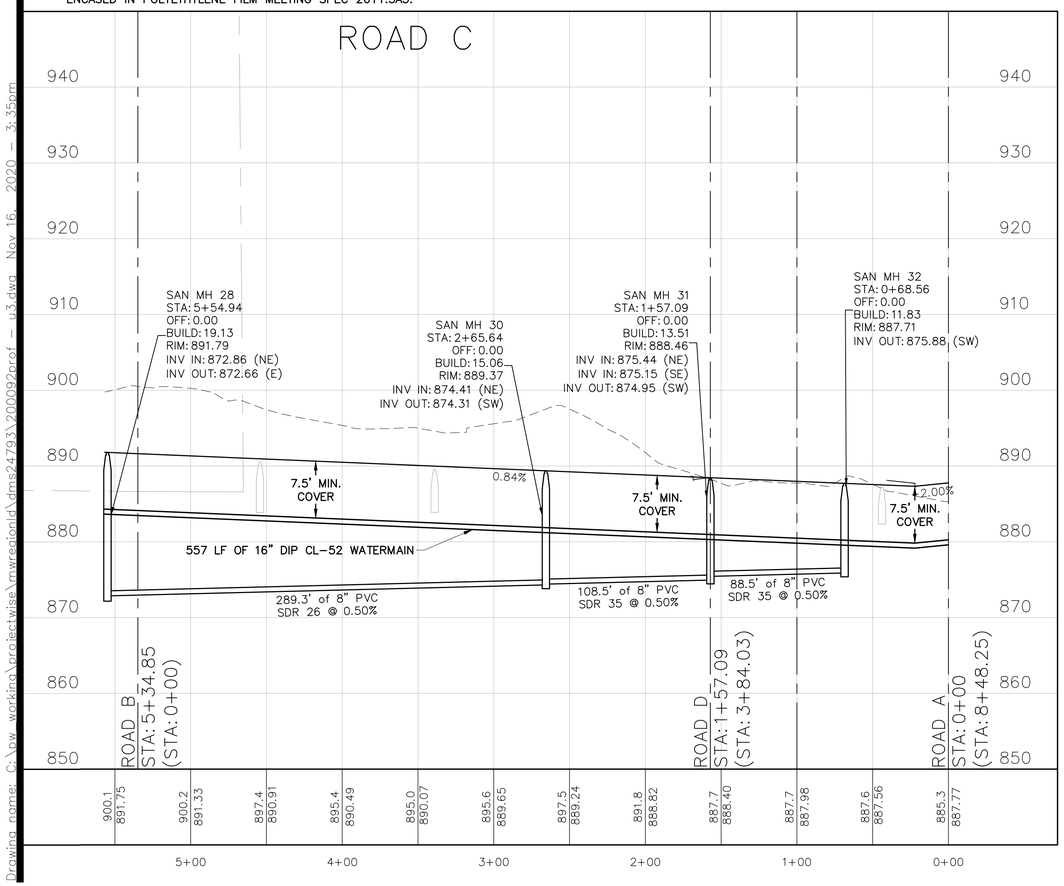

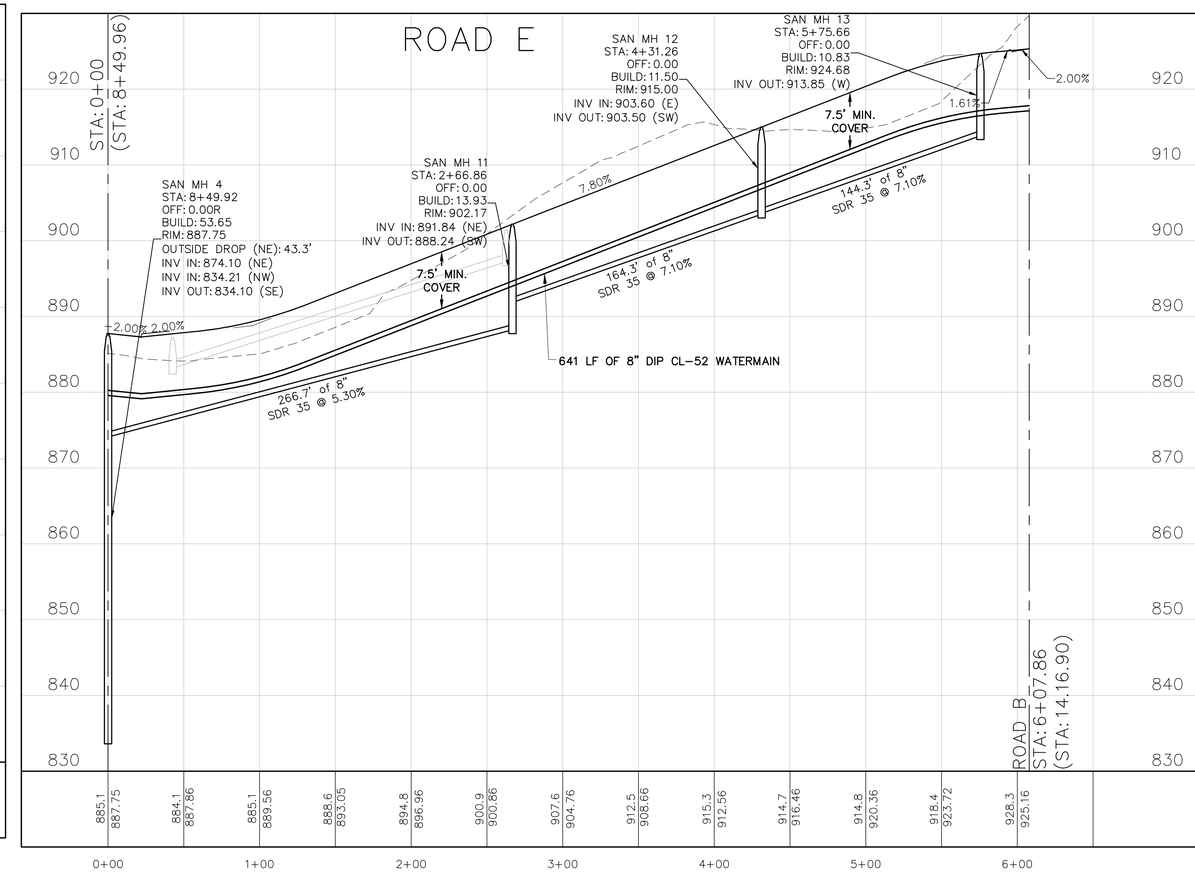

ALLIANT
733 Marquette Avenue
Suite 700
Minneapolis, MN 55402
612.758.3080
www.alliant-inc.com

CANVAS AT INVER GROVE HEIGHTS
INVER GROVE HEIGHTS, MINNESOTA
FINAL PLAT - PHASE 1
SANITARY SEWER AND WATERMAIN PLAN AND PROFILES

I hereby certify that this plan, specification, or report was prepared by me or under my direct supervision and that I am a duly Licensed PROFESSIONAL ENGINEER under the laws of the State of MINNESOTA

MARK RAUSCH, PE

Date License No.

QUALITY ASSURANCE/CONTROL

BY	DATE

DATE	ISSUE
11-16-2020	FINAL PLAT-PH1 SUBMITTAL

PROJECT TEAM DATA

DESIGNED: MPR
DRAWN: SIL, TAS
PROJECT NO: 220-0092

22

Drawing name: G:\ow working\projectwise\mwregional\dms24793\200092prof - 03.dwg Nov 16, 2020 - 3:35pm

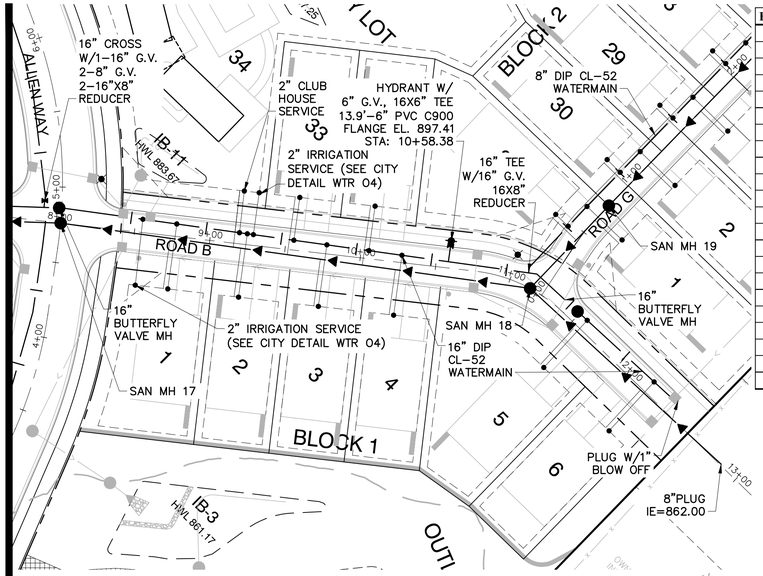

BLOCK	LOT	S	IE	CBE	R
1	1	73	860.77	885.30	17
1	2	120	860.77	888.16	21
1	3	173	860.77	892.30	26
1	4	223	860.77	896.20	32
1	5	39	861.14	905.20	40
1	6	99	861.14	905.70	40
2	1	62	891.36	906.50	0
2	2	37	894.57	910.50	3
2	3	87	894.57	914.50	4
2	4	137	894.57	918.50	5
2	5	187	894.57	922.50	7
2	6	237	894.57	926.00	8
2	7	287	894.57	927.40	5
2	8	345	894.57	927.50	0
2	27	170	894.57	921.00	6
2	28	118	894.57	917.00	5
2	29	68	894.57	913.00	3
2	30	18	894.57	909.00	2
2	31	44	891.36	904.90	0
2	32	201	860.77	894.60	29
2	33	151	860.77	890.90	24
2	34	115	860.77	885.00	16

LEGEND:

S = SANITARY SERVICE WYE STATION (FROM DOWNSTREAM MH)
IE = SANITARY SERVICE INVERT ELEVATION
CBE = CURB BOX ELEVATION
R = RISER LENGTH (ACTUAL LENGTH, NOT VERT. RISE
(VERTICAL HEIGHT = R x 0.707)

ROAD G WATERMAIN LOOP EXTENSION

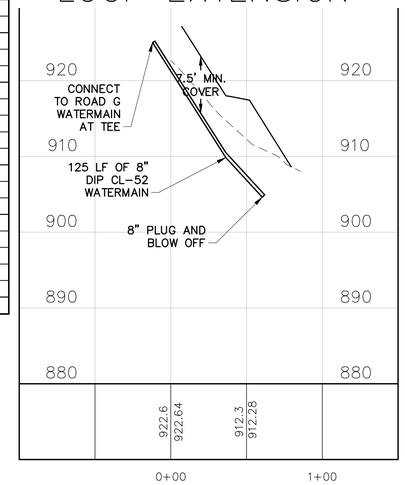

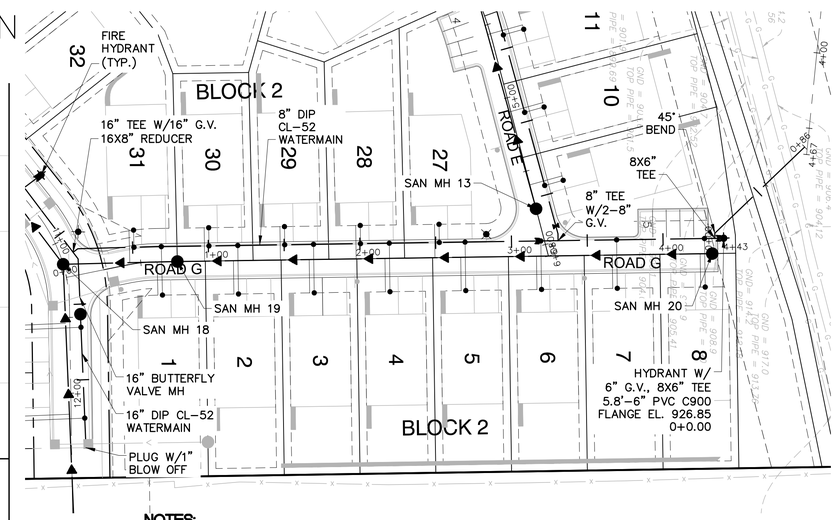

NOTES:

1. ALL SANITARY SERVICES: IF MAIN IS SDR 26 OR SDR 35 THEN TEE, PIPE, AND ALL BENDS SHALL BE SDR 26 TO THE EASEMENT LINE. IF MAIN IS DIP THEN TEE, PIPE, AND ALL BENDS SHALL BE DIP TO EASEMENT LINE.
2. ALL SANITARY SERVICSES SHALL BE @ 2.0% MIN. SLOPE.
3. ALL SANITARY MANHOLES SHALL BE 48" IN DIAMETER AND HAVE NEENAH R-1642 CASTINGS UNLESS NOTED OTHERWISE ON THE PLAN.
4. ALL WATER SERVICES SHALL BE 1" "TYPE K" COPPER.
5. ALL DIP WATERMAIN, INCLUDING VALVES, FITTINGS AND APPURTENANCES, SHALL BE FULLY ENCASED IN POLYETHYLENE FILM MEETING SPEC 2611.3A5.

ROAD B

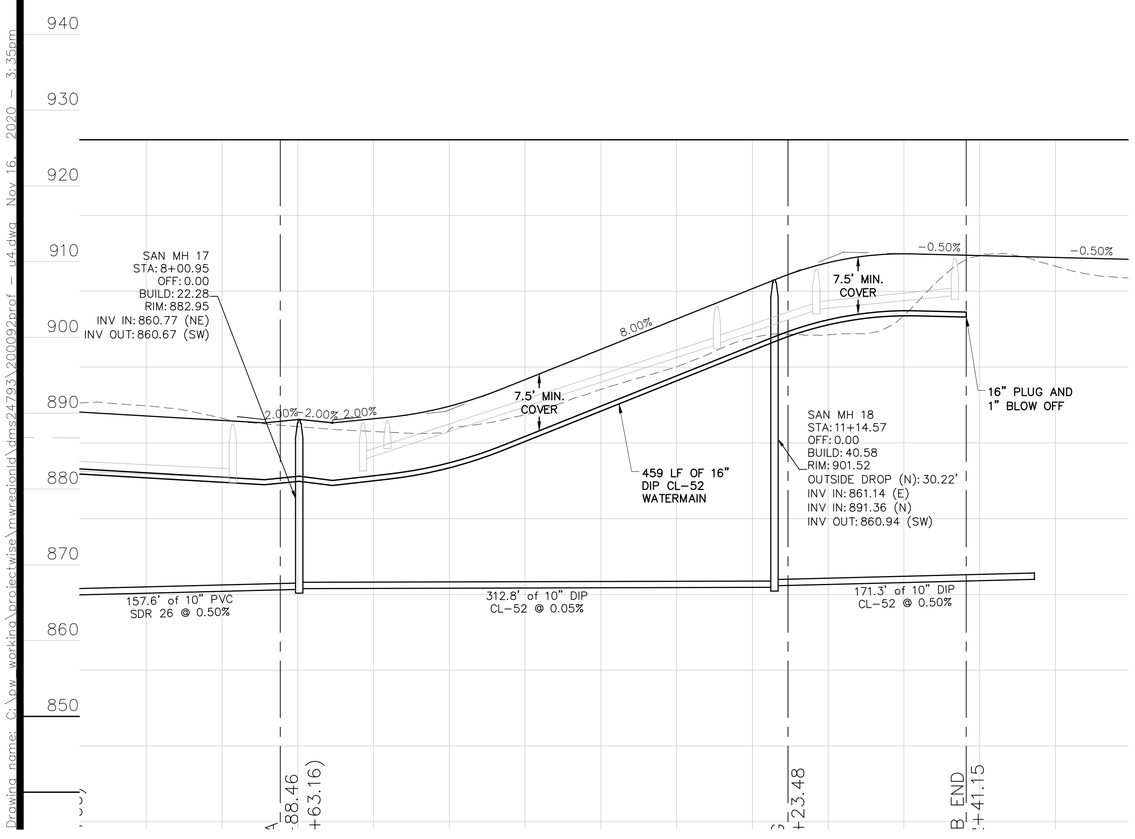

ROAD G

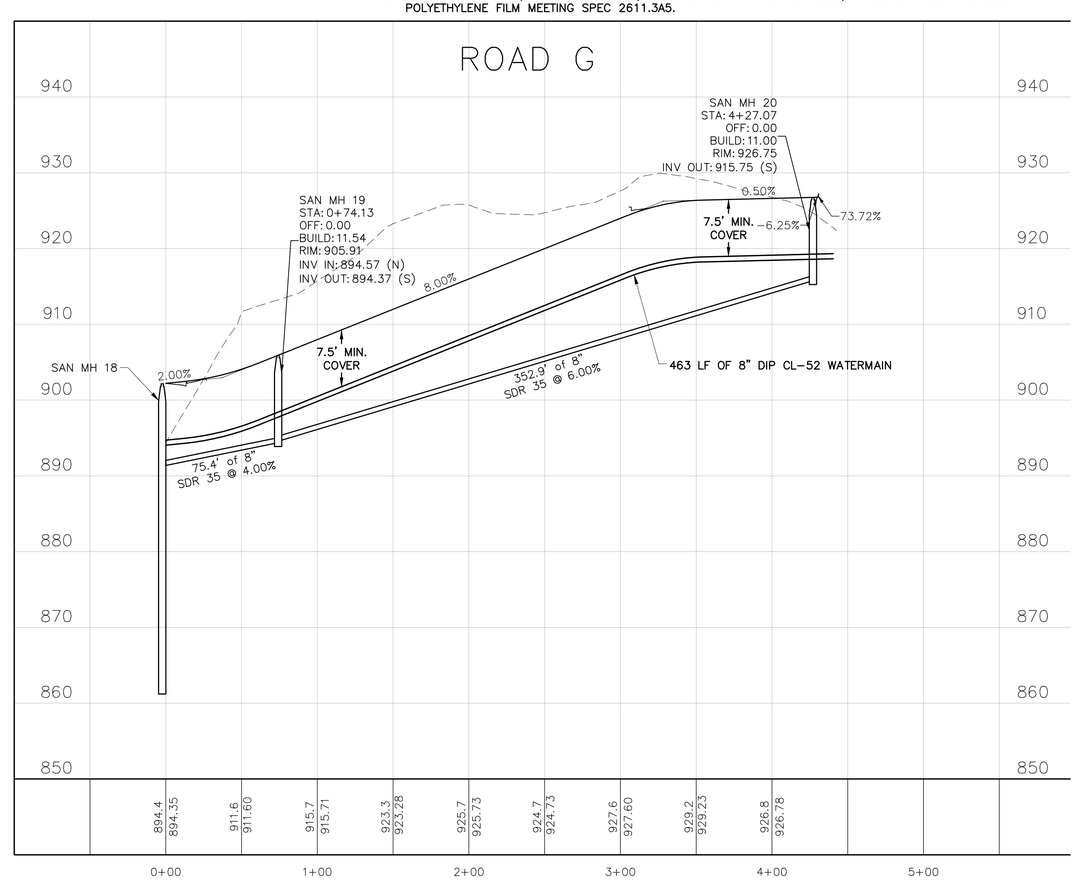

ALLIANT
733 Marquette Avenue
Suite 700
Minneapolis, MN 55402
612.758.3080
www.alliant-inc.com

CANVAS AT INVER GROVE HEIGHTS
INVER GROVE HEIGHTS, MINNESOTA
FINAL PLAT - PHASE 1
SANITARY SEWER AND WATERMAIN PLAN AND PROFILES

I hereby certify that this plan, specification, or report was prepared by me or under my direct supervision and that I am a duly Licensed PROFESSIONAL ENGINEER under the laws of the State of MINNESOTA

MARK RAUSCH, PE

Date License No.

QUALITY ASSURANCE/CONTROL

BY DATE

DATE	ISSUE
11-16-2020	FINAL PLAT-PH1 SUBMITTAL

PROJECT TEAM DATA

DESIGNED: MPR
DRAWN: SIL, TAS
PROJECT NO: 220-0092

Drawing name: G:\pw_working\projectwise\mwregional\dms247931\200092prof - u4.dwg Nov 16, 2020 - 3:35pm

UTILITY NOTES:

1. EXISTING UTILITIES, SERVICE LOCATIONS AND ELEVATIONS SHALL BE VERIFIED IN FIELD PRIOR TO CONSTRUCTION.
2. MAINTAIN A MIN 18" VERTICAL SEPARATION AT ALL PIPE CROSSINGS. WATER AND SANITARY SEWER LINES TO MAINTAIN 10' HORIZONTAL SEPARATION. LOWER WATERMAIN AS NECESSARY.
3. CONTRACTOR IS RESPONSIBLE FOR ALL PERMITS PRIOR TO THE START OF CONSTRUCTION.
4. PROVIDE POLYSTYRENE INSULATION FOR ALL STORM SEWER AND WATERMAIN CROSSINGS WHERE VERTICAL OR HORIZONTAL SEPARATION IS LESS THAN 3'.
5. ALL UTILITY WORK WITHIN THE R.O.W. SHALL COMPLY WITH THE CITY OF INVER GROVE HEIGHTS ENGINEERING GUIDELINES.
6. NOTIFY GOPHER STATE ONE CALL 48 HOURS IN ADVANCE OF ANY UTILITY WORK.
7. PROVIDE TEMPORARY TRAFFIC CONTROL IN COMPLIANCE WITH MNDOT "TEMPORARY TRAFFIC CONTROL ZONE LAYOUTS–FIELD MANUAL" LATEST REVISION, FOR ANY CONSTRUCTION WITHIN PUBLIC R.O.W.

LEGEND:

EXISTING GATE VALVE	PROPOSED CATCH BASIN
EXISTING HYDRANT	PROPOSED WATERMAIN
EXISTING WATERMAIN	PROPOSED SANITARY MANHOLE
EXISTING CATCH BASIN	PROPOSED GATE VALVE
EXISTING STORM MANHOLE	PROPOSED HYDRANT
EXISTING STORM SEWER	4" PERFORATED DRAINTILE
EXISTING SANITARY MANHOLE	PROPOSED STORM SEWER
EXISTING SANITARY SEWER	PROPOSED SANITARY SEWER

FOR REVIEW ONLY
PRELIMINARY
NOT FOR CONSTRUCTION

N

0 40 80 160
SCALE IN FEET

ALLIANT
733 Marquette Avenue
Suite 700
Minneapolis, MN 55402
612.758.3080
www.alliant-inc.com

CANVAS AT INVER GROVE HEIGHTS
INVER GROVE HEIGHTS, MINNESOTA
FINAL PLAT - PHASE 1
STORM SEWER PLAN

I hereby certify that this plan, specification, or report was prepared by me or under my direct supervision and that I am a duly Licensed PROFESSIONAL ENGINEER under the laws of the State of MINNESOTA

MARK RAUSCH, PE

Date License No.

QUALITY ASSURANCE/CONTROL

BY	DATE

DATE	ISSUE
11-16-2020	FINAL PLAT-PH1 SUBMITTAL

PROJECT TEAM DATA

DESIGNED:	MPR
DRAWN:	SIL, TAS
PROJECT NO:	220-0092

24

SHEET 24 OF 39

Drawing name: G:\ew_working\projectwise\mwregion1\dms24793\200092strm.dwg Nov 16, 2020 – 3:36pm

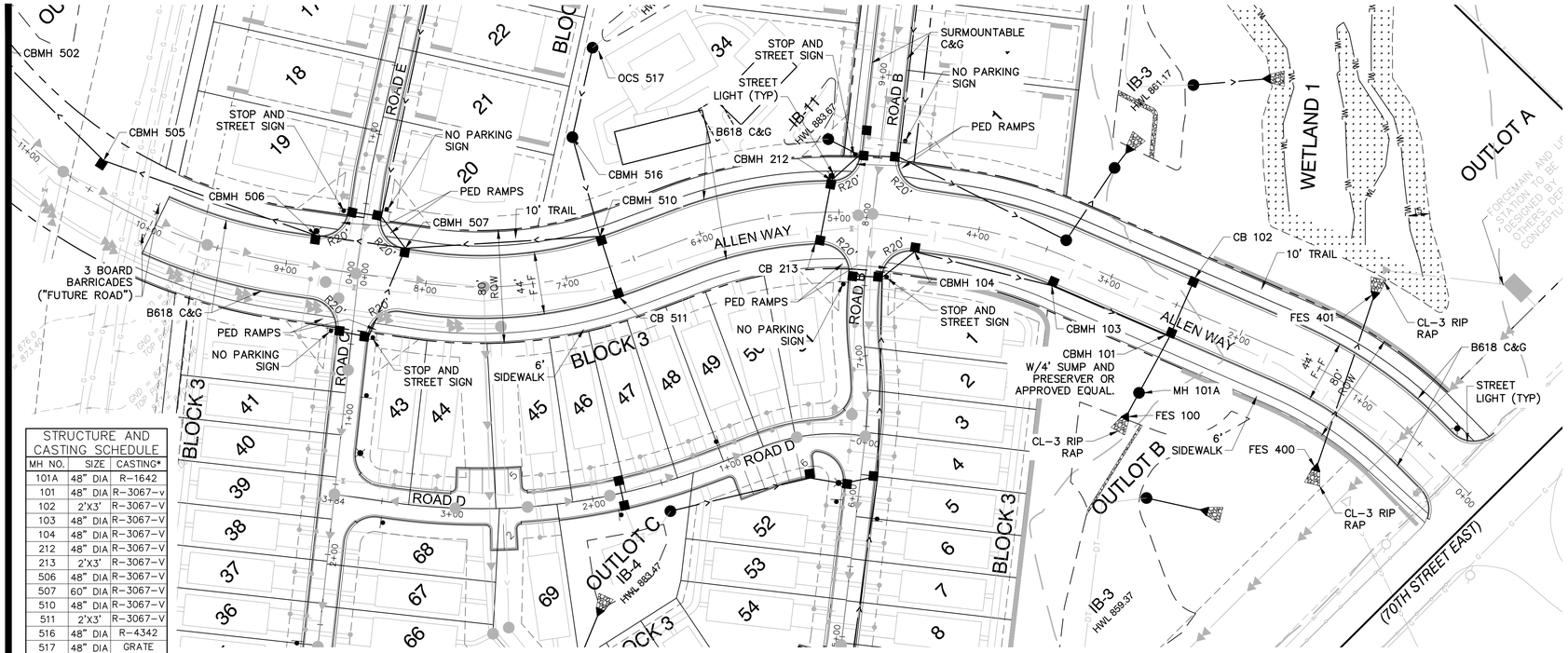

STRUCTURE AND CASTING SCHEDULE		
MH NO.	SIZE	CASTING*
101A	48" DIA	R-1642
101	48" DIA	R-3067-v
102	2'X3'	R-3067-V
103	48" DIA	R-3067-V
104	48" DIA	R-3067-V
212	48" DIA	R-3067-V
213	2'X3'	R-3067-V
506	48" DIA	R-3067-V
507	60" DIA	R-3067-V
510	48" DIA	R-3067-V
511	2'X3'	R-3067-V
516	48" DIA	R-4342
517	48" DIA	GRATE

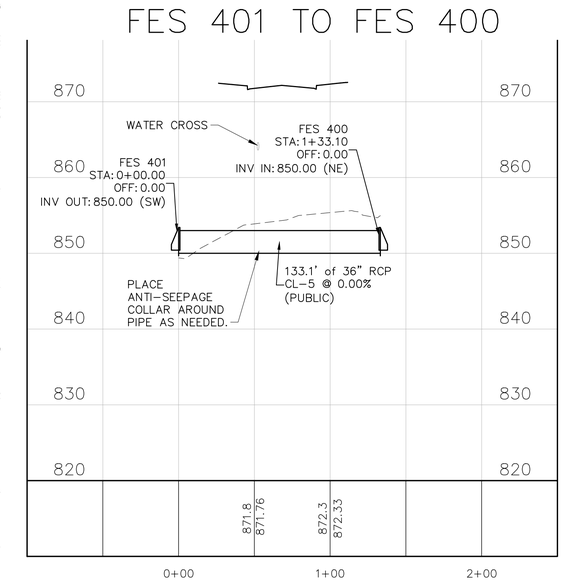

NOTES:

1. ALL PUBLIC INTERSECTION CURB RETURNS SHALL BE B618, EXCEPT IF NOTED.
2. ALL PRIVATE INTERSECTION CURB RETURNS SHALL BE B618, EXCEPT IF NOTED.
3. ALSO SEE SITE SIGNAGE AND LIGHTING PLAN FOR SIGN AND LIGHTING LOCATIONS.

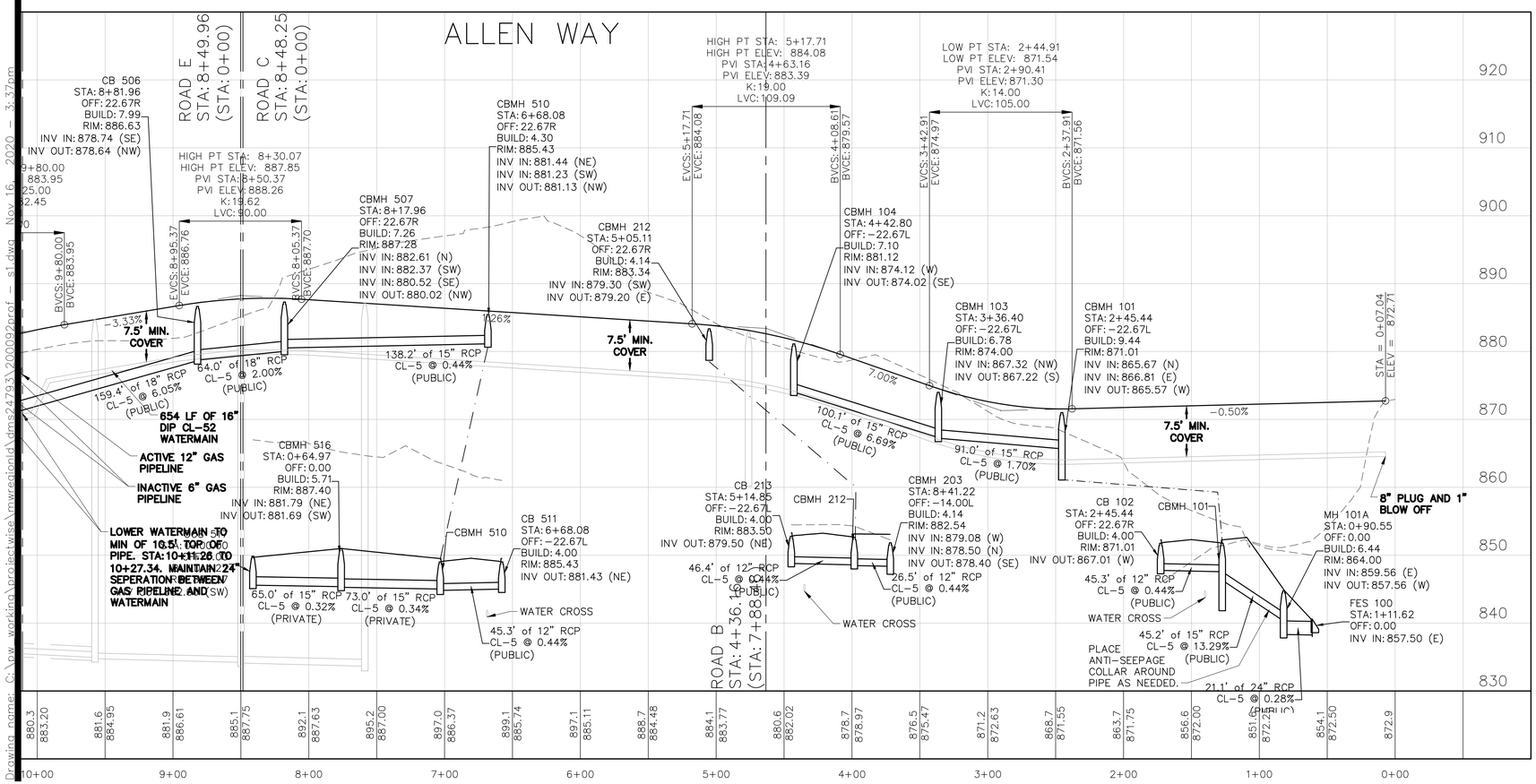

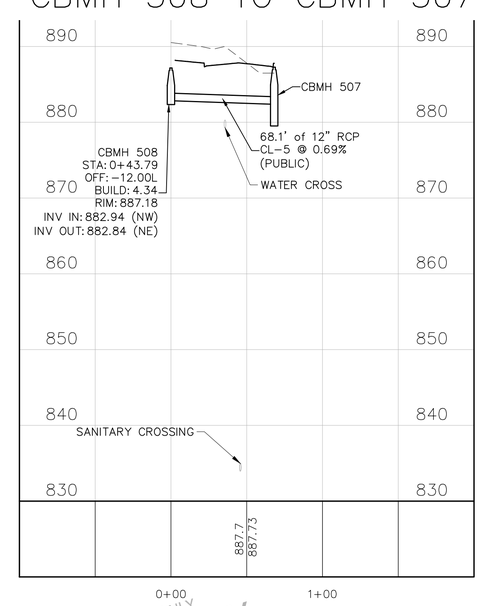

FOR REVIEW ONLY
PRELIMINARY
NOT FOR CONSTRUCTION

0 25 50 100
SCALE IN FEET

ALLIANT
733 Marquette Avenue
Suite 700
Minneapolis, MN 55402
612.758.3080
www.alliant-inc.com

CANVAS AT INVER GROVE HEIGHTS

INVER GROVE HEIGHTS, MINNESOTA

FINAL PLAT - PHASE 1

STREET AND STORM SEWER PLAN AND PROFILES

I hereby certify that this plan, specification, or report was prepared by me or under my direct supervision and that I am a duly Licensed PROFESSIONAL ENGINEER under the laws of the State of MINNESOTA

MARK RAUSCH, PE

Date License No.

QUALITY ASSURANCE/CONTROL

BY	DATE

DATE	ISSUE
11-16-2020	FINAL PLAT-PH1 SUBMITTAL

PROJECT TEAM DATA

DESIGNED: MPR
DRAWN: SIL, TAS
PROJECT NO: 220-0092

Drawing name: G:\pw_working\projectwise\mwregional\dms24793\200092prof - s1.dwg Nov 16, 2020 - 3:37pm

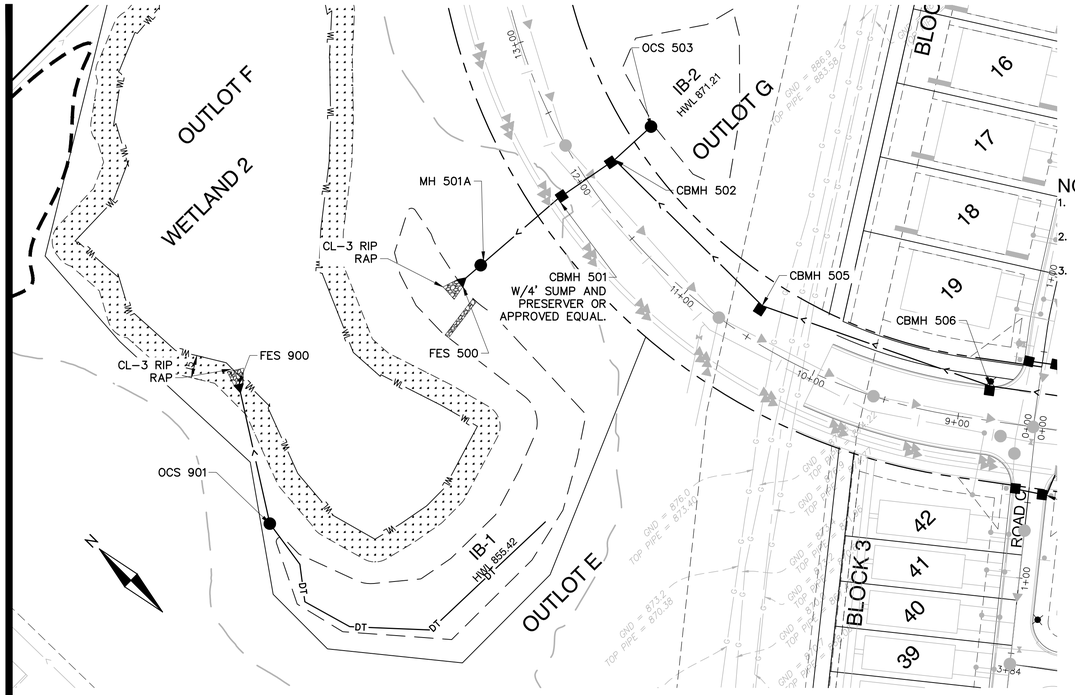

N

NOTES:

1. ALL PUBLIC INTERSECTION CURB RETURNS SHALL BE B618, EXCEPT IF NOTED.
2. ALL PRIVATE INTERSECTION CURB RETURNS SHALL BE B618, EXCEPT IF NOTED.
3. ALSO SEE SITE SIGNAGE AND LIGHTING PLAN FOR SIGN AND LIGHTING LOCATIONS.

0 25 50 100
SCALE IN FEET

FOR REVIEW ONLY
PRELIMINARY
NOT FOR CONSTRUCTION

STRUCTURE AND CASTING SCHEDULE		
MH NO.	SIZE	CASTING*
501A	48" DIA	R-1642
501	48" DIA	R-3067-V
502	48" DIA	R-3067-V
503	48" DIA	GRATE
505	48" DIA	R-3067-V
901	48" DIA	GRATE

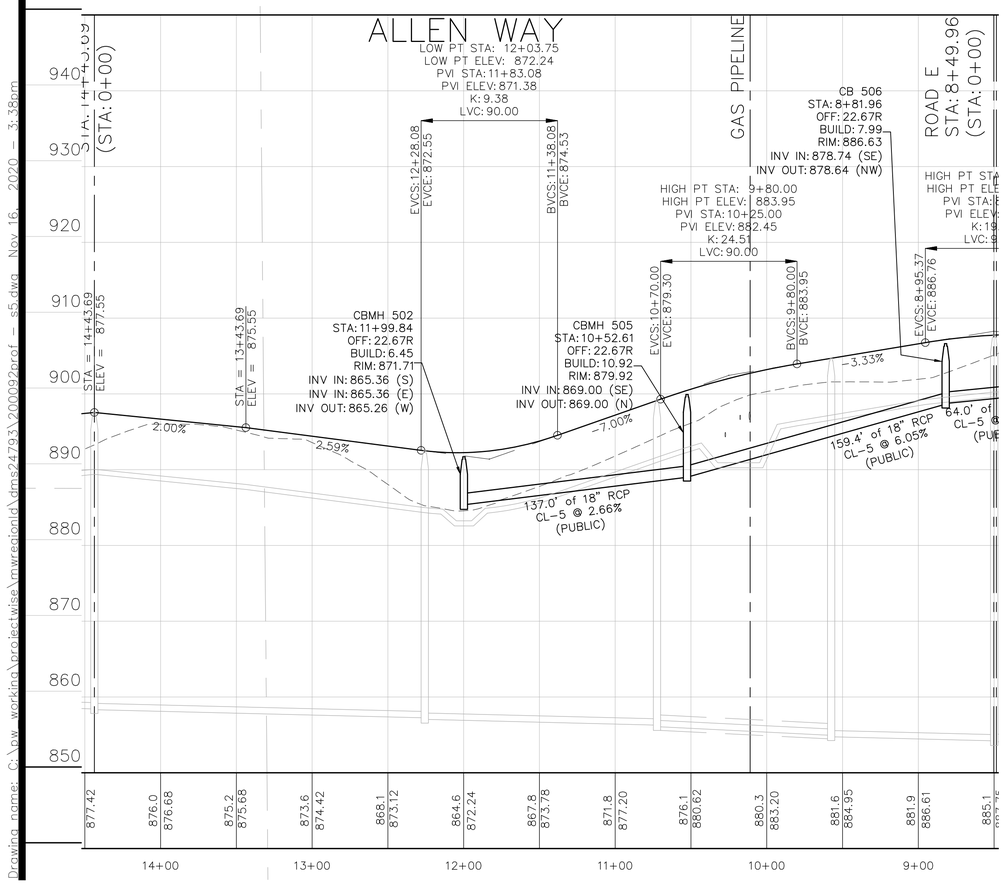

OCS 503 TO FES 500

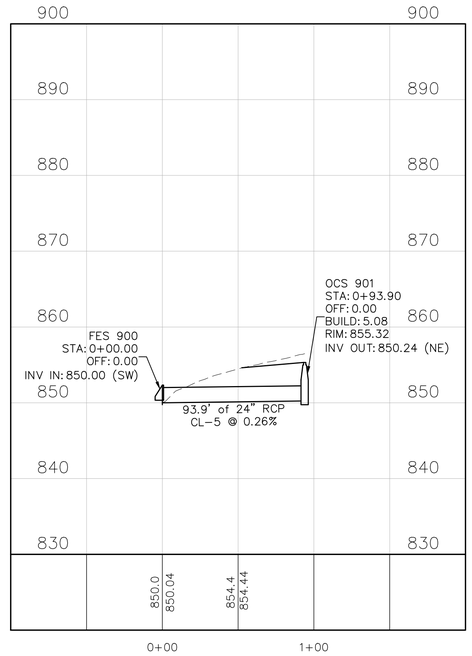

OCS 503 TO FES 500

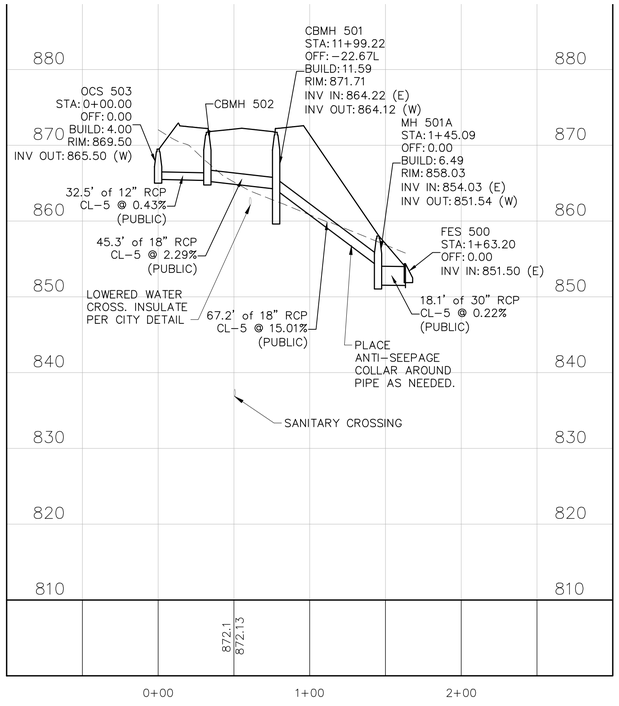

ALLIANT
733 Marquette Avenue
Suite 700
Minneapolis, MN 55402
612.758.3080
www.alliant-inc.com

CANVAS AT INVER GROVE HEIGHTS

INVER GROVE HEIGHTS, MINNESOTA

FINAL PLAT - PHASE 1

STREET AND STORM SEWER PLAN AND PROFILES

I hereby certify that this plan, specification, or report was prepared by me or under my direct supervision and that I am a duly Licensed PROFESSIONAL ENGINEER under the laws of the State of MINNESOTA

MARK RAUSCH, PE

Date License No.

QUALITY ASSURANCE/CONTROL

BY	DATE

DATE	ISSUE
11-16-2020	FINAL PLAT-PH1 SUBMITTAL

PROJECT TEAM DATA

DESIGNED:	MPR
DRAWN:	SIL, TAS
PROJECT NO:	220-0092

Drawing name: C:\pw_working\projectwise\mwrcegional\dms24793\200092prof - e5.dwg Nov 16, 2020 - 3:38pm

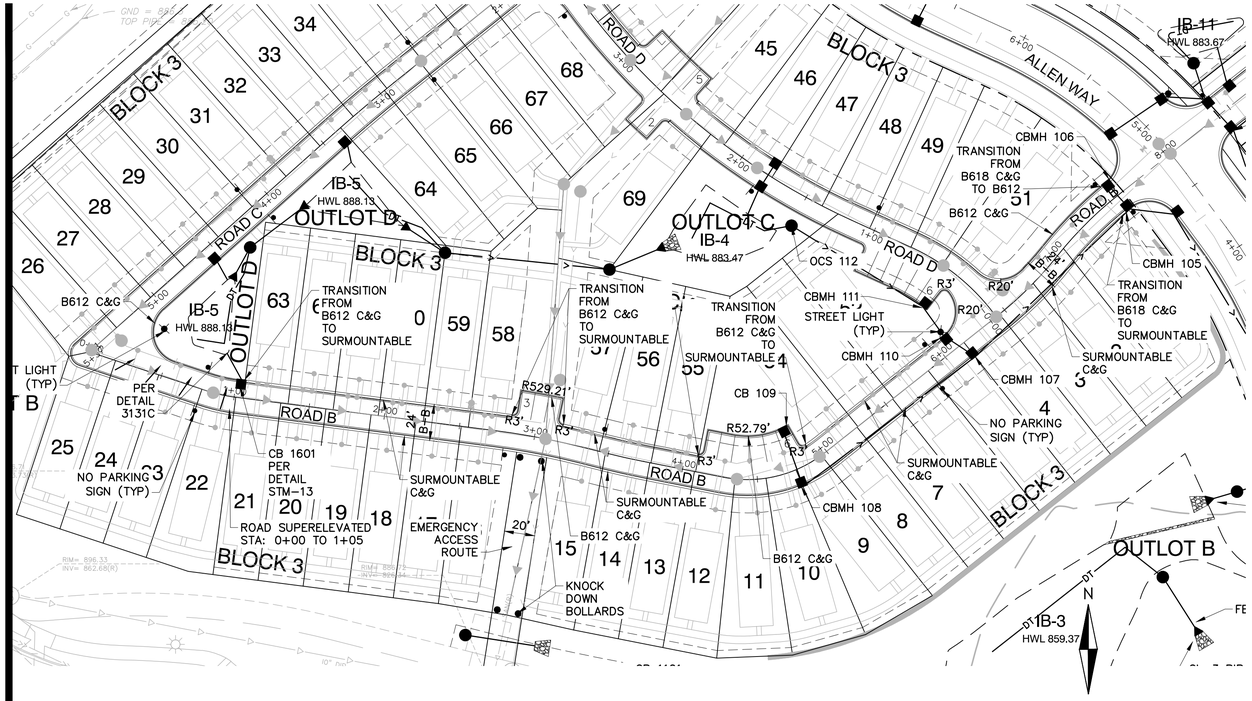

STRUCTURE AND CASTING SCHEDULE		
MH NO.	SIZE	CASTING*
105	60" DIA	R-3067-V
106	2'X3'	R-3067-v
107	48" DIA	R-3501-TR
108	48" DIA	R-3501-TR
109	2'X3'	R-3067-V
110	48" DIA	R-3067-V
111	48" DIA	R-3067-V
112	48" DIA	GRATE
1601	2'X3'	R-3067-V

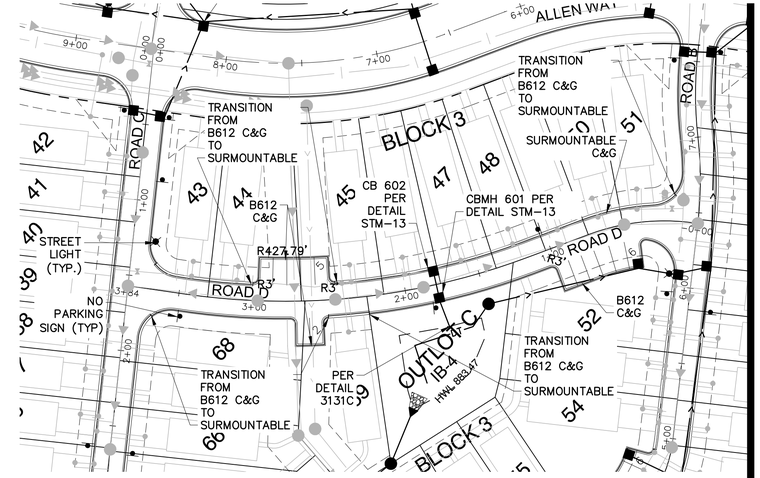

NOTES:

1. ALL PUBLIC INTERSECTION CURB RETURNS SHALL BE B618, EXCEPT IF NOTED.
2. ALL PRIVATE INTERSECTION CURB RETURNS SHALL BE B618, EXCEPT IF NOTED.
3. ALSO SEE SITE SIGNAGE AND LIGHTING PLAN FOR SIGN AND LIGHTING LOCATIONS.

FOR REVIEW ONLY
PRELIMINARY
NOT FOR CONSTRUCTION

0 25 50 100
SCALE IN FEET

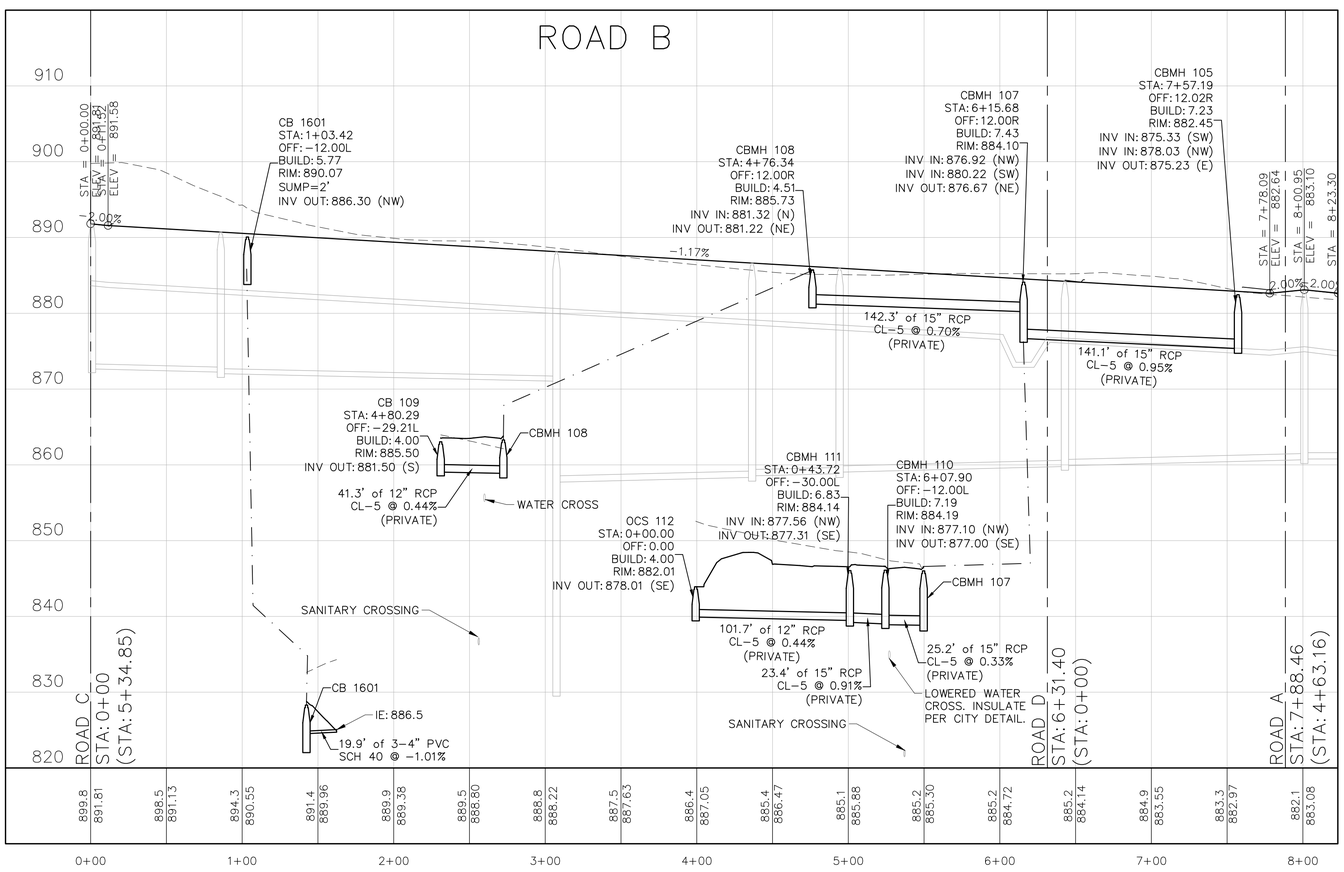

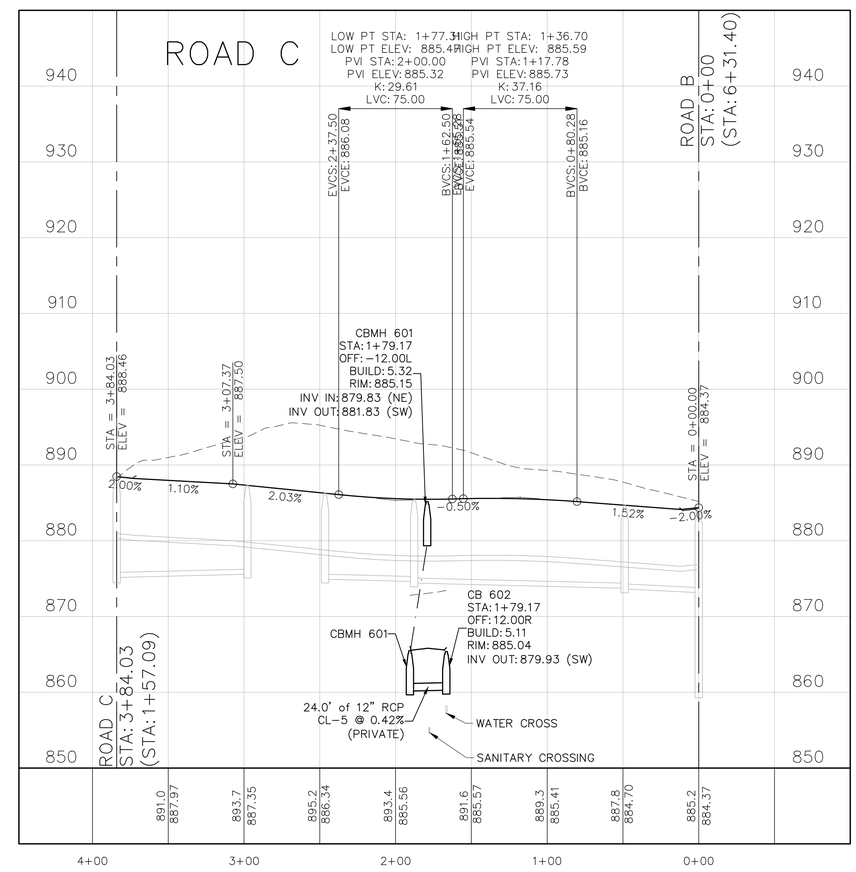

ALLIANT
733 Marquette Avenue
Suite 700
Minneapolis, MN 55402
612.758.3080
www.alliant-inc.com

CANVAS AT INVER GROVE HEIGHTS

INVER GROVE HEIGHTS, MINNESOTA

FINAL PLAT - PHASE 1

STREET AND STORM SEWER PLAN AND PROFILES

I hereby certify that this plan, specification, or report was prepared by me or under my direct supervision and that I am a duly Licensed PROFESSIONAL ENGINEER under the laws of the State of MINNESOTA

MARK RAUSCH, PE

Date License No.

QUALITY ASSURANCE/CONTROL

BY	DATE

DATE	ISSUE
11-16-2020	FINAL PLAT-PH1 SUBMITTAL

PROJECT TEAM DATA

DESIGNED:	MPR
DRAWN:	SIL, TAS
PROJECT NO:	220-0092

Drawing name: G:\pw_working\projectwise\mwregional\dms24793\200092prof - s2.dwg Nov 16, 2020 - 3:39pm

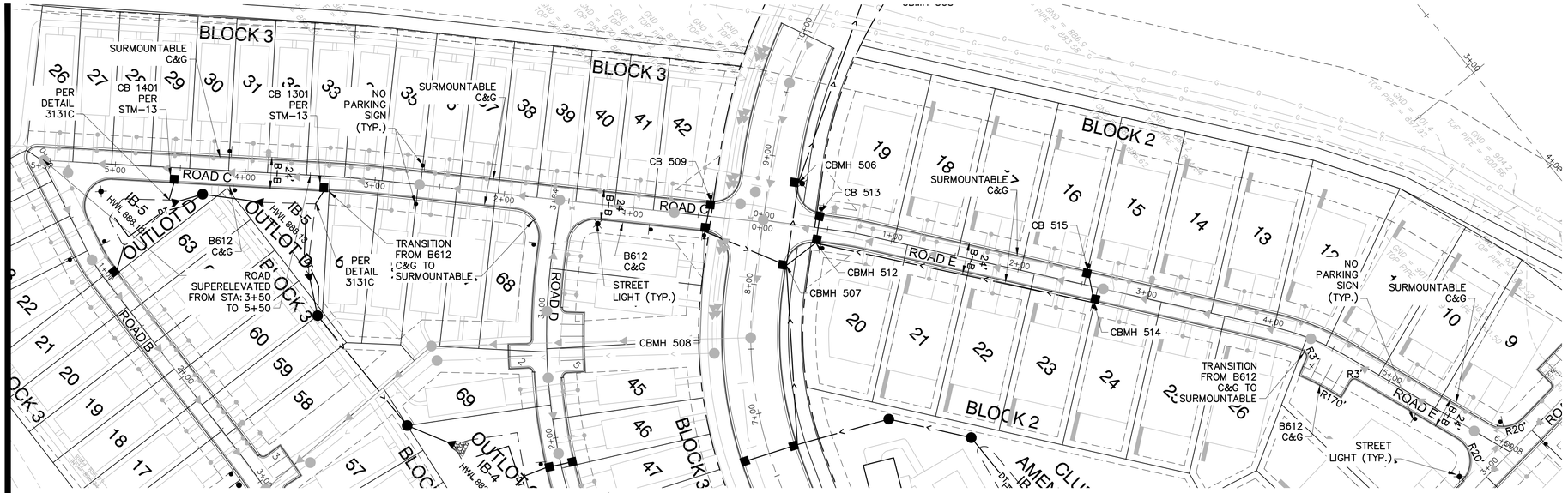

FOR REVIEW ONLY
PRELIMINARY
NOT FOR CONSTRUCTION

SCALE 0 25 50 100 IN FEET

N

NOTES:

1. ALL PUBLIC INTERSECTION CURB RETURNS SHALL BE B618, EXCEPT IF NOTED.
2. ALL PRIVATE INTERSECTION CURB RETURNS SHALL BE B618, EXCEPT IF NOTED.
3. ALSO SEE SITE SIGNAGE AND LIGHTING PLAN FOR SIGN AND LIGHTING LOCATIONS.

STRUCTURE AND CASTING SCHEDULE

MH NO.	SIZE	CASTING*
506	48" DIA	R-1642
507	60" DIA	R-3067-v
508	48" DIA	R-3067-V
509	48" DIA	R-3067-V
512	48" DIA	R-3067-V
513	2'X3'	R-3067-V
514	48" DIA	R-3501-TL
515	2'X3'	R-3501-TR
1301	2'X3'	R-3067-V
1401	2'X3'	R-3067-V

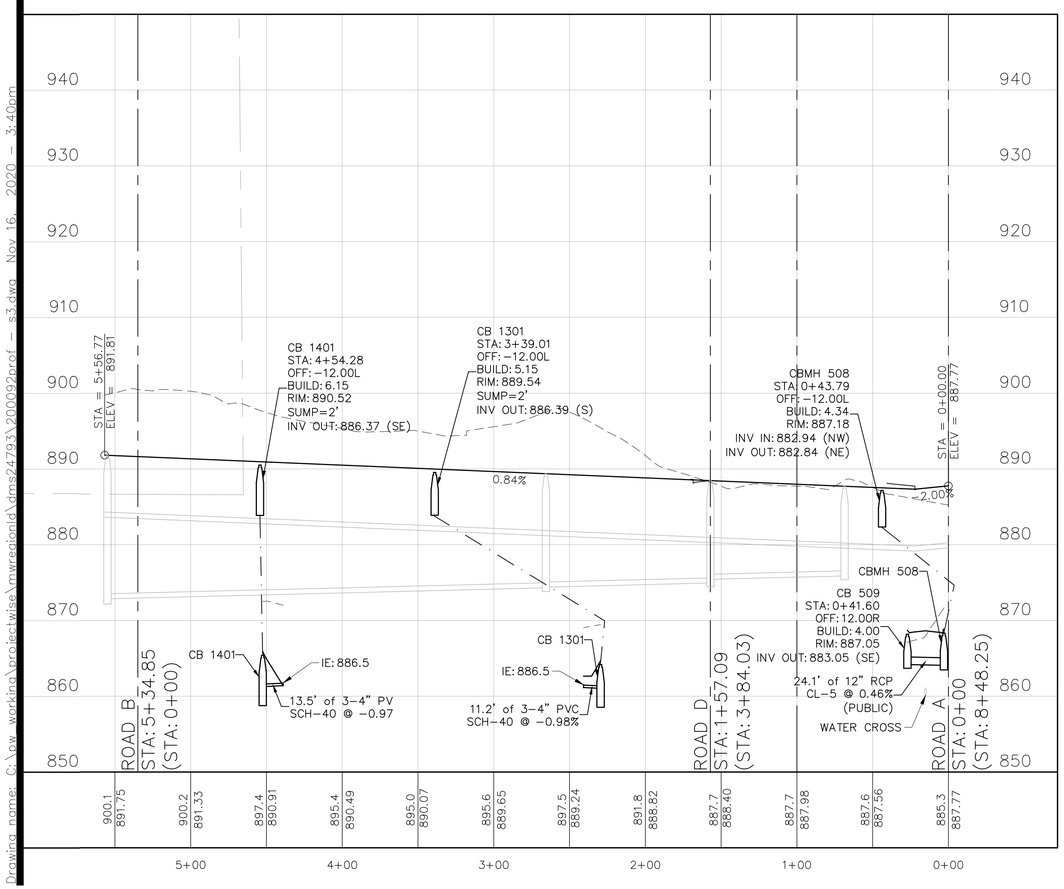

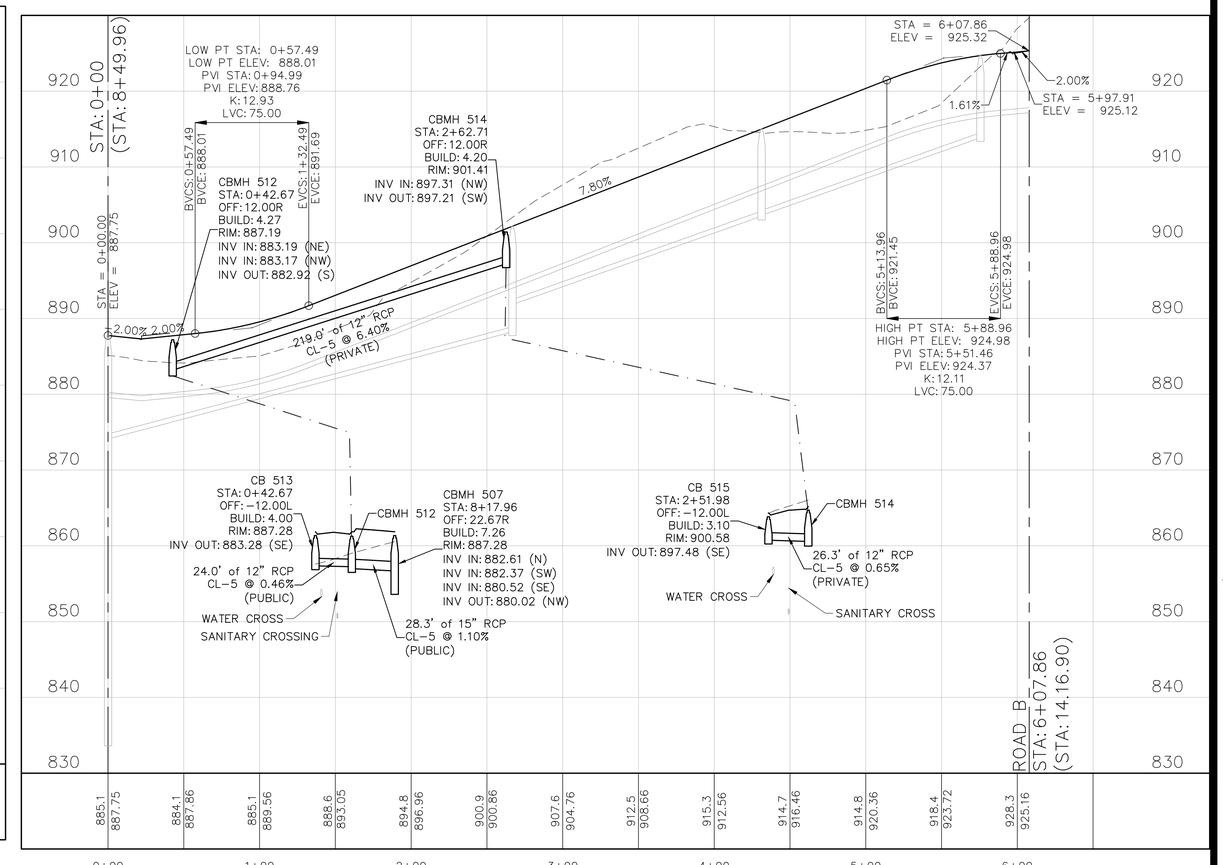

ALLIANT
733 Marquette Avenue
Suite 700
Minneapolis, MN 55402
612.758.3080
www.alliant-inc.com

CANVAS AT INVER GROVE HEIGHTS

INVER GROVE HEIGHTS, MINNESOTA

FINAL PLAT - PHASE 1

STREET AND STORM SEWER PLAN AND PROFILES

I hereby certify that this plan, specification, or report was prepared by me or under my direct supervision and that I am a duly Licensed PROFESSIONAL ENGINEER under the laws of the State of MINNESOTA

MARK RAUSCH, PE

Date License No.

QUALITY ASSURANCE/CONTROL

BY DATE

DATE	ISSUE
11-16-2020	FINAL PLAT-PH1 SUBMITTAL

PROJECT TEAM DATA

DESIGNED: MPR
DRAWN: SIL, TAS
PROJECT NO: 220-0092

28

SHEET 28 OF 39

Drawing name: G:\pw_working\projectwise\powregional\dms24793\200092prof - s3.dwg Nov 16, 2020 - 3:40pm

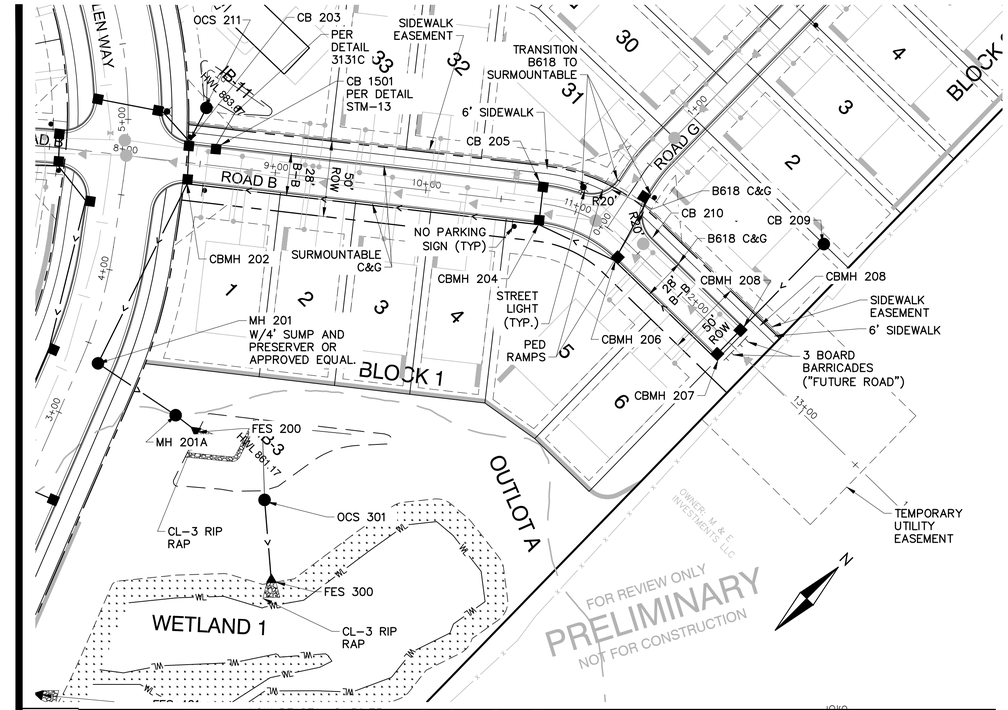

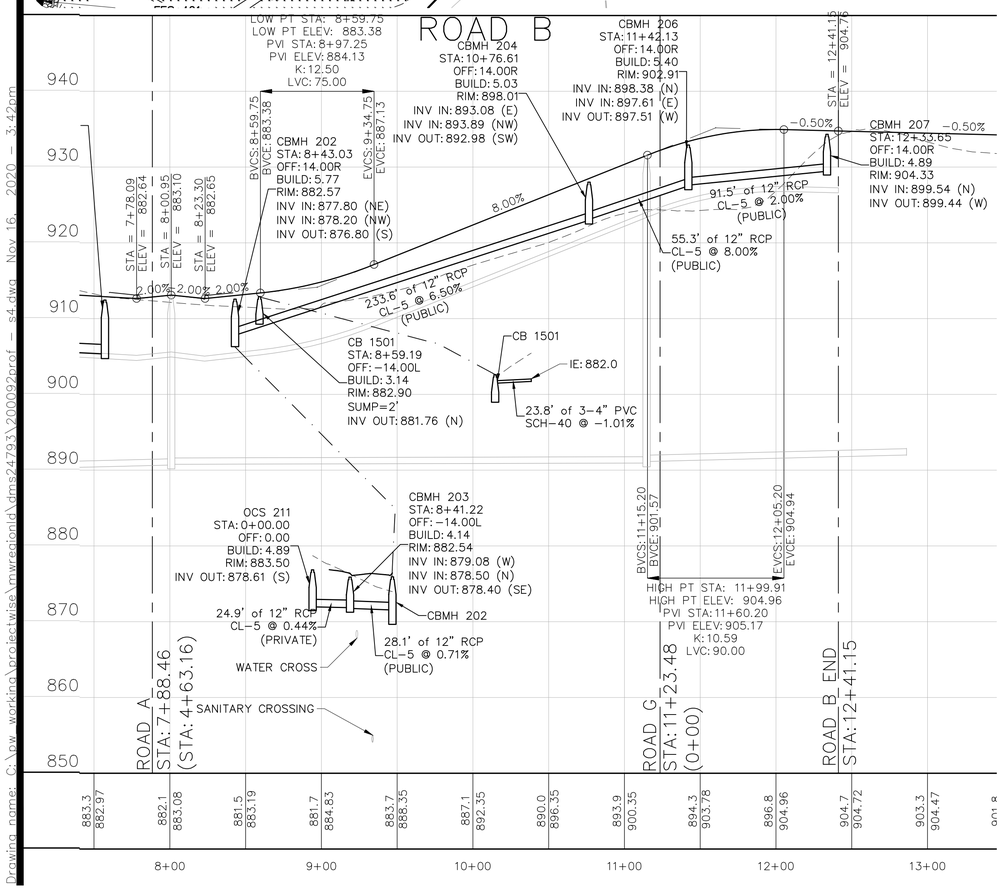

CB 209 TO CBMH 207

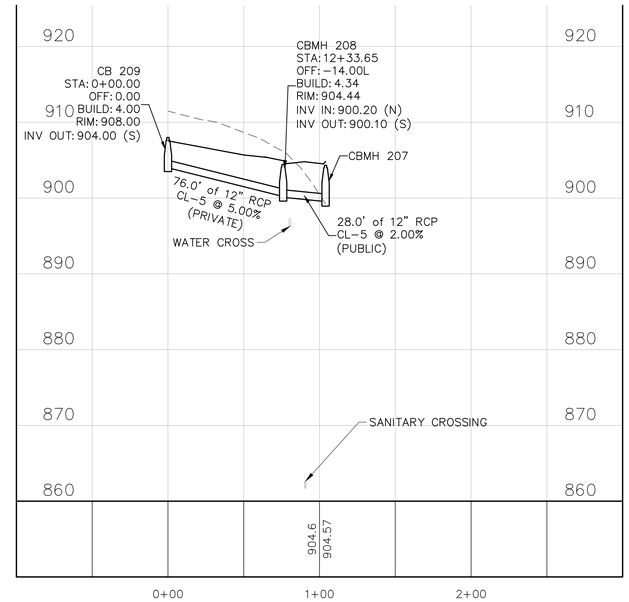

CB 205 TO CBMH 204

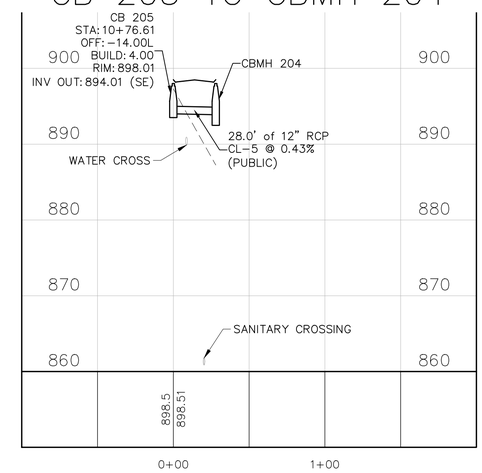

OCS 301 TO FES 300

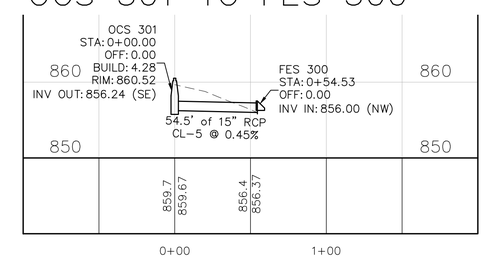

NOTES:

1. ALL PUBLIC INTERSECTION CURB RETURNS SHALL BE B618, EXCEPT IF NOTED.
2. ALL PRIVATE INTERSECTION CURB RETURNS SHALL BE B618, EXCEPT IF NOTED.
3. ALSO SEE SITE SIGNAGE AND LIGHTING PLAN FOR SIGN AND LIGHTING LOCATIONS.

0 25 50 100
SCALE IN FEET

STRUCTURE AND CASTING SCHEDULE

MH NO.	SIZE	CASTING*
201A	48" DIA	R-1642
201	48" DIA	R-3067-v
202	60" DIA	R-3067-V
203	60" DIA	R-3067-V
204	48" DIA	R-3067-V
205	2'x3'	R-3067-V
206	48" DIA	R-3067-V
207	48" DIA	R-3067-V
208	48" DIA	R-3067-V
209	27" DIA	R-4342
210	48" DIA	R-3067-V
211	48" DIA	GRATE
301	48" DIA	GRATE
1501	2'x3' DIA	R-3067-V

CB 210 TO CBMH 206

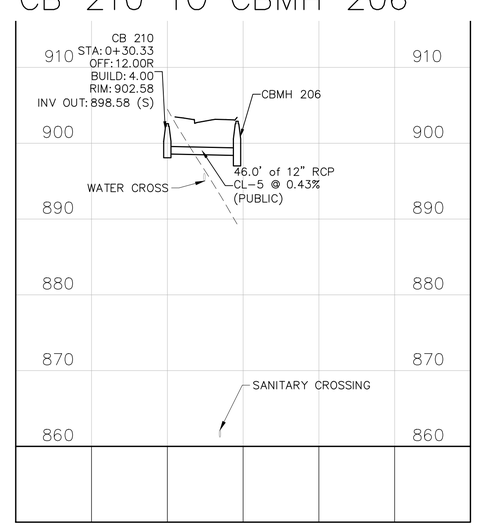

CB 202 TO FES 200

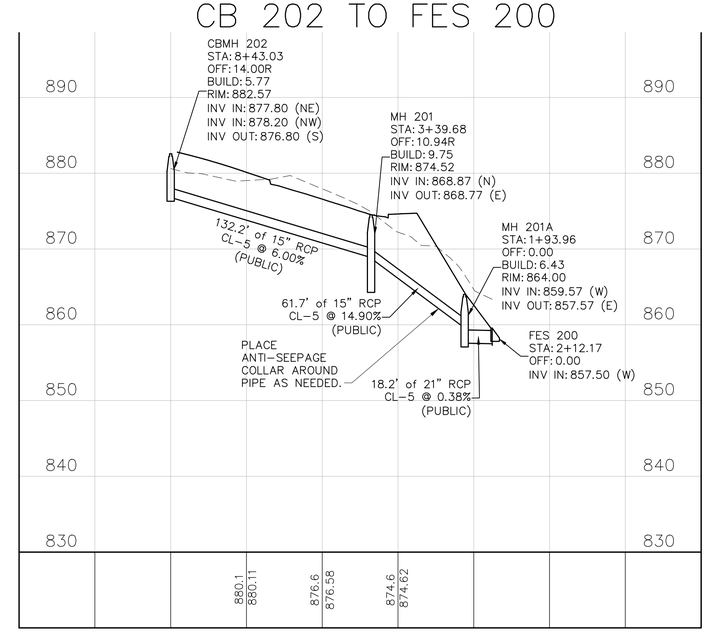

ALLIANT
733 Marquette Avenue
Suite 700
Minneapolis, MN 55402
612.758.3080
www.alliant-inc.com

CANVAS AT INVER GROVE HEIGHTS

INVER GROVE HEIGHTS, MINNESOTA

FINAL PLAT - PHASE 1

STREET AND STORM SEWER PLAN AND PROFILES

I hereby certify that this plan, specification, or report was prepared by me or under my direct supervision and that I am a duly Licensed PROFESSIONAL ENGINEER under the laws of the State of MINNESOTA

MARK RAUSCH, PE

Date License No.

QUALITY ASSURANCE/CONTROL

BY	DATE

DATE	ISSUE
11-16-2020	FINAL PLAT-PH1 SUBMITTAL

PROJECT TEAM DATA

DESIGNED: MPR
DRAWN: SIL, TAS
PROJECT NO: 220-0092

Drawing name: G:\eng_working\projectwise\mwregion1\dms24793\200092prof - 64.dwg Nov 16, 2020 - 3:42pm

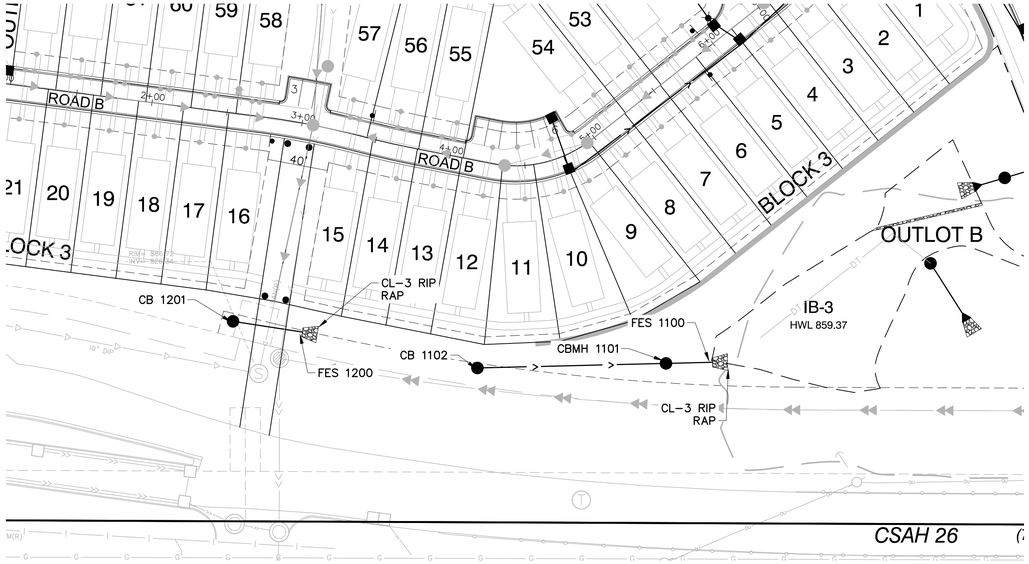

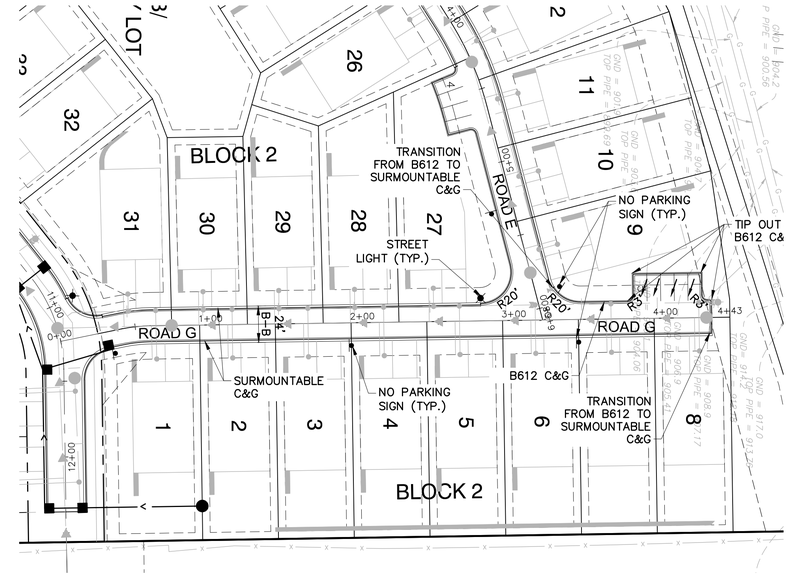

ALLIANT
733 Marquette Avenue
Suite 700
Minneapolis, MN 55402
612.758.3080
www.alliant-inc.com

CB 1102 TO FES 1000

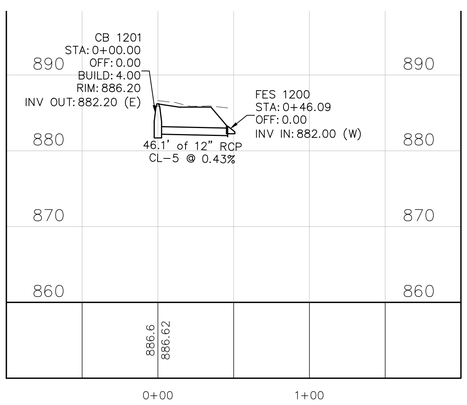

N

STRUCTURE AND CASTING SCHEDULE		
MH NO.	SIZE	CASTING*
1101	48" DIA	R-4342
1102	27" DIA	R-4342
1201	27" DIA	R-4342

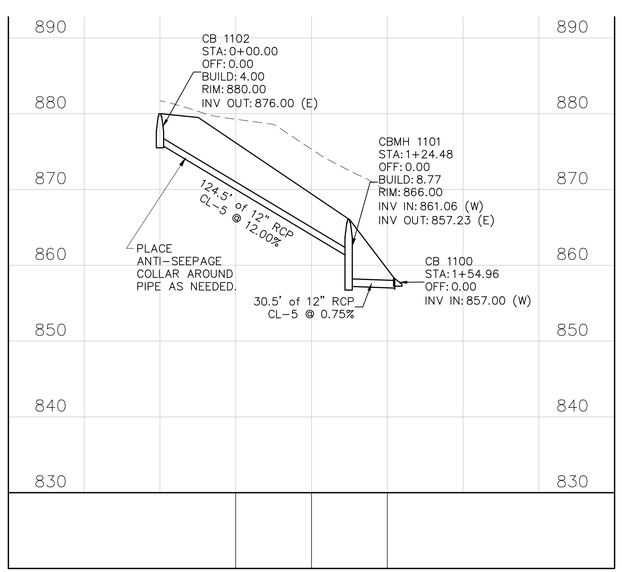

NOTES:

1. ALL PUBLIC INTERSECTION CURB RETURNS SHALL BE B618, EXCEPT IF NOTED.
2. ALL PRIVATE INTERSECTION CURB RETURNS SHALL BE B618, EXCEPT IF NOTED.
3. ALSO SEE SITE SIGNAGE AND LIGHTING PLAN FOR SIGN AND LIGHTING LOCATIONS.

FOR REVIEW ONLY
PRELIMINARY
NOT FOR CONSTRUCTION

0 25 50 100
SCALE IN FEET

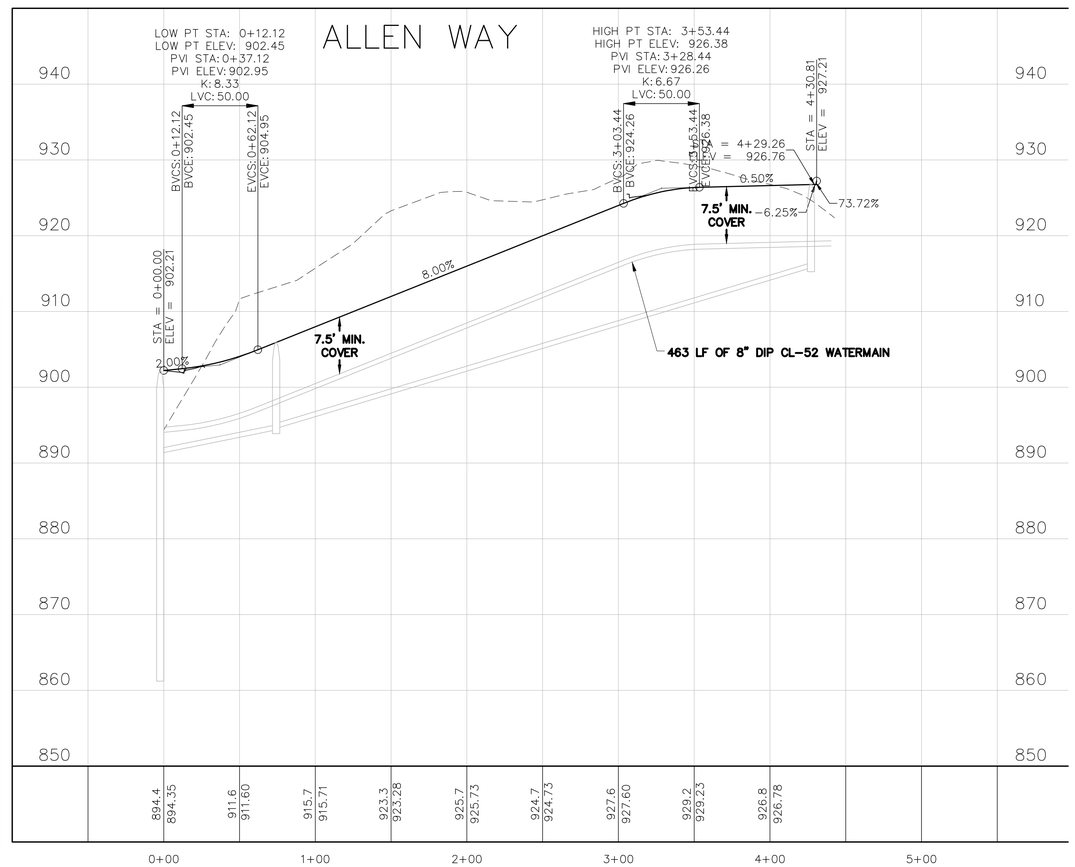

CANVAS AT INVER GROVE HEIGHTS

INVER GROVE HEIGHTS, MINNESOTA

FINAL PLAT - PHASE 1

STREET AND STORM SEWER PLAN AND PROFILES

I hereby certify that this plan, specification, or report was prepared by me or under my direct supervision and that I am a duly Licensed PROFESSIONAL ENGINEER under the laws of the State of MINNESOTA

MARK RAUSCH, PE

Date License No.

QUALITY ASSURANCE/CONTROL

BY DATE

DATE	ISSUE
11-16-2020	FINAL PLAT-PH1 SUBMITTAL

PROJECT TEAM DATA

DESIGNED: MPR
DRAWN: SIL, TAS
PROJECT NO: 220-0092

Drawing name: G:\pw_working\projectwise\mwregional\dms24793\200092prof - s6.dwg Nov 16, 2020 - 3:42pm

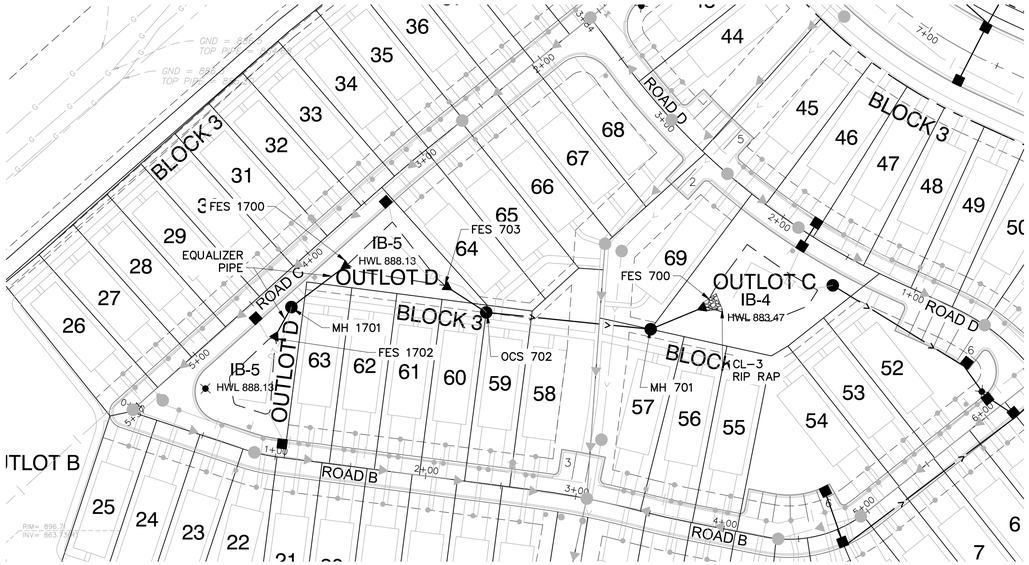

N

STRUCTURE AND CASTING SCHEDULE		
MH NO.	SIZE	CASTING*
701	48" DIA	R-1642
702	48" DIA	GRATE
1701	48" DIA	R-1642

FES 703 TO FES 700

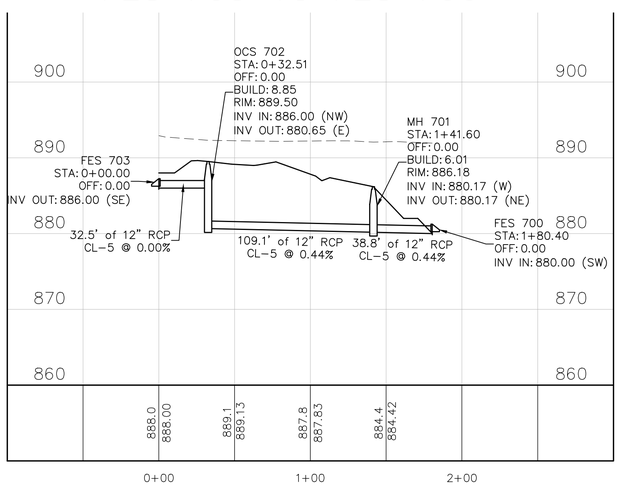

CB 1102 TO FES 1000

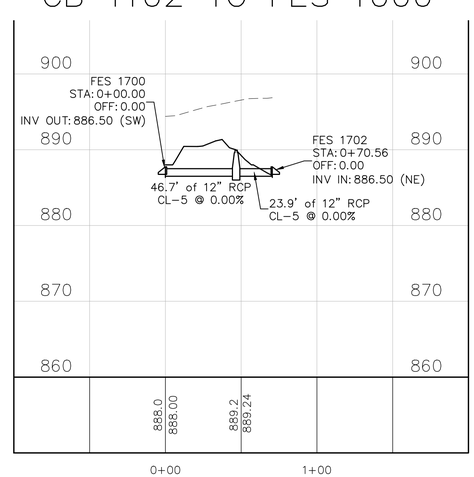

0 25 50 100
SCALE IN FEET

FOR REVIEW ONLY
PRELIMINARY
NOT FOR CONSTRUCTION

ALLIANT
733 Marquette Avenue
Suite 700
Minneapolis, MN 55402
612.758.3080
www.alliant-inc.com

CANVAS AT INVER GROVE HEIGHTS
INVER GROVE HEIGHTS, MINNESOTA
FINAL PLAT - PHASE 1
STORM SEWER PLAN AND PROFILES

I hereby certify that this plan, specification, or report was prepared by me or under my direct supervision and that I am a duly Licensed PROFESSIONAL ENGINEER under the laws of the State of MINNESOTA

MARK RAUSCH, PE

Date License No.

QUALITY ASSURANCE/CONTROL

BY	DATE

DATE	ISSUE
11-16-2020	FINAL PLAT-PH1 SUBMITTAL

PROJECT TEAM DATA

DESIGNED:	MPR
DRAWN:	SIL, TAS
PROJECT NO:	220-0092

31

SHEET 31 OF 39

Drawing name: G:\cw working\projectwise\nwregional\dms24793\200092prof - s7.dwg Nov 16, 2020 - 3:43pm

OCS 112

NOT TO SCALE

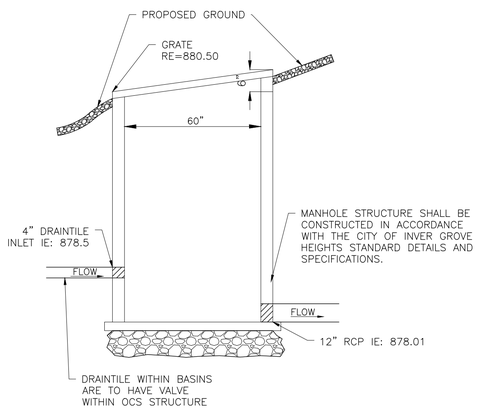

OCS 211

NOT TO SCALE

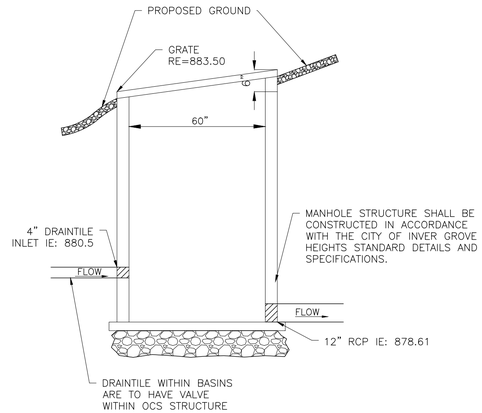

OCS 301

NOT TO SCALE

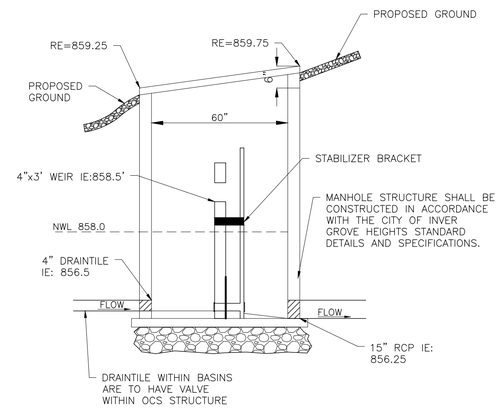

OCS 503

NOT TO SCALE

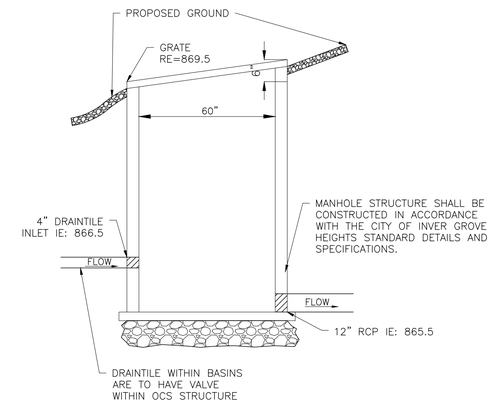

OCS 517

NOT TO SCALE

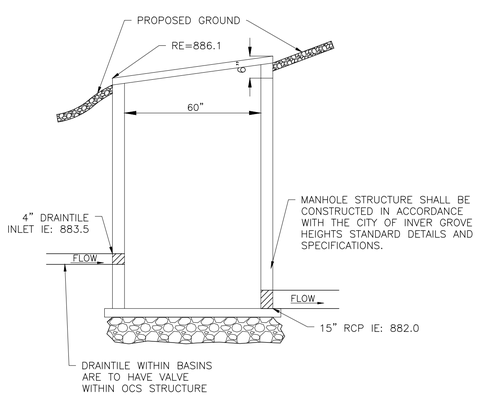

OCS 702

NOT TO SCALE

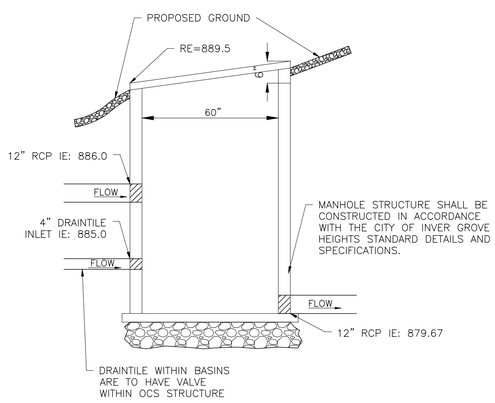

OCS 901

NOT TO SCALE

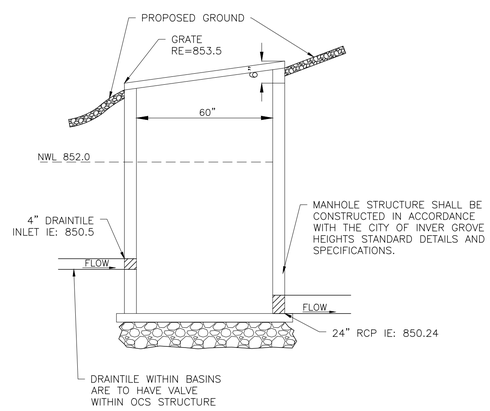

OCS 1001

NOT TO SCALE

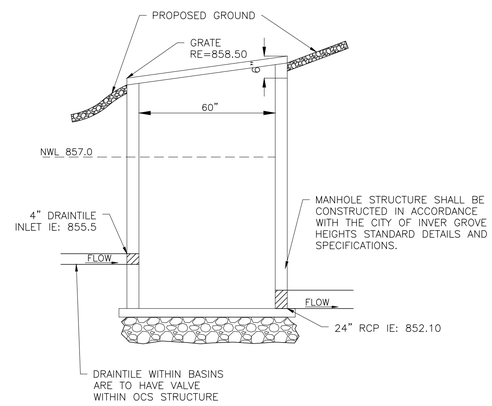

FOR REVIEW ONLY
PRELIMINARY
NOT FOR CONSTRUCTION

ALLIANT
733 Marquette Avenue
Suite 700
Minneapolis, MN 55402
612.758.3080
www.alliant-inc.com

CANVAS AT INVER GROVE HEIGHTS

INVER GROVE HEIGHTS, MINNESOTA

FINAL PLAT - PHASE 1

OUTLET CONTROL STRUCTURE DETAILS

I hereby certify that this plan, specification, or report was prepared by me or under my direct supervision and that I am a duly Licensed PROFESSIONAL ENGINEER under the laws of the State of MINNESOTA

MARK RAUSCH, PE

Date License No.

QUALITY ASSURANCE/CONTROL

BY	DATE

DATE	ISSUE
11-16-2020	FINAL PLAT-PH1 SUBMITTAL

PROJECT TEAM DATA

DESIGNED:	MPR
DRAWN:	SIL, TAS
PROJECT NO:	220-0092

Drawing name: G:\pw_working\projectwise\mwregional\dms24793\200092ocs.dwg Nov 16, 2020 - 3:43pm

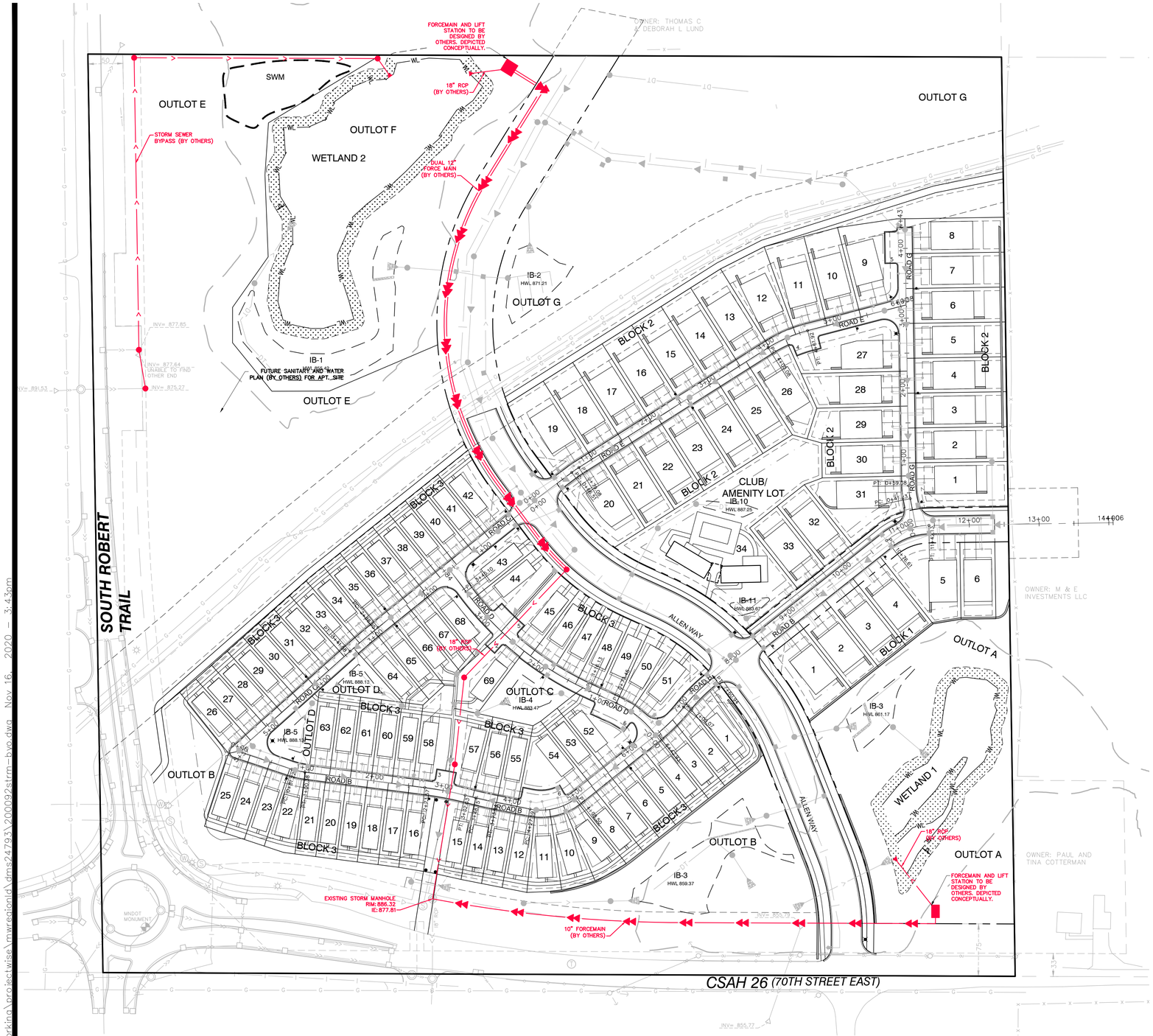

UTILITY NOTES:

1. EXISTING UTILITIES, SERVICE LOCATIONS AND ELEVATIONS SHALL BE VERIFIED IN FIELD PRIOR TO CONSTRUCTION.
2. FINAL DESIGN OF REGIONAL STORM SEWER TO BE DESIGNED BY WENCK. SEE WENCK PLAN SHEET FOR MORE DETAILS. CONTRACTOR TO COORDINATE WITH CITY AND ENGINEER.
3. CONTRACTOR IS RESPONSIBLE FOR ALL PERMITS PRIOR TO THE START OF CONSTRUCTION.
4. ALL UTILITY WORK WITHIN THE R.O.W. SHALL COMPLY WITH THE CITY OF INVER GROVE HEIGHTS ENGINEERING GUIDELINES.
5. NOTIFY GOPHER STATE ONE CALL 48 HOURS IN ADVANCE OF ANY UTILITY WORK.
6. PROVIDE TEMPORARY TRAFFIC CONTROL IN COMPLIANCE WITH MNDOT "TEMPORARY TRAFFIC CONTROL ZONE LAYOUTS–FIELD MANUAL" LATEST REVISION, FOR ANY CONSTRUCTION WITHIN PUBLIC R.O.W.

LEGEND:

- EXISTING GATE VALVE
- EXISTING HYDRANT
- EXISTING WATERMAIN
- EXISTING CATCH BASIN
- EXISTING STORM MANHOLE
- EXISTING STORM SEWER
- EXISTING SANITARY MANHOLE
- EXISTING SANITARY SEWER
- PROPOSED CATCH BASIN
- PROPOSED WATERMAIN
- PROPOSED SANITARY MANHOLE
- PROPOSED GATE VALVE
- PROPOSED HYDRANT
- 4" PERFORATED DRAINTILE
- PROPOSED STORM SEWER
- PROPOSED SANITARY SEWER
- STORM SEWER (BY OTHERS)
- FORCEMAIN (BY OTHERS)
- STORM SEWER MANHOLE (BY OTHERS)

FOR REVIEW ONLY
PRELIMINARY
NOT FOR CONSTRUCTION

N

0 40 80 160
SCALE IN FEET

ALLIANT
733 Marquette Avenue
Suite 700
Minneapolis, MN 55402
612.758.3080
www.alliant-inc.com

CANVAS AT INVER GROVE HEIGHTS
INVER GROVE HEIGHTS, MINNESOTA
FINAL PLAT - PHASE 1
REGIONAL STORM SEWER PLAN

I hereby certify that this plan, specification, or report was prepared by me or under my direct supervision and that I am a duly Licensed PROFESSIONAL ENGINEER under the laws of the State of MINNESOTA

MARK RAUSCH, PE

Date License No.

QUALITY ASSURANCE/CONTROL

BY	DATE

DATE	ISSUE
11-16-2020	FINAL PLAT-PH1 SUBMITTAL

PROJECT TEAM DATA

DESIGNED:	MPR
DRAWN:	SIL, TAS
PROJECT NO:	220-0092

Drawing name: C:\pw_working\projectwise\mwregion1\dms24793\200092strm-bys.dwg Nov 16, 2020 - 3:43pm

ALLEN WAY - 70TH STREET EAST

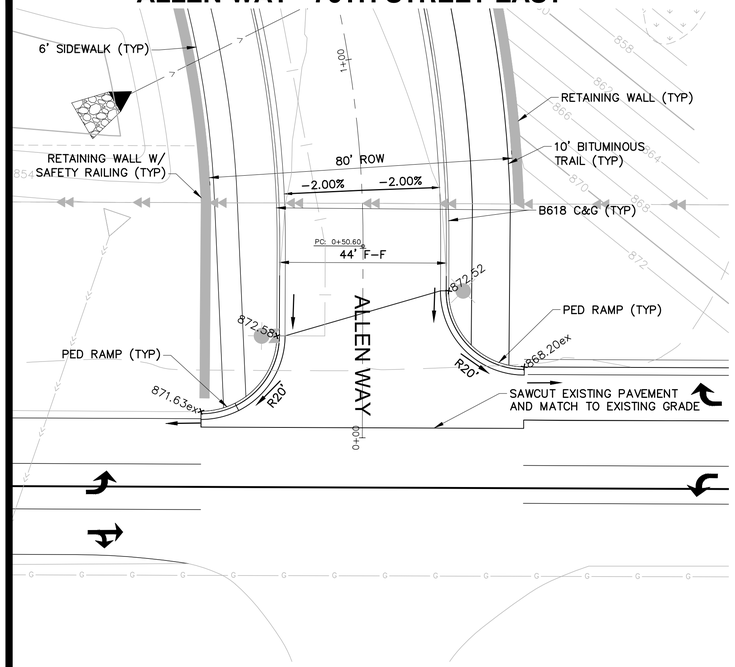

ALLEN WAY - ROAD B

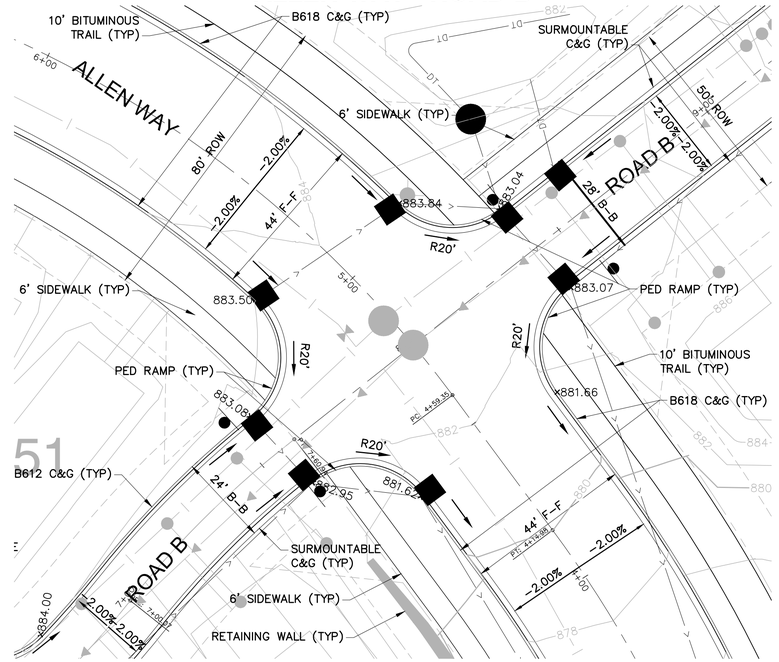

ALLEN WAY - ROAD C - ROAD E

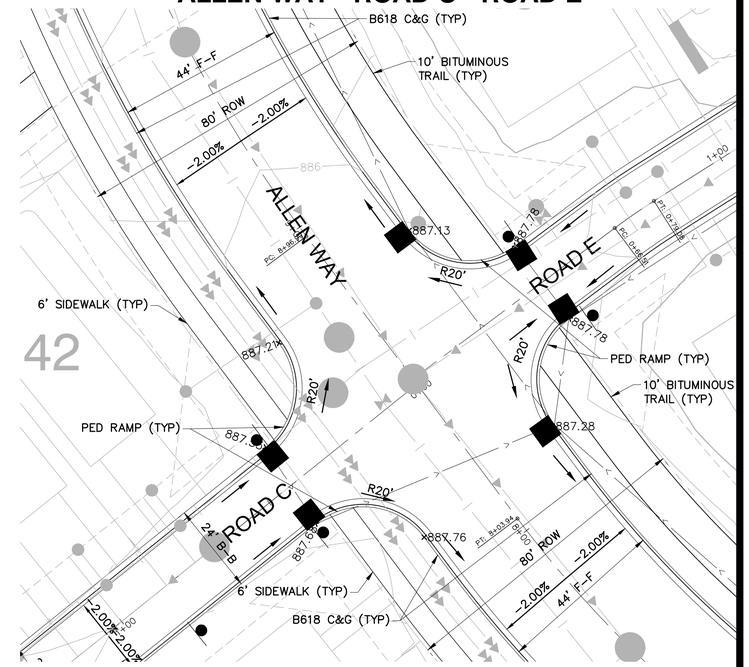

ALLIANT
733 Marquette Avenue
Suite 700
Minneapolis, MN 55402
612.758.3080
www.alliant-inc.com

N

0 10 20 40
SCALE IN FEET

FOR REVIEW ONLY
PRELIMINARY
NOT FOR CONSTRUCTION

ROAD G - ROAD E

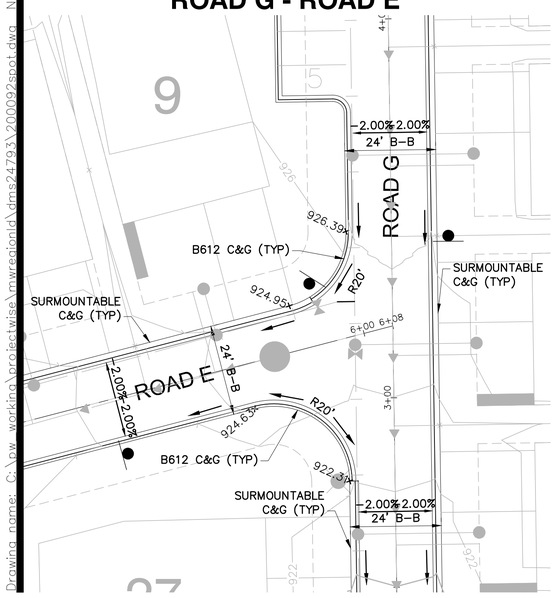

ROAD B - ROAD D

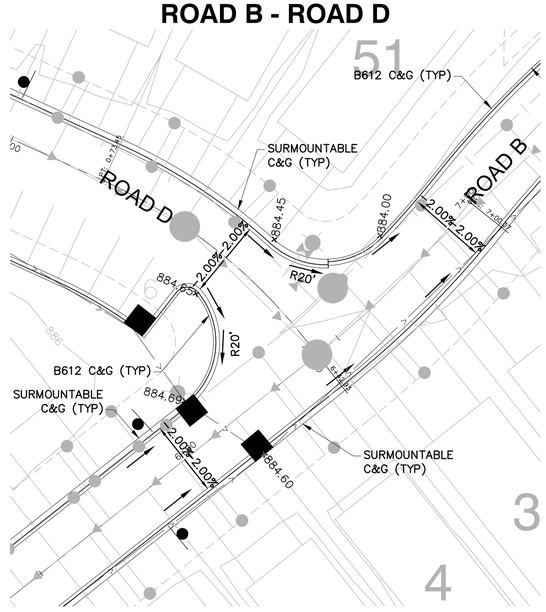

ROAD C - ROAD D

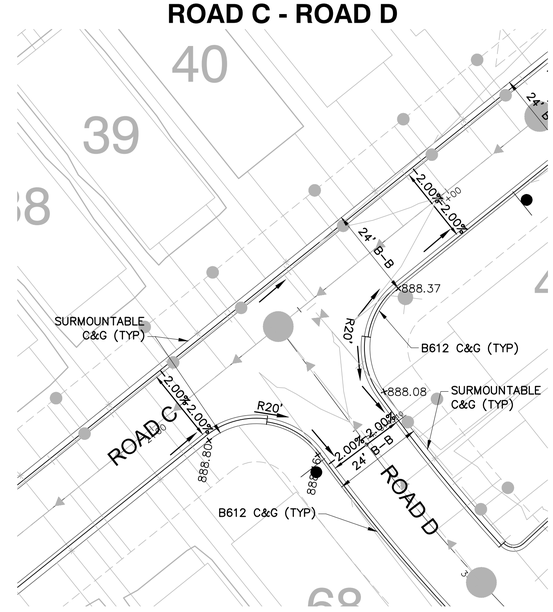

ROAD G - ROAD B

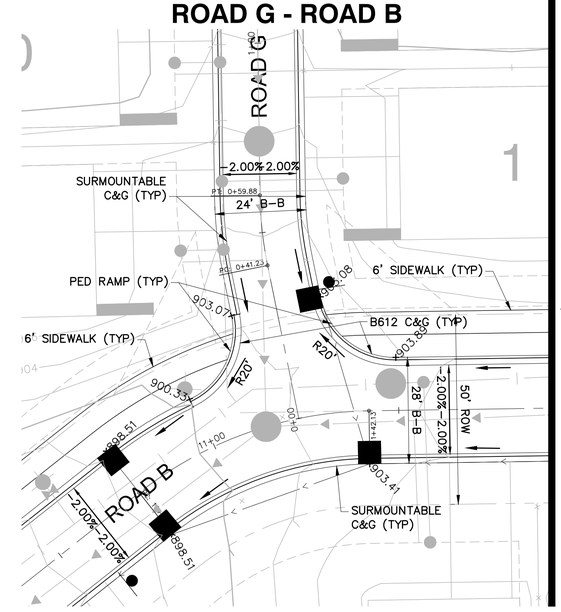

CANVAS AT INVER GROVE HEIGHTS

INVER GROVE HEIGHTS, MINNESOTA

FINAL PLAT - PHASE 1

STREET INTERSECTION DETAILS

I hereby certify that this plan, specification, or report was prepared by me or under my direct supervision and that I am a duly Licensed PROFESSIONAL ENGINEER under the laws of the State of MINNESOTA

MARK RAUSCH, PE

Date License No.

QUALITY ASSURANCE/CONTROL

BY	DATE

DATE	ISSUE
11-16-2020	FINAL PLAT-PH1 SUBMITTAL

PROJECT TEAM DATA

DESIGNED:	MPR
DRAWN:	SIL, TAS
PROJECT NO:	220-0092

34

SHEET 34 OF 39

Drawing name: C:\aw_working\projectwise\mwregional\dms24793\200092sgst.dwg Nov 16, 2020 - 4:20pm

EXISTING CONDITIONS

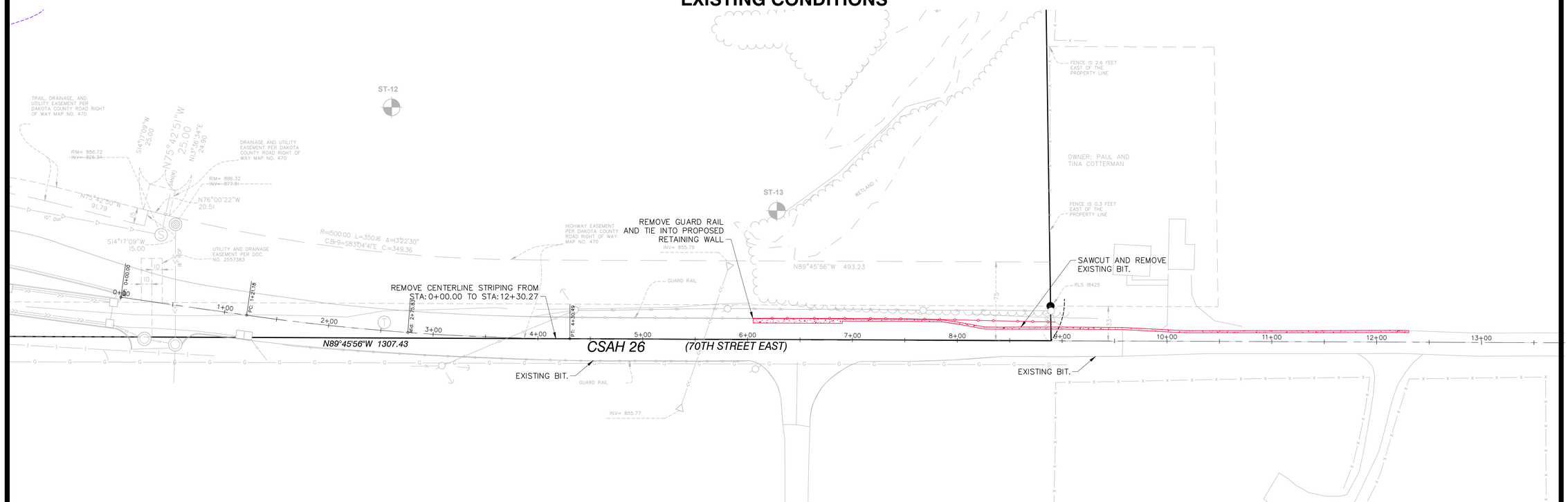

PROPOSED TURN LANE

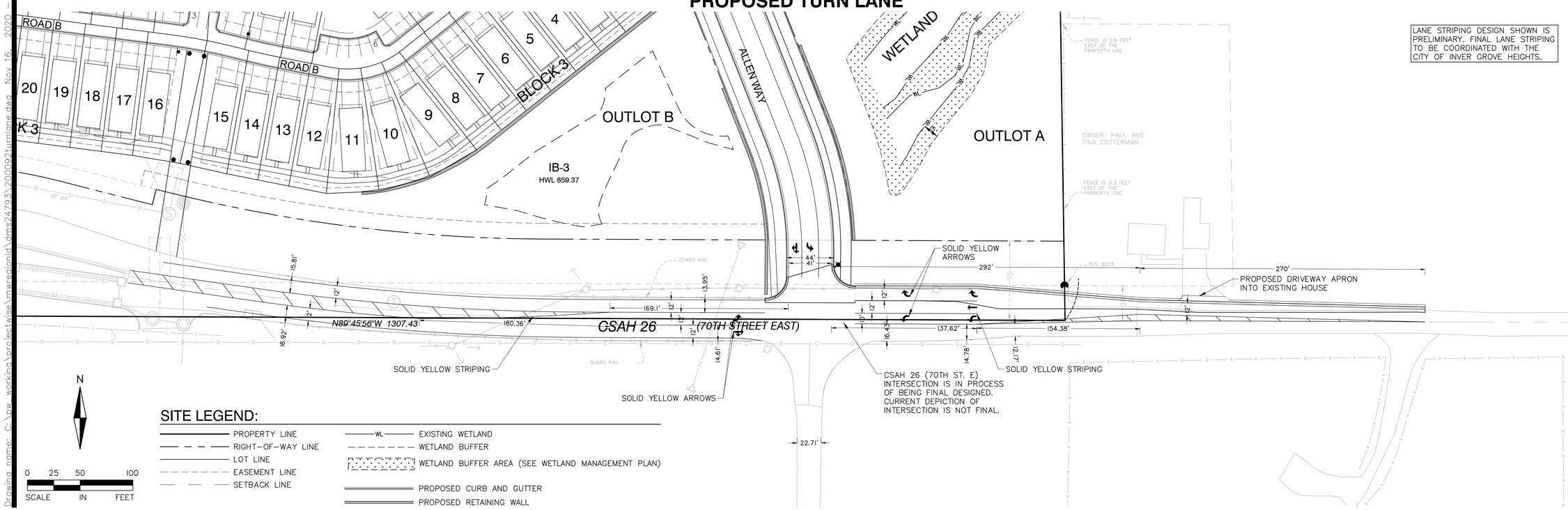

LANE STRIPING DESIGN SHOWN IS PRELIMINARY. FINAL LANE STRIPING TO BE COORDINATED WITH THE CITY OF INVER GROVE HEIGHTS.

SITE LEGEND:

- PROPERTY LINE
- RIGHT-OF-WAY LINE
- LOT LINE
- EASEMENT LINE
- SETBACK LINE
- WL — EXISTING WETLAND
- WETLAND BUFFER
- WETLAND BUFFER AREA (SEE WETLAND MANAGEMENT PLAN)
- PROPOSED CURB AND GUTTER
- PROPOSED RETAINING WALL

N

0 25 50 100
SCALE IN FEET

ALLIANT
733 Marquette Avenue
Suite 700
Minneapolis, MN 55402
612.758.3080
www.alliant-inc.com

CANVAS AT INVER GROVE HEIGHTS
INVER GROVE HEIGHTS, MINNESOTA
FINAL PLAT - PHASE 1
TURN LANE PLAN

I hereby certify that this plan, specification, or report was prepared by me or under my direct supervision and that I am a duly Licensed PROFESSIONAL ENGINEER under the laws of the State of MINNESOTA

MARK RAUSCH, PE

Date License No.

QUALITY ASSURANCE/CONTROL

BY	DATE

DATE	ISSUE
11-16-2020	FINAL PLAT-PH1 SUBMITTAL

PROJECT TEAM DATA

DESIGNED:	MPR
DRAWN:	SIL, TAS
PROJECT NO:	220-0092

Drawing name: C:\pw_working\projectwise\mwregion1\dms24793\200092\turnlane.dwg Nov 16, 2020 - 4:13pm

LEGEND:

- PROPOSED DECIDUOUS OVERSTORY TREE
- PROPOSED COMPACT TREE
- PROPOSED CONIFEROUS TREE
- INFILTRATION SEED & PLUG MIX:
  SEED MIX – MN SEED MIX 33-262 DRYSWALE/POND (SEE SEEDING NOTES)
  PLUG MIX – SEE PLANTING SCHEDULE
- SIDE SLOPE MIX (SEE SEEDING NOTES)

N

0 40 80 160
SCALE IN FEET

FOR REVIEW ONLY
PRELIMINARY
NOT FOR CONSTRUCTION

Drawing name: G:\pw_working\projectwise\mywesternld\dms24793\200092land.dwg Nov 16, 2020 - 3:47pm

ALLIANT
733 Marquette Avenue
Suite 700
Minneapolis, MN 55402
612.758.3080
www.alliant-inc.com

CANVAS AT INVER GROVE HEIGHTS

INVER GROVE HEIGHTS, MINNESOTA

FINAL PLAT - PHASE 1

LANDSCAPE PLAN

I hereby certify that this plan, specification, or report was prepared by me or under my direct supervision and that I am a duly Licensed LANDSCAPE ARCHITECT under the laws of the State of MINNESOTA

MARK RAUSCH, PE

Date License No.

QUALITY ASSURANCE/CONTROL

BY DATE

DATE	ISSUE
11-16-2020	FINAL PLAT-PH1 SUBMITTAL

PROJECT TEAM DATA

DESIGNED: MK
DRAWN: JG
PROJECT NO: 220-0092

36

SHEET 36 OF 39

LEGEND

- PROPOSED DECIDUOUS OVERSTORY TREE
- PROPOSED COMPACT TREE
- PROPOSED CONIFEROUS TREE
- INFILTRATION SEED & PLUG MIX:
  SEED MIX – MN SEED MIX 33-262 DRYSWALE/POND (SEE SEEDING NOTES)
  PLUG MIX – SEE PLANTING SCHEDULE
- SIDE SLOPE MIX (SEE SEEDING NOTES)

ALLIANT
733 Marquette Avenue
Suite 700
Minneapolis, MN 55402
612.758.3080
www.alliant-inc.com

CANVAS AT INVER GROVE HEIGHTS

INVER GROVE HEIGHTS, MINNESOTA

FINAL PLAT - PHASE 1

LANDSCAPE PLAN

I hereby certify that this plan, specification, or report was prepared by me or under my direct supervision and that I am a duly Licensed LANDSCAPE ARCHITECT under the laws of the State of MINNESOTA

MARK KRONBECK, PLA, ASLA

Date License No.

QUALITY ASSURANCE/CONTROL

BY	DATE

DATE	ISSUE
11-16-2020	FINAL PLAT-PH1 SUBMITTAL

PRELIMINARY NOT FOR CONSTRUCTION

PROJECT TEAM DATA

DESIGNED: MK
DRAWN: JG
PROJECT NO: 220-0092

37

SHEET 37 OF 39

Drawing name: G:\pw_working\projectwise\mnregional\dms24793\200092\land.dwg Nov 16, 2020 - 3:49pm

LEGEND

- PROPOSED DECIDUOUS OVERSTORY TREE
- PROPOSED COMPACT TREE
- PROPOSED CONIFEROUS TREE
- INFILTRATION SEED & PLUG MIX:
  SEED MIX – MN SEED MIX 33-262 DRYSWALE/POND (SEE SEEDING NOTES)
  PLUG MIX – SEE PLANTING SCHEDULE
- SIDE SLOPE MIX (SEE SEEDING NOTES)

ALLIANT
733 Marquette Avenue
Suite 700
Minneapolis, MN 55402
612.758.3080
www.alliant-inc.com

CANVAS AT INVER GROVE HEIGHTS

INVER GROVE HEIGHTS, MINNESOTA

FINAL PLAT - PHASE 1

LANDSCAPE PLAN

I hereby certify that this plan, specification, or report was prepared by me or under my direct supervision and that I am a duly Licensed LANDSCAPE ARCHITECT under the laws of the State of MINNESOTA

MARK KRONBECK, PLA, ASLA

Date License No.

QUALITY ASSURANCE/CONTROL

BY DATE

DATE	ISSUE
11-16-2020	FINAL PLAT-PH1 SUBMITTAL

PROJECT TEAM DATA

DESIGNED: MK
DRAWN: JG
PROJECT NO: 220-0092

Drawing name: G:\pw_working\projectwise\mnregional\dms24793\200092land.dwg Nov 16, 2020 - 3:51pm

LANDSCAPE SCHEDULE

PHASE 1	FUTURE	TOTAL	KEY	COMMON NAME / SCIENTIFIC NAME	SIZE	NOTES	INCHES OF MITIGATION
OVERSTORY TREES							**732.5**
19	1	20	**AB**	Autumn Blaze Red Maple / Acer x freemanii 'Jeffersred'	2.5" Cal. B&B	Straight Trunk, No V-Crotch.	50
25	7	32	**DB**	Dakota Pinnacle Birch / Betula platyphylla 'Fargo'	2.5" Cal. B&B	Straight Trunk, No V-Crotch.	80
7	3	10	**GL**	Greenspire Linden / Tilia cordata 'Greenspire'	2.5" Cal. B&B	Straight Trunk, No V-Crotch.	25
6	2	8	**HB**	Common Hackberry / Celtis occidentalis	2.5" Cal. B&B	Straight Trunk, No V-Crotch.	20
31		31	**KO**	Kindred Spirit Oak / Quercus x warei 'Nadler'	2.5" Cal. B&B	Straight Trunk, No V-Crotch.	77.5
5	1	6	**LL**	Littleleaf Linden /Tilia cordata	2.5" Cal. B&B	Straight Trunk, No V-Crotch.	15
27	2	29	**PE**	Patriot Elm / Ulmus patriot	2.5" Cal. B&B	Straight Trunk, No V-Crotch.	72.5
6	4	10	**PO**	Pin Oak / Quercus alba	2.5" Cal. B&B	Straight Trunk, No V-Crotch.	25
23	2	25	**PS**	Prairie Sentinel Hackberry / Celtis JFS-KSU1	2.5" Cal. B&B	Straight Trunk, No V-Crotch.	62.5
31	18	49	**RB**	River Birch / Betula nigra	2.5" Cal. B&B	Straight Trunk, No V-Crotch.	122.5
16	2	18	**SG**	Sienna Glen Maple / Acer x freemanii 'Sienna'	2.5" Cal. B&B	Straight Trunk, No V-Crotch.	45
14	3	17	**SH**	Skyline Honeylocust / Gleditsa tricanthos var. inermis 'Skycole'	2.5" Cal. B&B	Straight Trunk, No V-Crotch.	42.5
14	6	20	**SM**	Sugar Maple / Acer saccharum 'Bailsta'	2.5" Cal. B&B	Straight Trunk, No V-Crotch.	50
15	3	18	**WO**	Swamp White Oak / Quercus bicolor	2.5" Cal. B&B	Straight Trunk, No V-Crotch.	45
CONIFERS							**759.3**
64	47	111	**BF**	Balsam Fir / Abies balsamea	6' ht. B&B	Full Form	277.5
76	58	134	**BS**	Blackhills Spruce / Picea glauca densata	8' ht. B&B	Full Form	442.2
12		12	**RP**	Red Pine / Pinus resinosa	8' ht. B&B	Full Form	39.6
391	**159**	**550**	**Total Trees Proposed**			**Total Mitigation Inches**	**1491.8**
NATIVE PLUG MIXES							
				PLUG MIX SHALL CONTAIN A DIVERSITY OF SPECIES (10 MINIMUM) OF GRASSES, SEDGES AND FORBES. A MINIMUM OF 50% OF TOTAL PLUGS SHALL BE GRASSES. ACCEPTABLE SPECIES INCLUDE: GRASSES SWITCHGRASS Panicum virgatum RICE-CUT GRASS Leersia oryzoides PRAIRIE BROME Bromus kalmii FOWL BLUEGRASS Poa palustris VIRGINIA WILD RYE Elymus virginicus FORBS GOLDEN ALEXANDERS Zizia aurea NEW ENGLAND ASTER Symphyotrichum novae-angliae BEEBALM Monarda fistulosa MOUNTAIN MINT Pycnanthemum virginianum GRASS LEAVED GOLDENROD Solidago graminifolia SNEEZEWEED Helenium autumnale GREEN-HEADED CONEFLOWER Rudbeckia laciniata CANADA ANEMONE Anemone canadensis SEDGES FOX SEDGE Carex vulpinoidea BOTTLE BRUSH SEDGE Carex comosa PORCUPINE SEDGE Carex hystericina TUSSOCK SEDGE Carex stricta	PLUG	PLANT PLUGS 48" O.C. INTO SEEDING AND EROSION CONTROL BLANKETS. INFILTRATION BASIN SEEDING/PLANTING SHALL BE IN THE FOLLOWING SEQUENCE: 1. BASE SEEDING 2. EROSION CONTROL BLANKET 3. NATIVE PLUGING INTO BLANKET	

Notes:
- Quantities on plan supercede list quantities in event of discrepency
- Height to DBH equivalency used 6'=2.5"

FOR REVIEW ONLY
PRELIMINARY
NOT FOR CONSTRUCTION

LANDSCAPE NOTES

1. CONTRACTOR IS RESPONSIBLE FOR CALLING GOPHER STATE ONE CALL AT 811 OR 651–454–0002 FOR LOCATING ALL UNDERGROUND UTILITIES AND AVOID DAMAGE TO UTILITIES DURING THE COURSE OF THE WORK.
2. INSTALL 4" MIN. TOP SOIL TO ALL SOD, SEED AND SHRUB AREAS. FINE GRADE ALL SOD AND SEED AREAS. INSTALL 12" PLANTING SOIL TO ALL PERENNIAL & ANNUAL AREAS.
3. STAKE OR MARK ALL PLANT MATERIAL LOCATIONS PRIOR TO INSTALLATION. HAVE OWNERS REPRESENTATIVE APPROVE ALL STAKING PRIOR TO INSTALLATION.
4. WHERE SHREDDED HARDWOOD MULCH IS SPECIFIED, BED MULCH WITH 4" DEPTH OF DARK BROWN SHREDDED HARDWOOD MULCH OVER FILTER FABRIC.
5. POLY–EDGER TO BE VALLEY VIEW BLACK DIAMOND OR APPROVED EQUAL.
6. INSTALL 4–6" DEPTH DARK BROWN SHREDDED HARDWOOD MULCH AROUND ROOT SAUCER OF ALL TREES ISOLATED FROM PLANT BEDS.
7. PLANTING SOIL SHALL BE 1:1:1 CONSISTING OF 33% SELECT LOAMY TOPSOIL, 33% PEAT MOSS, 33% PIT RUN SAND.
8. COMPLETELY GUARANTEE ALL WORK FOR A PERIOD OF ONE YEAR BEGINNING AT THE DATE OF ACCEPTANCE. MAKE ALL REPLACEMENTS PROMPTLY (AS PER DIRECTION OF OWNER).
9. ALL MATERIAL SHALL COMPLY WITH THE LATEST EDITION OF THE AMERICAN STANDARD FOR NURSERY STOCK, AMERICAN ASSOCIATION OF NURSERYMEN.
10. ALL TREE TRUNKS SHALL BE WRAPPED WITH BROWN CREPE TREE WRAP. APPLY WRAP IN NOVEMBER AND REMOVE IN APRIL.
11. MAINTAIN ALL PLANT MATERIALS, INCLUDING WATERING, UNTIL THE TIME OF ACCEPTANCE.
12. COORDINATE INSTALLATION WITH GENERAL CONTRACTOR.
13. STAKING AND GUYING OF TREES OPTIONAL: MAINTAIN PLUMBNESS OF TREES FOR DURATION OF WARRANTY PERIOD.
14. SWEEP AND WASH ALL PAVED SURFACES AND REMOVE ALL DEBRIS RESULTING FROM LANDSCAPE OPERATIONS.
15. SUPPLY DESIGN AND INSTALLATION OF AN IRRIGATION SYSTEM TO PROVIDE COVERAGE OF SOD AND PLANTING AREAS. SOD AND SHRUB AREAS TO BE ON SEPARATE ZONES. PROVIDE RAIN SENSOR. USE RAINBIRD OR APPROVED EQUAL COORDINATE WITH G.C.
16. GENERAL & LANDSCAPE CONTRACTOR SHALL FOLLOW THE COUNTY/STATE SOIL & EROSION CONTROL SPECIFICATIONS FOR DISTURBED AREA STABILIZATION.
17. FIRE HYDRANTS MUST HAVE 5' MINIMUM CLEARANCE. INSTALL PLANT MATERIAL SUCH THAT IT WILL PROVIDE A 5' CLEARANCE AROUND THE FIRE HYDRANT AT MATURITY.
18. SIGNS AROUND INFILTRATION POND TO READ, "NOTICE: NO SNOW STORAGE WITHIN INFILTRATION BASIN"

LANDSCAPE REQUIREMENTS

REQUIRED MITIGATION: 1,491 CALIPER INCHES
PROVIDED MITIGATION: 1,491.8 CALIPER INCHES

SEEDING NOTES:

INFILTRATION AREA SEED MIX: MN STATE SEED MIX 33–262 (DRY SWALE/POND). SEEDING RATE TO BE 44 LBS/ACRE (PURE LIVE SEED).

SIDE SLOPE SEED MIX: MN STATE SEED MIX 35–221 (DRY PRAIRIE GENERAL) SEEDING RATE TO BE 36.5 LBS/ACRE (PURE LIVE SEED).

APPLY SEED PER THE FOLLOWING: MULCH SEEDED AREAS WITH Mn/DOT TYPE 3 (MCIA CERTIFIED WEED FREE) MULCH AT A RATE OF 1 TON PER ACRE WITHIN 48 HOURS OF SEEDING. MULCH SHOULD THEN BE DISC ANCHORED TO KEEP IT FROM BLOWING AWAY.

SEEDING SHALL BE APPLIED FROM APRIL 15 – JULY 20 OR SEPTEMBER 20 – FREEZE UP.
IF HYDROSEEDING UTILIZE APPROXIMATELY 500 GALLONS OF WATER PER ACRE. REFER TO MN/DOT SPEC 3884 FOR PROPER INSTALLATION OF HYDRO–SEED. ALL NATIVE SEEDS USED ON THIS PROJECT SHALL BE CERTIFIED TO BE OF MINNESOTA ORIGIN BY THE MINNESOTA CROP IMPROVEMENT ASSOCIATION (MCIA). SITE TO BE PREPARED BY LOOSENING TOPSOIL TO A MINIMUM DEPTH OF 3 INCHES. THE SITE TO BE HARROWED OR RAKED FOLLOWING SEEDING, AND THEN PACKED USING A CULTI–PACKER OR EQUIVALENT. SEE MNDOT SEEDING MANUAL FOR REFERENCE.

MAINTAIN SEEDED AREAS BY WATERING, REMULCHING AND REPLANTING AS NECESSARY TO ESTABLISH A UNIFORMLY DENSE STAND OF THE SPECIFIED GRASSES UNTIL ACCEPTED. ANY AREAS FAILING TO ESTABLISH A STAND SHALL BE RESEEDED, REFERTILIZED AND REMULCHED WHENEVER 70% VEGETATIVE COVER IS NOT ACHIEVED. RESEEDING SHALL CONFORM IN ALL RESPECTS TO THESE SPECIFICATIONS. THE CONTRACTOR SHALL REPAIR ANY DAMAGE TO THE WORK AREAS RESULTING FROM EROSION AND/OR EQUIPMENT. THE CONTRACTOR SHALL REPAIR DAMAGE, INCLUDING REGRADING, RESEEDING, ETC. AS NECESSARY, BEFORE SIGNIFICANT DAMAGE OCCURS.

LOW FLOW INLET TO INFILTRATION BASIN SHALL BE PLUGGED DURING CONSTRUCTION AND DURING FIRST FULL GROWING SEASON TO ESTABLISH VEGETATION.

REFER TO MN STATE SEED MIX MANUAL.

ALLIANT
733 Marquette Avenue
Suite 700
Minneapolis, MN 55402
612.758.3080
www.alliant-inc.com

CANVAS AT INVER GROVE HEIGHTS
INVER GROVE HEIGHTS, MINNESOTA
FINAL PLAT - PHASE 1
LANDSCAPE SCHEDULE AND NOTES

I hereby certify that this plan, specification, or report was prepared by me or under my direct supervision and that I am a duly Licensed LANDSCAPE ARCHITECT under the laws of the State of MINNESOTA

MARK KRONBECK, PLA, ASLA

Date License No.

QUALITY ASSURANCE/CONTROL

BY DATE

DATE	ISSUE
11–16–2020	FINAL PLAT–PH1 SUBMITTAL

PROJECT TEAM DATA

DESIGNED: MK
DRAWN: JG
PROJECT NO: 220–0092

Drawing name: G:\cw working\projectwise\nwregional\dms24793\200092land.dwg Nov 16, 2020 – 3:51pm

P L A N N I N G R E P O R T
CITY OF INVER GROVE HEIGHTS

HEARING DATE: January 5, 2021 **CASE NO:** 20-51V

APPLICANT/PROPERTY OWNER: Tim Salscheider

REQUEST: Variances to allow more than one detached accessory structure, to allow an accessory structure 1,750 square feet in size, and to be located 10 feet from the side property lines.

LOCATION: 2306 99th Street

COMPREHENSIVE PLAN: RDR, Rural Density Residential

ZONING: E-1, Estate Residential

REVIEWING DIVISIONS: Planning
Engineering

PREPARED BY: Heather Botten
Associate Planner

BACKGROUND

The applicant is requesting variances to allow two detached accessory buildings on the property whereas one detached structure is allowed on property that is less than five (5) acres in size. One structure (pool house) would be 625 gross square feet in size, complying with setback and size requirements. The other structure is proposed at 1,750 square feet whereas 1,600 square feet is the maximum size allowed and the structure would be located within the 50-foot setback requirements along the north and east property lines. The applicant's property is 4.52 acres in size. The lot consists of a single-family home with an attached garage. A pool was constructed on the property in 2020. The lot has a large drainage and utility easement on the western portion of the property.

The maximum size for an accessory structure on a lot larger than 2.5 acres, but less than 5 acres is 1,600 gross square feet. Any accessory structure greater than 1,000 square feet must be setback at least 50 feet from all property lines. Only one detached accessory structure is allowed on parcels less than 5.0 acres. Residential property that is greater than 5 acres in size would be allowed two detached accessory buildings up to 2,400 gross square feet.

The accessory buildings would be over the maximum impervious surface allowance for the property. If the variances are approved the applicant would then work with the Engineering Department on obtaining the stormwater facilities maintenance agreement. The applicant has stated that the additional size and structure is needed for his own personal space and to store his own personal items. The closest neighboring homes are about 120 feet away from the accessory buildings.

SPECIFIC REQUESTS

The applicant is requesting the following:

1) A **variance** to allow an accessory structure 1,750 square feet in size whereas 1,600 gross square feet is the maximum; and

2) A **variance** to allow a structure larger than 1,000 gross square feet to be located 10 feet from the east property line and about 25 feet from the north property line whereas 50 feet is required.

3) A **variance** to allow two accessory structures whereas one is the maximum allowed on a lot less than five acres in size.

EVALUATION OF THE REQUEST

The following land uses, zoning districts, and comprehensive plan designations surround the property:

West – Single family residential; zoned A, Agricultural; guided RDR, Rural Density Residential
North - Single family residential; zoned E-1, Estate Residential; guided RDR, Rural Density Res
East - Single family residential; zoned E-1, Estate Residential; guided RDR, Rural Density Res
South – Single family residential; zoned E-1, Estate Residential; guided RDR, Rural Density Res

Engineering. Engineering has reviewed the plans. The construction of an accessory building(s) requires stormwater treatment on the property. Engineering has made some recommendations on conditions that should be added to the approval. These conditions are included in the list of conditions at the end of this report.

VARIANCE REVIEW

City Code Title 10, Chapter 3. Variances, states that the City Council may grant variances when they are in harmony with the general purposes and intent of the zoning ordinance and consistent with the comprehensive plan and establishes that there are practical difficulties in complying with the official control. In order to grant the requested variances, City Code identifies criteria which are to be considered practical difficulties. The applicant's request is reviewed below against those criteria.

1. *The variance request is in harmony with the general purpose and intent of the city code and consistent with the comprehensive plan.*

   City Council reviewed the accessory structure size requirements in 2006. Prior to 2006, all lots less than 5 acres were allowed a 1,000 square foot accessory building. The ordinance was amended to allow lots 2.5 acres or more, but less than 5 acres in size, located in an A or E-1 zoning district, one detached accessory structure up to a gross floor area of 1,600 square feet.

With this in mind, granting the variances may establish a precedence that is contrary to the intent of the City Code.

2. *The property owner proposes to use the property in a reasonable manner not permitted by the zoning ordinance.*

Staff believes the proposed size of the accessory building to be contrary to the intent of the zoning ordinance. There is an attached garage to the house, so the existing house is like others in the area and the property can be used in reasonable manner without the approval of a variance.

3. *The plight of the landowner is due to circumstances unique to the property not created by the landowner.*

The property is 4.52 acres in size. The applicant has an attached garage and is allowed a 1,600 gross square foot detached building. The request for an additional building and for a larger structure may be considered a convenience to the applicant, not a practical difficulty.

Due to the very large drainage and utility easement on the property that covers more than half of the buildable area, the topography of the site and the location of the drainfield and pool the lot does not allow for a structure greater than 1,000 square feet to meet the 50 foot setback requirements.

4. *The variance will not alter the essential character of the locality.*

Lots to the north, east and south of the applicants property are all greater than 2.5 acres and less than 3 acres and would have to comply with the same requirements as the applicants. The size and number of the structures could have an impact on the character of the locality.

5. *Economic considerations alone do not constitute an undue hardship.*
Economic considerations do not appear to be a basis or a sole basis for the request.

ALTERNATIVES

A. Approval: If the Planning Commission finds the requests to be acceptable, the Commission should recommend approval of the requests with at least the following conditions:

- Approval of A **variance** to allow an accessory structure 1,750 square feet in size whereas 1,600 gross square feet is the maximum; and

- A **variance** to allow a structure larger than 1,000 gross square feet to be located 10 feet from the east property line and about 25 feet from the north property line whereas 50 feet is required.

- A **variance** to allow two accessory structures whereas one is the maximum allowed on a lot less than five acres in size.

1. The site shall be developed in substantial conformance with the site plan on file with the Planning Department.

2. The accessory structures shall not be used for commercial uses, storage related to a commercial use, or home occupations.

3. A grading/erosion control plan shall be required at the time of the building permit application.

4. Final site, grading, storm water management, and erosion control plans shall be approved by the City Engineer.

5. A stormwater analysis and stormwater management plan would need to be done by a registered engineer.

6. The developer shall meet the conditions outlined in the City Engineers review memo and any subsequent correspondence.

Practical difficulty: To be stated

B. **Denial**. If the Planning Commission does not favor the proposed request(s), it should be recommended for denial, which could be based on the following rationale:

1. Denying the variance request does not preclude the applicant from reasonable use of the property.
2. Approval of the variance could set a precedent for other accessory building size, number and location variances.
3. The facts presented did not satisfy the criteria needed to show a practical difficulty on the lot to support granting a variance. The lot size is 4.52 acres in size, there is an attached garage and are allowed a 1,600 gross square foot accessory building.

RECOMMENDATION

Based on the information in the preceding report staff does not believe there is sufficient rationale to support all criteria of a variance review and therefore recommends denial of the request as proposed. Staff believes the applicant did not identify practical difficulties to comply with the ordinance as a 1,600 square foot accessory building could be constructed on the property and the size standards are not precluding the homeowner from reasonable use of the property. For the reasons listed in Alternative B staff is recommending **denial of the variance requests.**

Staff would be in support of a setback variance for a structure 1,600 gross square feet or smaller, pushed to the maximum setbacks possible on the lot with the practical difficulty being the large drainage and utility easement that covers more than half of the buildable area on the property and due to the topography and locations of the drainfield, house and pool.

Attachments: Exhibit A –Location Map
Exhibit B –Narrative
Exhibit C – Site Plan
Exhibit D – Aerial with estimated location of structures

2306 99th Street
Case No. 20-51V

THIS DRAWING IS NEITHER A LEGALLY RECORDED MAP NOR A SURVEY AND IS NOT INTENDED TO BE USED AS ONE. THIS DRAWING IS A COMPILATION OF RECORDS, INFORMATION AND DATA LOCATED IN VARIOUS CITY, COUNTY AND STATE OFFICES AND OTHER SOURCES AND IS TO BE USED FOR REFERENCE PURPOSES ONLY. THE CITY OF INVER GROVE HEIGHTS IS NOT RESPONSIBLE FOR ANY INACCURACIES HEREIN CONTAINED
Map produced by the City of Inver Grove Heights GIS Dept.
Copyright© City of Inver Grove Heights 2020

N

Exhibit A
Zoning and Location Map

Map not to scale

VARIANCE REQUEST

I Tim Salscheider am requesting a variance for multiple reasons.

1.) My property at 2306 99th St east is 4.52 acres in size with a total of 196,831sqft. I am looking to exceed the impervious surface allowance of 19,686sqft. Currently I have 19,578sqft of impervious surface. Below is a breakdown of the impervious surface.

196,831 total sqft of lot
6,489 sqft house
94 sqft sidewalk
10,755 sqft driveway
2,240 sqft patio around pool

Total sqft 19,578sqft
Under my allowance by 108 sqft
Proposed sqft to exceed allowance is 2,267 sqft
Detached garage 50'x35'= 1750 sqft
Second detached garage/pool house 25'x25'= 625 sqft
Both new buildings total sqft is 2375 sqft

The unique issue I run into with my property is the driveway is 10,755 sqft which is what puts me over allowed impervious surface compared to all my neighbors who have more normal sized driveways. All my impervious surface drains or sheds right to my land.

2.) I also need a variance to build more than one detached structure based on only having 4.52 acres of land. Both structures will be built to reflect the house. Siding, Roof and quality will be the same. One of the structures will be used as a detached garage the other will be used as pool house/outdoor area which because of the topography of my lot is the only space for this. Both structures are behind my house tucked in the woods not in sight of anybody but 2 neighbors.

3.) I will need to be at 10' for a setback to the property directly to the East of my property. I was told I would have to be 50' for a setback cause of the size of

the building being over 1000 sqft. The neighbor to the east would never build anything or do anything with his section of property where the detached garage would be located because that is where there drain field is for their septic system. Again because of the unique topography of my land the location I am trying to put detached garage is the only location it can go.

This is a unique lot with unique requests which I am hopeful will get approved.

Thanks

Tim Salscheider

CERTIFICATE OF SURVEY

PROPOSED DRAINAGE AND STORM WATER PONDING EASEMENT:

2306 99th Street Drainage Easement

Real property located in the City of Inver Grove Heights, Dakota County, Minnesota, described as follows:

Lot 4, Block 1, Maso Valley View Addition, Dakota County, Minnesota

A permanent easement for drainage purposes and all such purposes ancillary, incident or related thereto described as follows:

All of that part of Lot 4, Block 1, MASO VALLEY VIEW ADDITION according to the recorded plat thereof, Dakota County, Minnesota lying westerly of the following described line:

Commencing at the northwest corner of said Lot 4, thence North 89 degrees 32 minutes 03 seconds East, assumed bearing, 477.00 feet to the point of beginning; thence South 16 degrees 58 minutes 04 seconds West, 94.33 feet; thence South 89 degrees 32 minutes 03 seconds West, 41.93 feet; thence South 16 degrees 58 minutes 04 seconds West, 167.97 feet extending to the south property line there terminating

(000.0) DENOTES EXISTING ELEVATION
(901.0) DENOTES PROPOSED ELEVATION
INDICATES DIRECTION OF SURFACE DRAINAGE

(979.00) = FINISHED GARAGE FLOOR ELEVATION
(978.33) = TOP OF FOUNDATION ELEVATION
(959.65) = BASEMENT FLOOR ELEVATION (HOUSE)
(957.66) = BASEMENT FLOOR ELEVATION (SPORT COURT)

NOTE: BASEMENT HAS 9FT. POURED WALLS.
SPORT COURT HAS 11FT. POURED WALLS.

NOTE: ANY SLOPE EXCEEDING 4:1 SLOPE SHALL BE BLANKETED OR OTHER APPROVED EROSION CONTROL METHOD.

AREAS:

LOT AREA	196,031 SQ. FT
HOUSE AREA	6,483 SQ. FT
PORCH AREA	274 SQ. FT
DECK AREA	163 SQ. FT
SIDEWALK AREA	94 SQ. FT
DRIVEWAY AREA	10755 SQ. FT

REVISED 07-08-15 CHANGED BASEMENT TO 9FT. POURED WALLS AND CHANGED SPORT COURT TO 11FT. POURED WALLS, REVISE PROPOSED ELEVATIONS ACCORDINGLY.

REVISED 06-24-15 REVISE PROPOSED DRAINAGE AND STORM WATER PONDING EASEMENT PER THE DESCRIPTION PROVIDED BY THE CITY OF INVER GROVE HEIGHTS

REVISED 06-23-15 PER CITY REVIEW, ADD PROPOSED DRAINAGE EASEMENT, ADJUST ALTERNATE SEPTIC SITE OUT OF PROPOSED DRAINAGE EASEMENT, ADD ADDITIONAL SILT FENCE AND HD SILT FENCE, ADDITIONAL BIO ROLLS IN SWALES, AND ADD CBI INSET EROSION PROTECTION, ADD ADDITIONAL EXISTING GRADE CONTOURS ALONG WEST SIDE OF DRIVEWAY SHOWING EXISTING SWALE, REVISE DRIVEWAY CROSS SECTION TO REFLECT EXISTING SWALE, ADD NOTE REGARDING REQUIRED EROSION PROTECTION ON SLOPES EXCEEDING 4:1

REVISED 06-19-15 PER CITY REVIEW, ADD ADDITIONAL EXISTING CONTOURS, REDIRECT WESTERLY DRAINAGE PATTERN, ADD BIO-ROLL BAFFLES TO EASTERLY SWALE, ADD GRADING PERMISSION NOTE TO LOT 5, ADD EXISTING DRIVEWAY, SLOPES, AND ADD DRIVEWAY CROSS SECTION DETAIL.

REVISED 05-11-15 ADD OFFSET HUB STAKING INFORMATION, FROM HOUSE RESTAKE

REVISED 04-21-15 MOVED AND ROTATED HOUSE, LOWER PROPOSED HOUSE ELEVATION 3FT., ADDED PROPOSED GRADING CONTOURS

ADDRESS: 2306 99TH STREET EAST

SCALE : 1" = 40'

Legal Description:

LOT 4, BLOCK 1,
MASO VALLEY VIEW ADDITION,
DAKOTA COUNTY, MINNESOTA.

I hereby certify that this is a true and correct representation of a tract as shown and described hereon. As prepared by me this 28TH day of MARCH, 2015.

Russell P. Damlo Minn. Reg. No. 19086
RUSSELL P. DAMLO

ROBE ENGINEERING COMPANY, INC.
CONSULTING ENGINEERS, PLANNERS and LAND SURVEYORS
1200 EAST 148th ST., STE. 240, BURNSVILLE, MN 55337 PH (952)432-3000

PROJECT NO. 15085.00

PREPARED FOR:
4 LIFE BUILDERS

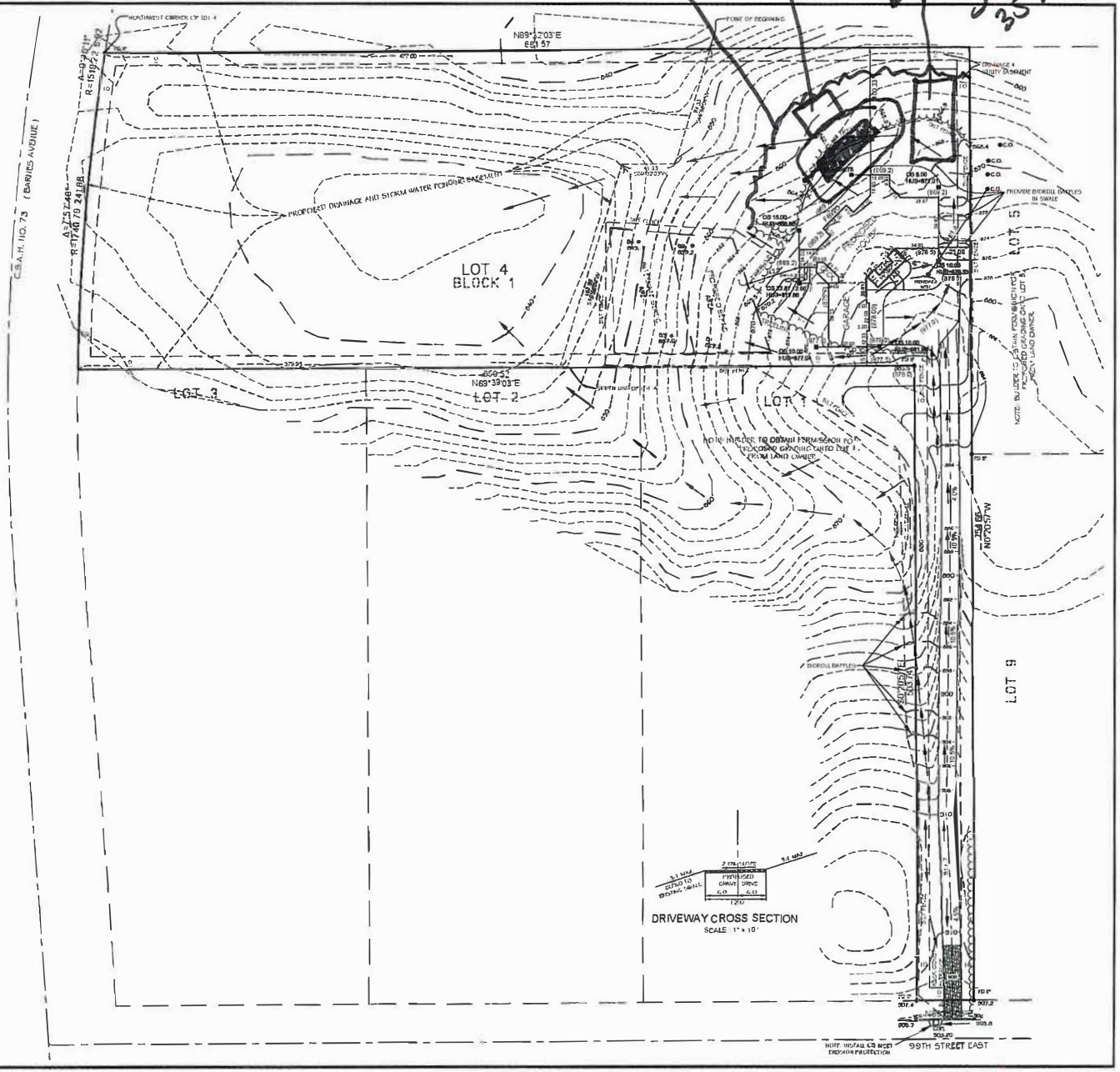

2306 99th Street
Case No. 20-51V

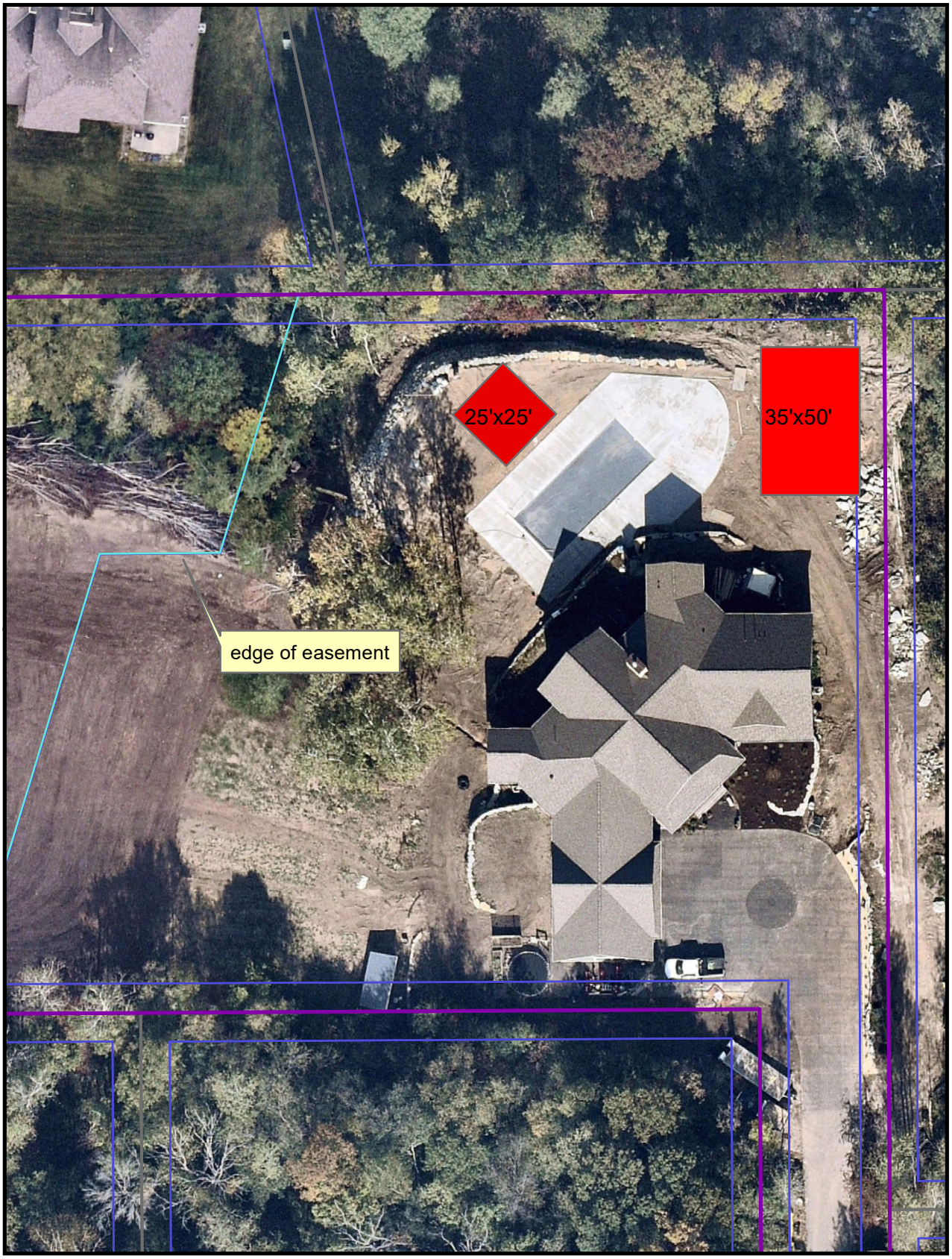

THIS DRAWING IS NEITHER A LEGALLY RECORDED MAP NOR A SURVEY AND IS NOT INTENDED TO BE USED AS ONE. THIS DRAWING IS A COMPILATION OF RECORDS, INFORMATION AND DATA LOCATED IN VARIOUS CITY, COUNTY AND STATE OFFICES AND OTHER SOURCES AND IS TO BE USED FOR REFERENCE PURPOSES ONLY. THE CITY OF INVER GROVE HEIGHTS IS NOT RESPONSIBLE FOR ANY INACCURACIES HEREIN CONTAINED
Map produced by the City of Inver Grove Heights GIS Dept.
Copyright© City of Inver Grove Heights 2020

N

Exhibit D

estimated area of accessory structures

Map not to scale

PLANNING REPORT
CITY OF INVER GROVE HEIGHTS

CASE NO.:	20-50Z
APPLICANT:	Swift Transportation Co. of Arizona, LLC
PROPERTY OWNER:	Swift Transportation
REQUEST:	Change the zoning from I-1, Limited Industry District to I-2, General Industry District
LOCATION:	11380 Courthouse Boulevard
HEARING DATE:	January 5, 2021
COMPREHENSIVE PLAN:	LI, Light Industrial
ZONING:	I-1, Limited Industry District
REVIEWING DIVISIONS:	Planning

PREPARED BY: Allan Hunting
City Planner

BACKGROUND

The applicant is proposing to rezone approximate 26 acre parcel from I-1, Limited Industry to I-2, General Industry. The applicant would like have the ability to use the property for service and repair of trucks and trailers for third party customers. Currently the site operates under a conditional use permit for a truck and freight terminal. Service and repair of third party trucks is not allowed in the I-1 District. No physical changes to the existing site are proposed at this time.

The applicant has applied only for a rezoning of the property noting the Comprehensive Plan recognizes similarities between the LI and GI districts. The City's historical practice has been the I-2 district follows the General Industrial comp plan category and I-1 district follows the Limited Industrial category. Staff consulted with the City Attorney to confirm our historical interpretation. The City Attorney agrees that with a request for rezoning from I-1 to I-2 must also include a comp plan amendment from LI to GI so there is consistency with zoning and land use designations. Therefore, a comprehensive plan amendment must also be reviewed with this request.

SURROUNDING USES

The subject property is surrounded by:

North	I-State Truck Center; zoned I-1; guided LI.
East	Mississippi River, DNR scenic and natural areas
West	Hwy 52/55, gravel pit; zoned I-2; guided GI
South	Travel plaza and truck repair, distribution center; zoned I-1; guided LI

EVALUATION OF REQUEST

Comprehensive Plan Amendment

The subject parcel is currently guided Light Industrial and defined in the 2040 Comprehensive Plan as follows:

> "Light Industrial areas in Inver Grove Heights include lots or parcels containing light manufacturing, goods movement and wholesales trade. Light Industrial parcels are located in a number of sites throughout the community with concentrations in the northeast and extreme southern portions of the city "

A comp plan change is required so the land use map and zoning map would be consistent.

General Industrial is defined in the 2040 Comprehensive Plan as:

> "The General Industrial category includes lots or parcels containing manufacturing, processing and disposal facilities. General Industrial parcels exist in only one area, southern Inver Grove Heights lying immediately west of Highway 52/55. The land use designated as general industrial on the future land use plan includes the Pine Bend Landfill."

This report lists other policies in the 2040 Comprehensive Plan that are relevant to the request:

One of the goals of both the Light Industrial and General Industrial districts is to "Provide opportunities for new industrial development, expansion of existing uses and the redevelopment of existing industrial uses to expand employment opportunities and to serve existing businesses in the community."

Existing surrounding uses. Along this stretch of highway on both sides land uses consist of truck freight and repair operations, gravel pits, manufacturing and warehousing. The properties to the north and south of the subject site both have third party truck repair operations that have occurred historically or allowed under past zoning ordinances. Both properties north and south are zoned I-1. The Swift property proposal would be to use this property the same as the abutting properties.

Rezoning Request. The applicant is requesting a rezoning to I-2 to allow the property to be used for service of semi-tanks, trucks and trailers (except prohibited by the fire code), including equipment, parts and tires. This use is a permitted use in the I-2 district.

The Zoning Ordinance defines the purpose of the I-1 District as

> "The I-1, limited industry district is intended for the continued operation of light manufacturing, warehousing, and wholesale businesses."

The Zoning Ordinance defines the purpose of the I-2 District as

> "The purpose of the I-2 general industry district is to provide for areas which, because of the availability to thoroughfares and railroads, suitable topography, and isolation from residential areas, are appropriate for industrial uses which are of a more intensive nature. The I-2 district also allows certain business uses necessary to complement general industrial uses."

The location and physical characteristics of the site lend itself to the I-2 district.

ALTERNATIVES

The Planning Commission has the following alternatives available for the proposed request:

A. Approval If the Planning Commission finds the application acceptable, the Commission should make the following recommendations:

- Approving the Comprehensive Plan Amendment from LI, Light Industrial to GI, General Industrial subject to the following conditions:

  1. The Metropolitan Council shall not require any significant modifications to the comprehensive plan amendment.

  2. The Metropolitan Council shall not make a finding that the comprehensive plan amendment has a substantial impact or contain a substantial departure from any metropolitan systems plan.

- Approving the Rezoning of the property from I-1, Limited Industry District to I-2, General Industry District.

B. Denial If the Planning Commission does not favor the comprehensive plan amendment, a recommendation of denial should be forwarded to the City Council. With a recommendation of denial, findings or the basis for the denial should be given.

RECOMMENDATION

Expanding the allowed uses for the property to allow for truck and trailer repair would be consistent with existing uses both north and south of the property. Staff would recommend approval of both the comp plan amendment and rezoning.

Attachments: Location Map
Existing/Proposed Comp Plan Map
Existing/Proposed Zoning Map
Applicant Narrative

CITY OF INVER GROVE HEIGHTS

Location Map
Case No. 20-50Z

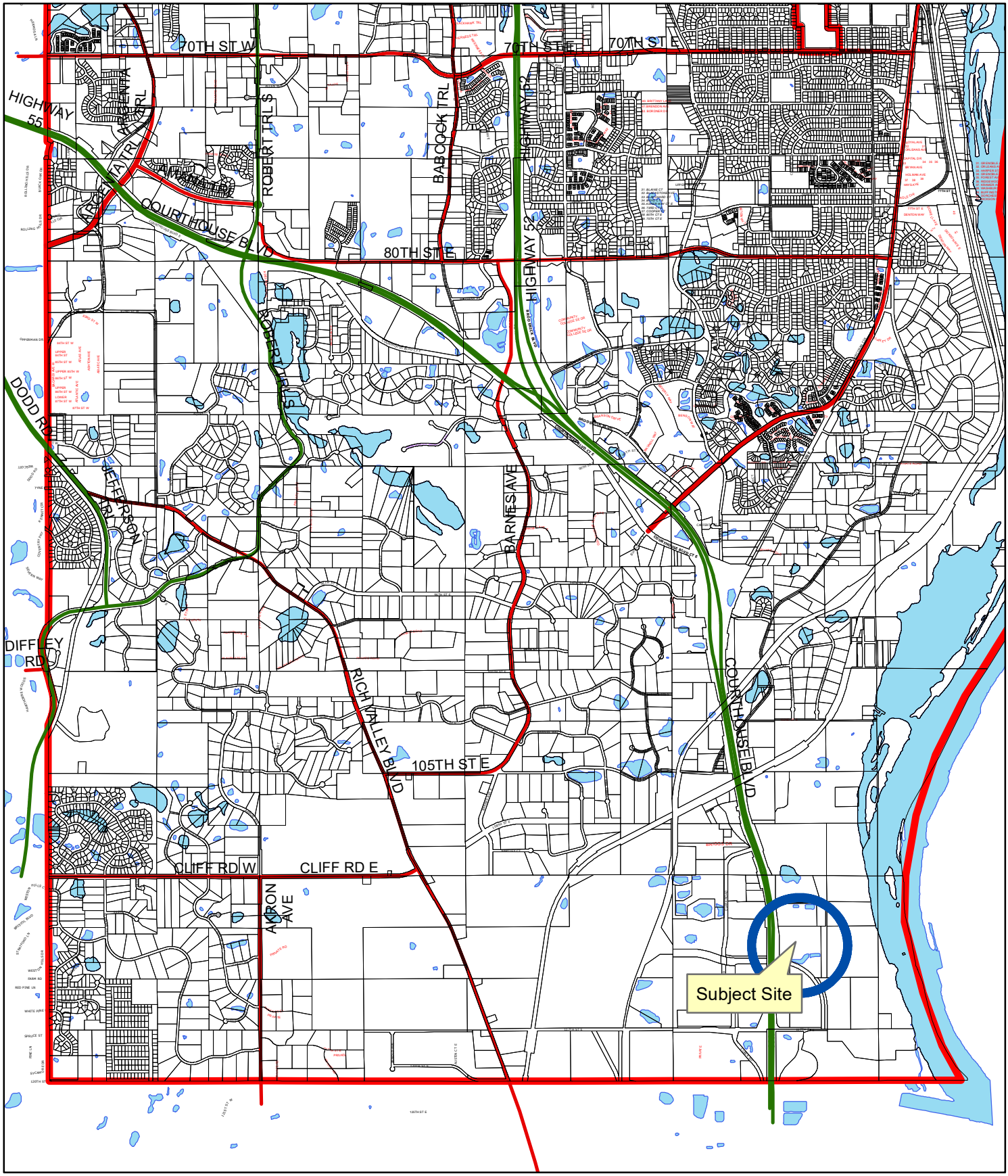

Comprehensive Plan Map
Case No. 20-50Z

Existing Land Use

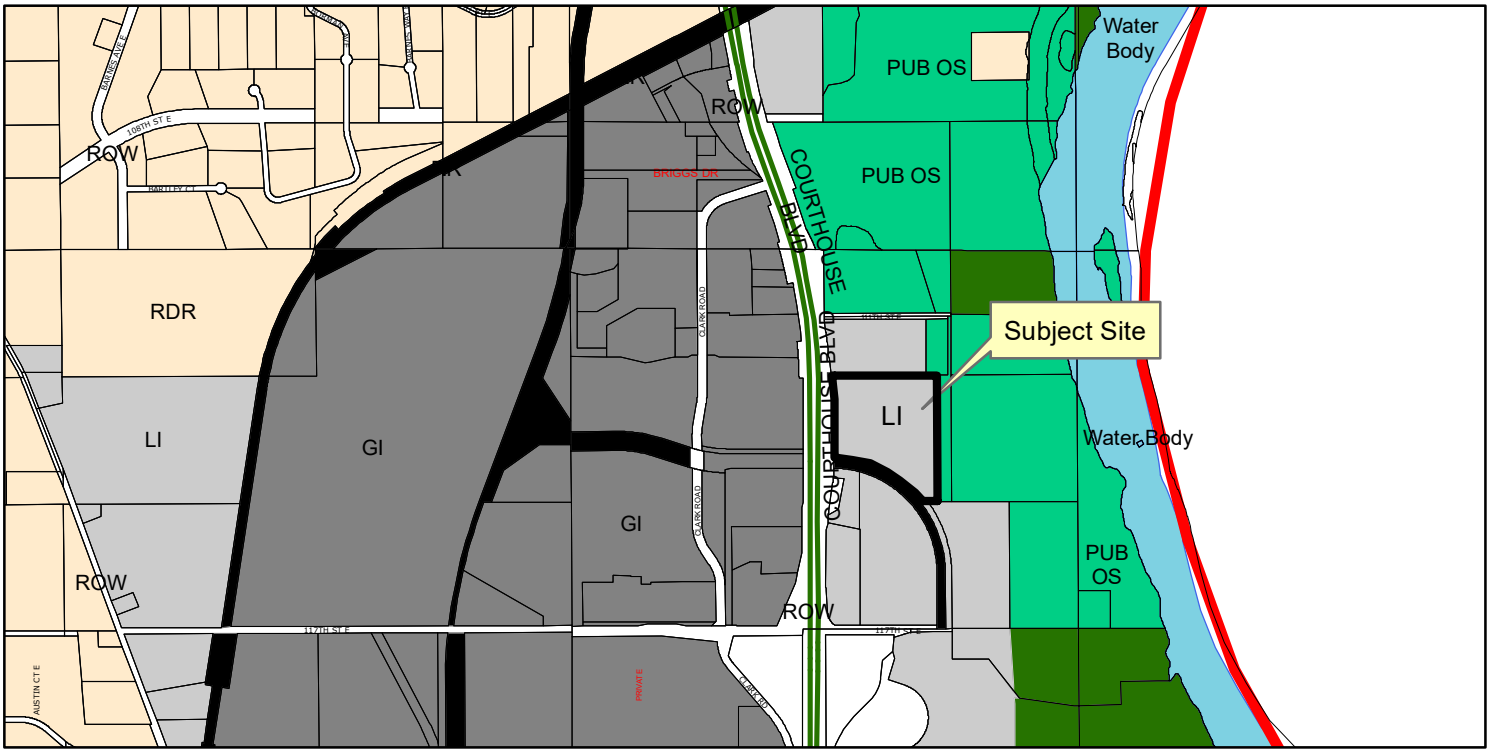

Proposed Land Use

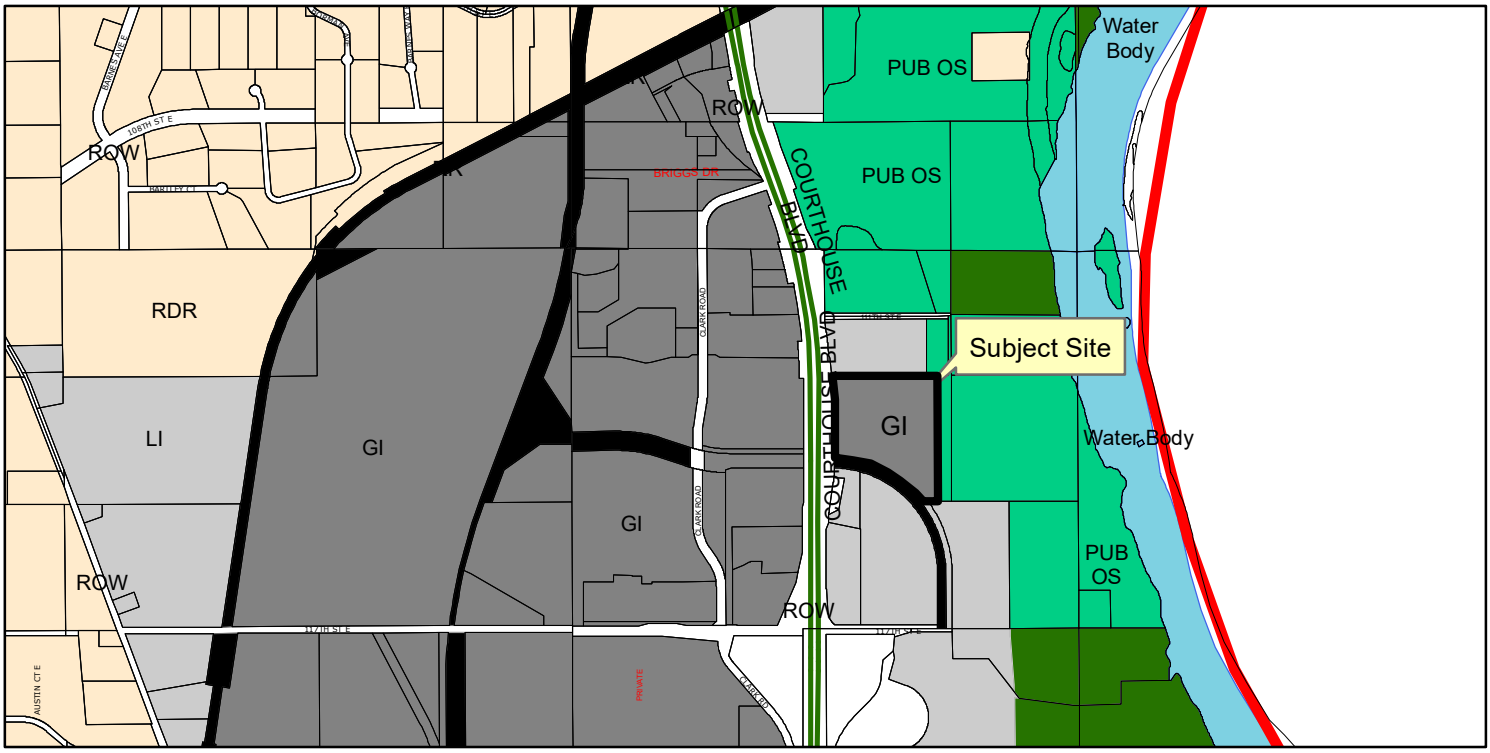

Zoning Map
Case No. 20-50Z

Existing Zoning

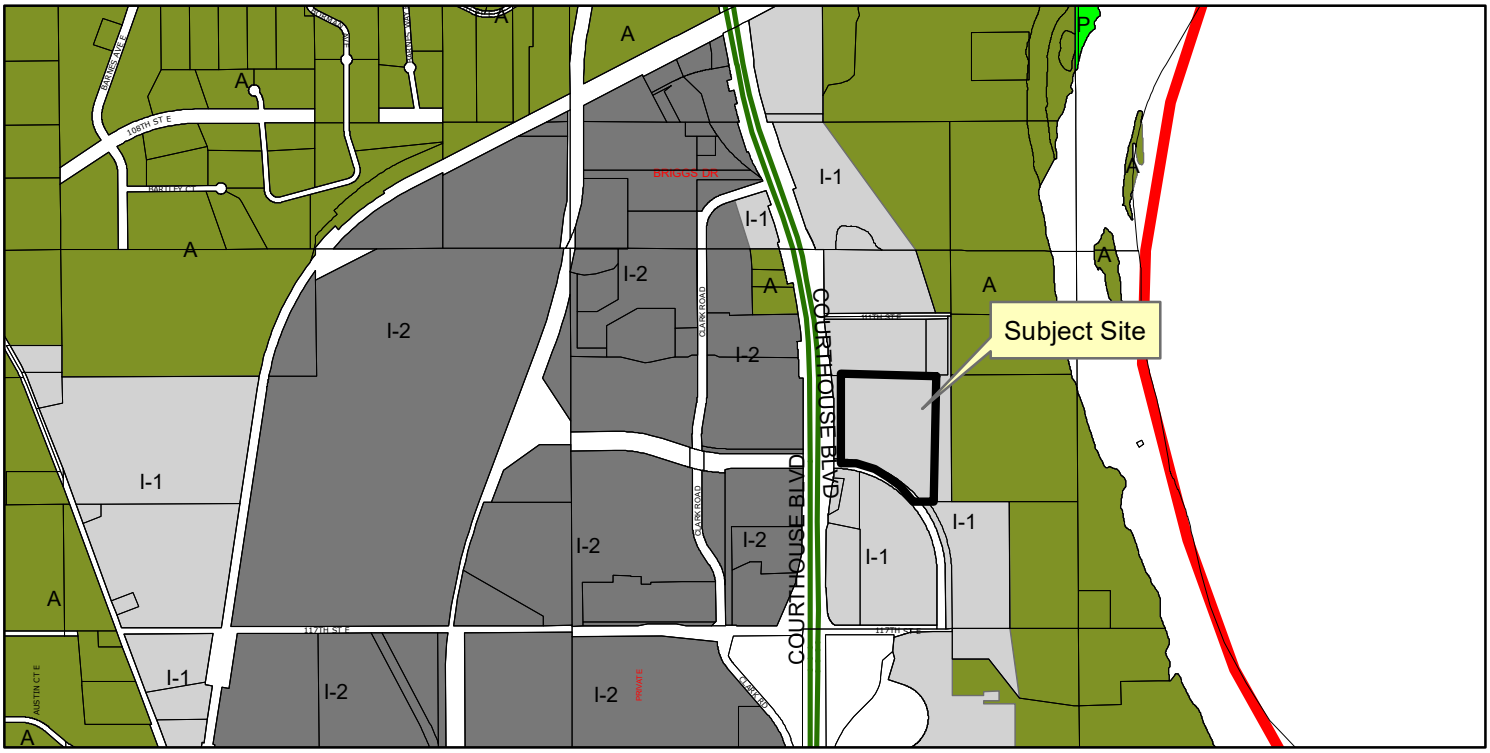

Proposed Zoning

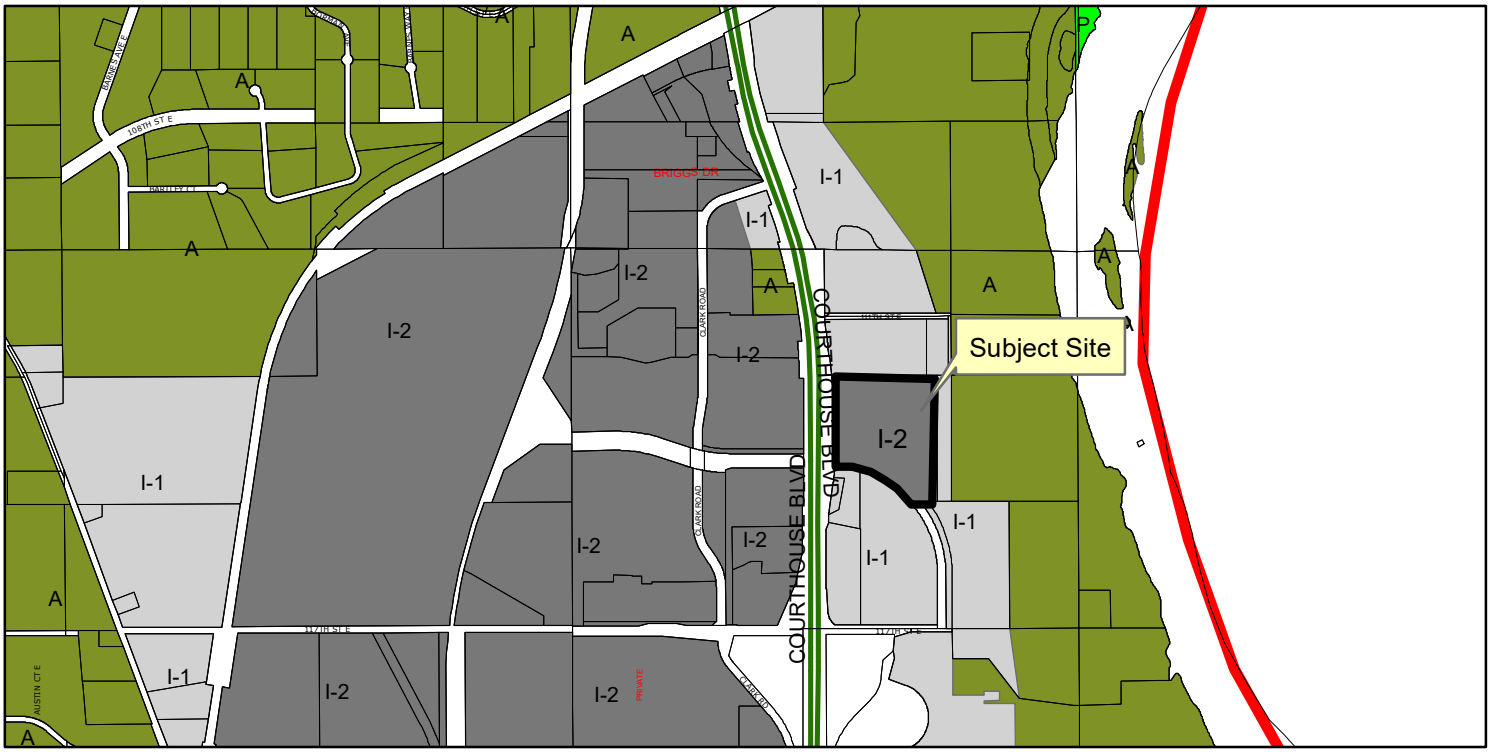

Larkin Hoffman
ATTORNEYS

Larkin Hoffman

8300 Norman Center Drive
Suite 1000
Minneapolis, Minnesota 55437-1060

GENERAL: 952-835-3800
FAX: 952-896-3333
WEB: www.larkinhoffman.com

November 30, 2020

Mr. Allan Hunting
City Planner
City of Inver Grove Heights
8150 Barbara Avenue
Inver Grove Heights, MN 55077

Re: Re-Zoning Application for 11380 Courthouse Boulevard

Dear Mr. Hunting

Attached to this letter please find the application of Swift Transportation Co. of Arizona, LLC ("Swift Transportation") for the rezoning of industrial property located at 11380 Courthouse Boulevard (the "Property") in Inver Grove Heights, Minnesota (the "City"). Swift Transportation is seeking to rezone the Property to General Industry ("I-2") in order be used, in part, as a service facility for industrial trucks and equipment.

The Rezoning Request is Consistent with the City Code & the Property's Surroundings

The Property is currently zoned Limited Industry ("I-1"). The Inver Grove Heights City Code ("City Code") states that the I-1 District is intended for "the continued operation of light manufacturing, warehousing, and wholesaling businesses." *City Code 10-11A-1*. This is consistent with how the Property has historically been used.

Swift Transportation wishes to use the Property to also service industrial trucks and equipment. The City Code provides that the "service of semi-tanks, trucks and trailers, including equipment, parts and tires" is permitted in the I-2 District. The City Code also states that the I-2 District is "to provide for areas which, because of the availability to thoroughfares and railroads, suitable topography, and isolation from residential areas, are appropriate for industrial uses which are of a more intense nature." *City Code 10-11C-1*. The Property is adjacent to U.S. Highway 52 and, like the numerous parcels on the opposite side of Highway 52 which are already zoned I-2, it has good access to thoroughfares and railroads and is well isolated from any residential areas. Therefore, the application to rezone the property I-2 is consistent with the City Code's description of the intended uses of the I-1 and I-2 Districts and also in alignment with the geographic location of the Property and the uses of surrounding parcels.

The Rezoning Request is Consistent with the City's Comprehensive Plan

State law requires cities to zone properties to conform with their comprehensive plans. *Minn. Stat. § 394.21.* The City Code provides that a "property owner or representative of the property owner may request…rezoning if it applies to his or her property." *City Code § 19.13.* The Property is currently guided Light Industrial.

While the City's 2040 Comprehensive Plan ("Comp Plan") does make a distinction between parcels designated Light Industrial and those designated General Industrial, it expressly recognizes an overlap between, suggesting there are uses and zoning districts that are appropriate under either designation. Specifically, the Comp Plan states that "because of the similarities between the light industrial and general industrial land use categories, policies are combined for both uses." It subsequently outlines the following policies: *Comp. Plan 2-41.* Further, it outlines the following policies to be applied to both designations:

1. Provide opportunities for new industrial development, expansion of existing uses and the redevelopment of existing industrial uses to expand employment opportunities and to serve existing businesses in the community.

2. Improve the appearance of existing industrial areas and minimize adverse impacts on the community's image and development potential.

3. Ensure adequate public facilities and infrastructure systems to serve future development and redevelopment of the area.

4. Improve existing industrial areas over time using redevelopment tools and possibly financial incentives, particularly in areas that are highly visible from adjacent roadways.

5. Enact standards for new industrial developments that are in keeping with the need to improve the overall appearance of the community.

6. Require landscaped buffers between dissimilar land uses to enhance compatibility. *Id.*

Swift Transportation's application to rezone the Property to I-2 is consistent with the Comp Plan as it would allow for the "the redevelopment of existing industrial uses to expand employment opportunities" (Goal #1). Further, expanded use allowed by the rezoning would support Swift Transportation's continued investment in the operation, maintenance, and upkeep of a visible industrial property in a way that would further Goal #2 and Goal #4.

Therefore, having reviewed the current zoning designation as well as the contemplated use of the Property proposed by Swift Transportation, the request to rezone the Property to I-2 is consistent with the City Code and City's 2040 Comp Plan. Further, it is consistent with the way neighboring properties are currently utilized. By rezoning the Property as proposed, Swift Transportation will be able update and expand its use of the Property in a manner consistent with neighboring land uses.

We look forward to City consideration of this application on behalf of Swift Transportation. Please call me if you have questions about the submission.

Sincerely,

Peter J. Coyle, for
Larkin Hoffman

Direct Dial: (952) 896-3214
Direct Fax: (952) 841-1704
Email: pcoyle@larkinhoffman.com

cc: Sylvia Bejarano, Swift Transportation

Enclosure

4827-6269-3075, v. 1

P L A N N I N G R E P O R T
CITY OF INVER GROVE HEIGHTS

CASE NO: 20-53SC

APPLICANT: United Properties

REQUEST: Preliminary and Final Plat for 2- lot subdivision 1 and Conditional Use Permit for Manufacturing for Lot 1

HEARING DATE: January 5, 2021

LOCATION: Courthouse Boulevard Court, west of Barnes Avenue

COMPREHENSIVE PLAN: Industrial Office Park

ZONING: IOP, Industrial Office Park

REVIEWING DIVISIONS: Planning
Engineering

PREPARED BY: Allan Hunting
City Planner

BACKGROUND

United Properties has submitted a preliminary and final plat for building #3 of the original Inverpoint Business Park. The plat consists of replatting Lot 1, Inverpoint Business Park into two lots, 1 and 2. The building will be 107,738 square feet in size and be used for a mix of office, warehousing and manufacturing.

In 2007, Council approved the PUD of Inverpoint Business Park which consisted of a three lot, five building project. A final PUD was approved for the center two buildings in 2008 (building #3). In 2019, an amendment was approved to the PUD changing the allowed hours of operation for some aspects of the overall functioning of the businesses. The developer is now ready to construct the second building of the five building complex.

EVALUATION OF THE REQUEST

Preliminary and Final Plat. The applicant is proposing to replat Lot 1 from the original plat into two lots which each will contain one of the approved buildings. The lots comply with size standards. Cross access easements will be required with the replatting since all utilities, parking and access are shared. These will be addressed in the development agreements.

Original PUD Conditions of Approval
The final plan review is limited to a review of the plans against the preliminary plat conditions of approval for compliance. The review will address each of the 37 conditions. A copy of the resolution approving the preliminary plans, including the conditions is attached.

Condition #1 relating to consistency with preliminary plans. The submitted final plans are consistent with the preliminary plans approved by Council. Grading and utilities have already been installed on the site. The turn lane improvements in Courthouse Boulevard are in place.

Condition #2 relating to lots on the final plat. A replatting of the lot is part of this request.

Condition #3 relating to approval of the final grading, drainage and erosion control plans. This was satisfied with the 2008 approval.

Condition #4 relating to drainage and utility easements provided on the plat. This condition was satisfied with the 2008 approval. All easements shown on the original plat are carried over to this plat.

Condition #5 relating to ownership of natural area/open space. All of the natural area/open space shown on the 2008 plan are in private ownership. The conservation easements were established with the original plat.

Condition #6 relating to future pedestrian/biking trail. The Council approved the plans such that the City may install a trail on the south side of Courthouse Boulevard within one year after the first 200,000 square feet of the project has been occupied. The Council will make that determination at that time.

Condition #7 relating to rooftop and ground mounted equipment being screened. This condition will be reviewed at building permit. The exterior of the buildings has been updated with current color schemes and details. They are consistent with the original elements approved in 2008.

Condition #8 relating to park dedication. Park dedication will consist of a cash payment for the newly created lot. The tabulation of fees based on lot area will be stated in the development contract. The park dedication fees are collected at time of final plat release.

Condition # 9 relating to parking lot and building lighting being downcast. The developer has submitted lighting plans showing the fixture type for the parking lots and the illumination pattern. The fixtures would be the same as what is on the new building and parking lot. The illumination pattern also complies with maximum light illumination at centerlines of adjacent streets.

Condition #10 relating to plans reviewed by the Fire Marshall. The Fire Marshall has reviewed the plans and has no issues with the layout and access. The three access points provide very good emergency vehicle access.

Condition #11 relating to MnDOT Review. Comments were addressed with the 2008 plans

Condition #12 relating to utility plan modification. The required changes were addressed with the 2008 plans. The main trunk utilities have already been installed.

Condition #13 relating to issues listed in Emmons and Olivier memo of 9/13/07. Comments were addressed with 2008 plans.

Condition #14 relating to storm water facilities maintenance agreement and responsibilities. All of these agreements were approved with the 2008 plans. There will be some modifications with this plan set. The City Council will be approving a revised development agreement and any other documents with the final plat and PUD plans.

Condition #15 relating to entering into a boulevard maintenance agreement. Satisfied with the 2008 plans.

Condition #16 relating to executing a conservation easement over plat. Satisfied with the 2008 plans. Required Conservation easements over the entire plat were recorded in 2008.

Condition #17 relating to payment of plat utility fees. Plat utility fees will be calculated and listed in the development agreement. Fees are collected at time of final plat release.

Condition #18 relating to acknowledgment of future city approvals. This condition was drafted by the City Attorney to clarify in all developments in the Northwest Area what changes require administrative or Council review. This language will be carried over into the development contract.

Condition # 19 relating to acknowledgement of PUD zoning. This condition was drafted by the City Attorney to indicate an acknowledgement will be recorded with the County for each development indicating the zoning and regulations placed on the property. It puts on record for any future landowners that there are special regulations on the property. This same type of notification was used in Arbor Pointe.

Condition #20 relating to entering into a development contract. This process has begun. A development contract will be drafted and reviewed by the City Council during their review of the final plan set.

Condition #21 relating to conditions of building occupancy. Since the project will be done in phases, this condition was added to clarify that all parking lot and entrance road improvements needed for each building will be constructed before occupancy is allowed.

Condition #22 relating to recording of documents. A standard condition notifying all parties of what documents must be recorded with the final plat. The City Attorney's office will work with the developer and city staff to ensure all documents are recorded.

Condition #23 relating to construction of sewer and water lines. All of these improvements have already been constructed.

Condition #24 relating to pervious pavement for parking stalls. The preliminary condition of approval stated at least 33 parking spaces had to be constructed with pervious pavement and the balance of the 121 proof of parking spaces shall all be constructed with pervious pavement. This phase does not require any pervious pavement.

Condition #25 relating to a modification of the landscape plan. The changes to the plan were addressed in the 2008 plans.

Condition #26 relating to City construction of the three right turn lanes from Courthouse Boulevard Court. All of the turn lanes have already been constructed.

Condition #27 relating to construction of the right turn lane for southbound Barnes at Courthouse Boulevard. All of the required improvements at the Barnes Avenue/Courthouse Blvd intersection have been installed.

Condition #28 relating to signage for trucks at the three exit points. The developer has installed some signage and will be installing additional signage directing trucks to use the eastern most entrance as the sole entrance and exit for the site for trucks.

Conditions #29, 30, 31 relating to truck/trailer idling, truck deliveries and business hours. In August 2019, the Council changed the allowed hours of operation and allowed times for truck deliveries and idling. These conditions are carried over in the development contract. Signage will be placed on the property to note the idling restrictions.

Condition #32 relating to restoration of Courthouse Boulevard Court. This condition related to the assessment to the property for the resurfacing of Courthouse Boulevard that occurred in 2007 or 2008.

Condition #33 relating to payment of all fees and escrows incurred by the city during the review process. The intent of this condition is to let the developer know of their financial responsibility of payment of fees. The development contract will also address this issue and state all outstanding fees must be paid prior to release of the final plat.

Condition #34 relating to prohibited uses. The conditions of approval restrict the use of the property to prohibit shipping operations or truck terminals. The language of the original condition was modified with the 2019 amendment. This condition will be carried over into the final PUD approval and also in the development contract.

Condition #35 relating to conditions and recommendations of SRF memo. The improvements suggested by SRF were addressed on the final plans in 2008 and have been completed.

Condition #36 relating to design of the entrance/exits to the site. The final site plan shows the entrance geometrics, so the entrances are designed for a right-in turn and not designed for a left turn out of the site.

Condition #37 relating to wetland mitigation. Council approved a wetland mitigation plan in 2008 and wetland mitigation was constructed.

Conditional Use Permit Review

The applicant is constructing the building as a spec building, meaning there is not a current tenant proposed. The applicant has indicated they intend to lease space to uses similar to the user in the current building which has a manufacturing component. The applicant is requesting a conditional use permit for manufacturing for the entire building so they will have more flexibility to lease to users. It is estimated that approximately 15 percent of the building would be used for manufacturing. The IOP, Industrial Office Park District identifies manufacturing as a conditional use. Therefore , the applicant has applied for a conditional use permit and a review is provided below.

The Fire Marshal has raised some concerns with allowing a CUP approval before users are known. He suggested adding a condition that the allowed CUP uses be the same as allowed in the I-1 district and any use containing hazardous materials be consistent with fire and building codes.

This section reviews the plans against the CUP criteria in the Zoning Ordinance (Section 10-3A).

1. *The use is consistent with the goals, policies and plans of the City Comprehensive Plan, including future land uses, utilities, streets and parks.*

   The use is consistent with the goals, policies, and plans of the Comprehensive Plan. All utilities and streets are in place.

2. *The use is consistent with the City Code, especially the Zoning Ordinance and the intent of the specific Zoning District in which the use is located.*

   Manufacturing is a conditional use in the IOP district and would be consistent with the zoning. Adding the Fire Marshal's condition would make the use more consistent with intent of the IOP district and not an I-2 district.

3. *The use would not be materially injurious to existing or planned properties or improvements in the vicinity.*

   Manufacturing located within these type of office parks are typically smaller scale and low impact. These are not the sole use of the property.

4. *The use does not have an undue adverse impact on existing or planned City facilities and services, including streets, utilities, parks, police and fire, and the reasonable ability of the City to provide such services in an orderly, timely manner.*

The proposed improvements do not appear to have any negative effects on City facilities or services. Fire, and Inspection Departments would review and approve any interior remodel building permits for code compliance.

5. *The use is generally compatible with existing and future uses of surrounding properties, including:*
   i. Aesthetics/exterior appearance
   Would be all contained within the building. No outdoor storage is allowed in the IOP district.
   ii. Noise
   The proposed use at its small scale would not be expected to generate noise beyond that of the site as a whole with office/warehousing truck operations.
   iii. Fencing, landscaping and buffering
   No exterior changes proposed.

6. *The property is appropriate for the use considering: size and shape; topography, vegetation, and other natural and physical features; access, traffic volumes and flows; utilities; parking; setbacks; lot coverage and other zoning requirements; emergency access, fire lanes, hydrants, and other fire and building code requirements.*

   The site and building are designed with ample parking and the use would not create any traffic or access issues.

7. *The use does not have an undue adverse impact on the public health, safety or welfare.*

   This use does not appear to have any negative effects on the public health, safety or welfare.

8. *The use does not have an undue adverse impact on the environment, including, but not limited to, surface water, groundwater and air quality.*

   This use would not have an undue adverse impact on the environment. All operations would be contained in the new building.

ALTERNATIVES

A. Approval. If the Planning Commission finds the proposed request acceptable, the Commission should make the following recommendations:

- Approving the Preliminary/Final plat for Inverpointe Business Park Second Addition subject to the following conditions:

1. The project shall be developed in substantial conformance with the following plans on file with the Planning Department except as may be modified by the conditions below:

Elevation Plan	dated 12/7/20
Final Plat	
Site Plan (2 sheets)	dated 12/7/20
Erosion Control Plan (2 sheets)	dated 12/7/20
Grading and Utility Plan (2 sheets)	dated 12/7/20
Landscape Plan (2 sheets)	dated 12/7/20
Lighting Plan (2 sheets)	dated 12/21/20

***The final list of approved plans and date of plans shall be identified in the development contract.**

2. Development of the site shall also be regulated by the preliminary plat/PUD conditions of approval in Resolution #08-39 and as amended in Resolution #19-147.

3. Prior to any work commencing on the site, the developer shall enter into a development contract with the City. The development contract will address all other preliminary conditions of approval relating to other agreements required, park dedication, and other pertinent specific performance standards for this PUD.

3. The Developer shall post the three entrance/exit points with signage that directs vehicles to make left turns only as they exist the site. In addition, signage shall be posted by the Developer designating the east entrance as the exclusive entrance for all semi-truck traffic. Signs prohibiting semi-truck use of the other two entrances shall also be posted by the Developer, with the signs being subject to review and approval by the City Public Works department.

4. Between the hours of 10:00 p.m. and 6:00 a.m., trucks and trailers shall not be allowed to idle their engines on the property and trucks and trailers shall not be allowed to stop or park on the property with engines, air-conditioning units or refrigeration units running except for a fifteen (15) minute interval when initially arriving and parking at the parking lots or docks. The word "truck" shall have the same meaning as defined in Minnesota Stat. 169.03, subd. 49; *i.e.* a truck means every motor vehicle designed, used or maintained primarily for the transportation of property. The Owner or tenant on the property shall post signage that states such restrictions. The Owner of the property is responsible to enforce such restrictions.

5. Between the hours of 10:00 p.m. and 6:00 a.m., there shall be no deliveries by trucks and trailers and there shall be no loading or unloading of trucks and trailers. The word "truck" shall have the same meaning as defined in Minnesota Stat. 169.03,

subd. 49; *i.e.* a truck means every motor vehicle designed, used or maintained primarily for the transportation of property. The Owner or tenant on the property shall post signage stating that no deliveries by truck will be accepted or will occur and that no loading or unloading will occur between the hours of 10:00 p.m. and 6:00 a.m. The Owner of the property is responsible to enforce such restrictions.

6. No truck terminals, as defined as a specialized distribution building for redistributing goods from one truck to another, serving an intermediate transfer point, and used primarily for staging loads (rather than long-term storage), shall be allowed to operate from the property.

o Approving the Conditional Use Permit for Lot 1, Inverpoint Business Park Second Addition, subject to the following conditions:

1. Development of the site shall also be regulated by the preliminary plat/PUD conditions of approval in Resolution #08-39 and as amended in Resolution #19-147.

2. Allowed CUP uses to be the same as allowed in the I-1 district and any use containing hazardous materials be consistent with fire and building codes.

B. **Denial.** If the Planning Commission does not find the application to be acceptable, a recommendation of denial should be made. Specific findings supporting a basis for denial must be stated by the Commission if such a recommendation is made.

RECOMMENDATION

Based on this review, the Planning Division recommends approval of the preliminary/final plat and conditional use permit for Lot 1, Inverpoint Business Park Second Addition subject to the conditions stated above.

ATTACHMENTS:

Location Map
Preliminary PUD conditions of approval and site plan
Project Narrative
Final Plat
Elevation Plan
Site Plan
Erosion Control Plan
Grading and Utility Plan
Landscape Plan
Lighting Plan

Location Map
Case No. 20-53SC

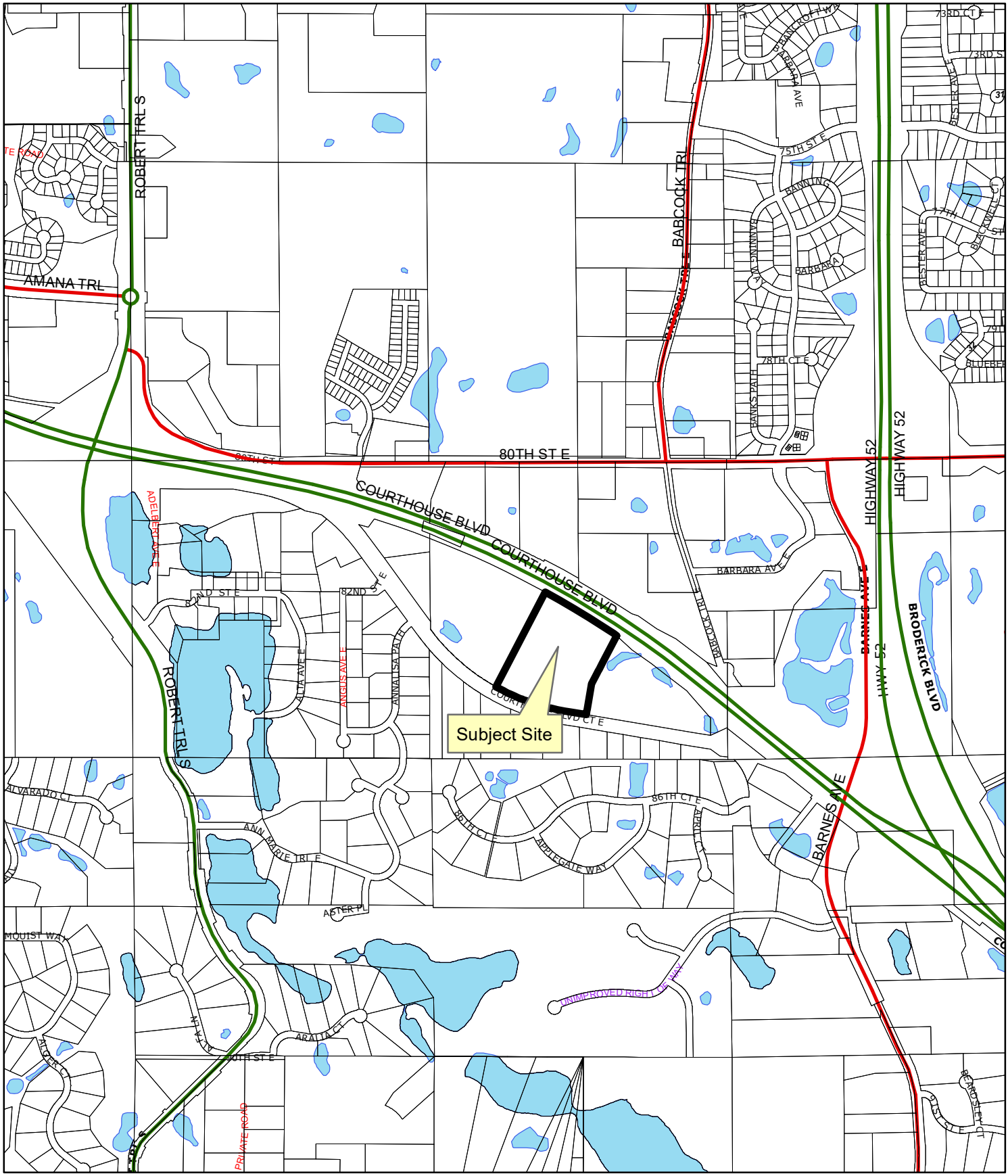

2/23/08

CITY OF INVER GROVE HEIGHTS
DAKOTA COUNTY, MINNESOTA

RESOLUTION NO. 08-39

A RESOLUTION APPROVING A PRELIMINARY PLAT AND PRELIMINARY PUD DEVELOPMENT PLAN FOR A THREE (3) LOT SUBDIVISION AND A FIVE (5) BUILDING 470,620 SQUARE FOOT OFFICE/WAREHOUSE DEVELOPMENT

CASE NO. 07-33PUD
(United Properties)

WHEREAS, a preliminary plat and preliminary PUD development plan application has been submitted to the City for property by Inverwood Business Park, LLC (hereinafter the Developer and/or Owner) legally described as;

SEE EXHIBIT A
(hereinafter the Property)

WHEREAS, the City Council adopted Ordinance #1150 on May 29, 2007 that enacted regulations for a new zoning district entitled Industrial Office Park District;

WHEREAS, the Developer/Owner has made application as the developer of the proposed project and the owner of the Property;

WHEREAS, the subject property shall be governed by and the uses allowed shall be consistent with the Industrial Office Park District zoning regulations;

WHEREAS, a public hearing concerning the preliminary plat and preliminary PUD development plan was held before the Inver Grove Heights Planning Commission in accordance with Minnesota Statues, Section 462.357, Subdivision 3 on August 21 and September 18, 2007;

NOW, THEREFORE BE IT RESOLVED BY THE CITY COUNCIL OF INVER GROVE HEIGHTS THAT, the Preliminary Plat and Preliminary PUD development plan for a three (3) lot and a five (5) building 470,620 square foot office/warehouse development is hereby approved subject to the following conditions:

1. The final plat and accompanying site plans shall substantially conform with the Preliminary Site Plan attached to this Resolution (hereafter Site Plan), subject to the approval of the Plans set forth below, modifications thereto and plans listed below to be filed(**), by the City's Engineering and Planning Departments to assure compliance and consistency with the Site Plan and applicable City and other regulations and ordinances, and all subject to modifications as set forth by the conditions in this Resolution.

Preliminary Plat	dated 9/6/07
Preliminary Overall Civil Site Plan	dated **
Preliminary Civil Site Plan (West)	dated **
Preliminary Civil Site Plan (East)	dated **
Preliminary Grading and Drainage Plan	dated 9/6/07
Preliminary Grading and Drainage Plan (West)	dated 9/6/07
Preliminary Grading and Drainage Plan (East)	dated 9/6/07
Preliminary Overall Utility Plan	dated 9/6/07
Preliminary Utility Plan (West)	dated 9/6/07
Preliminary Utility Plan (East)	dated 9/6/07
Preliminary Landscape Plan	dated 9/6/07
Preliminary Landscape Plan (West)	dated 9/6/07
Preliminary Landscape Plan (East)	dated 9/6/07
Preliminary Tree Inventory and Preservation Plan	dated 9/6/07
Stormwater Pollution Prevention Plan	dated 9/6/07
Survey of Right-of-way Vacation	dated 4/23/07
Building Elevations	dated 6/18/07

2. Lots 1 and 3 shown on the preliminary plat shall be outlots on the final plat.

3. Prior to final plat and plan approval, the final grading, drainage and erosion control, and utility plans shall be approved by the Director of Public Works.

4. Drainage and utility easements shall be provided on the final plat as required by the Director of Public Works.

5. The ownership of all of the natural area/open space shall be privately owned by the property owner.

6. The City may install a pedestrian/biking trail along the south-side of Courthouse Boulevard Court (hereinafter Trail Improvement) within one year of the issuance of certificates of occupancy for the first 200,000 square feet of the Project. The location, size and design of the Trail Improvement shall be within the discretion of the City. In the event such Trail Improvement is installed, the Developer agrees that the cost of the Trail Improvement shall be specially assessed against the Property in equal installments over 10 years. The interest shall be the rate then being charged by the City for similar assessment projects at the time of assessment against the Property. The Developer shall sign, or cause to be signed, all necessary documents presented by the City to waive its rights to a hearing and appeal or any other challenge to the assessments, either as to amount or the assessment process, in substantially the form attached hereto as Exhibit B. For purposes of waiver of its rights to appeal and pursuant to Minn. Stat. § 462.3531, the estimated cost of the Trail Improvements shall be no greater than $ 175,000.

7. All rooftop equipment shall be completely screened from view from the public streets. Screening materials shall be compatible with the building's overall design. If the mechanical equipment is found to be visible after construction, the applicant shall provide screening subject to City approval.

8. Park dedication shall consist of a cash contribution in the amount of the rates in effect at the time the final plat is approved.

9. All parking lot and building lighting on site shall be a down cast "shoe-box" style and the bulb shall not be visible from property lines. The design of the fixtures shall be subject to further staff review prior to final plan approval.

10. All plans shall be subject to the review and approval of the Fire Marshal.

11. The approval of the preliminary Plat is subject to the review and comment from MnDOT.

12. The utility plans shall be modified to reflect; 1) the location of the western trunk water main crossing under Hwy 55 being shifted to the east, 2) the trunk water main traversing the development being brought out to Courthouse Boulevard Court (most likely at the west driveway), 3) the trunk sanitary sewer traversing the development being brought out to Courthouse Boulevard Court (most likely at the west driveway).

13. The preliminary plans shall be modified to address all four (4) issues listed in the Emmons and Olivier report dated September 13, 2007.

14. Prior to execution of the plat by the City and prior to recording of the plat with the County, the Owner shall execute a Storm Water Facilities Maintenance Agreement with the City whereby the Owner of Lots 1-3, Block 1 shall be responsible for the maintenance of storm water improvements on such lots and other lots on the south-side of Courthouse Boulevard Court used for wetland mitigation, storm water or water retention purpose.

    The Agreement shall provide that the following storm water improvements shall be maintained by the following entities; in instances where the City is not responsible for maintenance of the storm water improvements, the City shall nonetheless have the right to repair, maintain and replace the improvements if the responsible party does not fulfill its responsibility and the City shall have the right to charge the costs to the responsible party and impose the charges on the property if the responsible party fails to pay the costs.

Type of Storm Water Improvement	Location of Storm Water Improvement	Responsible Party
Regional Basins	East and West ends	City of IGH

Infiltration/ Bio-retention Basins	Throughout Project	Landowner/Developer
Wetland Mitigation	Throughout Project	Landowner/Developer
Rain Gardens	Throughout Project	Landowner/Developer

15. Prior to execution of the plat by the City and prior to recording of the plat with the County, the Owner shall execute a Boulevard Maintenance Agreement with the City whereby the owner of Lots 1-3, Block 1 shall be responsible for the maintenance of boulevard improvements on such lots; the City shall nonetheless have the right to repair, maintain and replace the improvements if the responsible party does not fulfill its responsibility and the City shall have the right to charge the costs to the responsible party and impose the charges on the property if the responsible party fails to pay the costs.

16. Prior to execution of the plat by the City and prior to recording of the plat with the County, the Owner shall execute a Conservation and Open Space Easement over portions of Lots 1-3, Block 1. The easement shall provide that the area must be retained in a natural and scenic state with no removal of vegetation and no mowing of the vegetation except to the extent identified in the easement. The vegetation management practices, such as vegetation removal and vegetation mowing, shall be subject to approval of the City's Planning Department before the final plat. The easement shall be in favor of the City and enforceable by the City. Implementation of the vegetation management plan shall be the responsibility of landowner. In instances where the City is not responsible for maintenance, the City shall nonetheless have the right to maintain the Conservation and Open Space Easement if the responsible party does not fulfill its responsibility and the City shall have the right to charge the costs to the responsible party and impose the charges on identified property in the plat if the responsible party fails to pay the costs.

17. Prior to execution of the plat by the City and prior to recording of the plat with the County, the Developer must pay the City the following plat connection fees:

IGH Code Provision	Type of Fee	Amount of Fee
1010.03, Subd. 5	Plat Connection Fee Water Utility System	$ 48,292.40
1010.03, Subd. 6	Plat Connection Fee Sanitary Sewer Utility System	$ 73,743.80
1010.03, Subd. 7	Plat Connection Fee Storm Water Sewer Utility System	$ 357,036.45

In the Development Contract, the Developer and Owner shall acknowledge that at the time the building permits are obtained additional connection fees for the water utility system and sanitary sewer utility system are due and owing.

18. In the Development Contract, the Developer and Owner shall agree that the following elements of the Planned Unit Development shall not be altered, changed or removed without first obtaining the following consents:

Site Plan Element	Consent Required By
Building Location	City Council
Driveways and Private Roads	City Council
Landscaping	Planning Department
Location of Utilities	Engineering Department
Location of Conservation Easement and Open Space	City Council
Parking Areas	City Council

19. The Developer and Owner shall execute an Acknowledgement of Planned Unit Development Zoning. This Acknowledgement shall state that property within the plat is subject to the approved PUD plans and PUD zoning and that the development on the property must conform to the PUD plans and PUD zoning. This Acknowledgement shall be recorded when the plat is recorded.

20. The Developer and Owner shall enter into a Development Contract with the City. The form of Development Contract shall substantially comply with the model Development Contract which is part of the Administrative Code, taking into account the particular requirements of the Planned Unit Development plans.

21. The Development Contract shall provide that parking lots associated with specific buildings are completed before a Certificate of Occupancy is issued.

22. The following documents shall be recorded when the plat is recorded:
    - Development Contract;
    - Storm Water Facilities Maintenance Agreement;
    - Conservation Open Space Easement; and
    - Acknowledgement of PUD Zoning.
    - Waivers of Assessment Appeals

23. The City is in the process of planning or constructing sanitary sewer and water trunk lines to provide trunk service for the platted area. The Developer is responsible for constructing the lateral lines and the service lines. The Development Contract shall provide that the Developer and Owner release and hold the City harmless from any claim resulting from the delay in completing construction of the City trunk utility lines.

24. At least 33 parking stalls shall be required to be constructed of pervious pavement based on 620 parking stalls being constructed. The balance of the 121 proof of parking stalls are required to be constructed of pervious pavement.

25. The landscape plan shall be modified to relocate the boulevard row of trees to meet the required five foot setback from the front property line.

26. Right turn lanes shall be constructed for all three entries into the site from Courthouse Boulevard Court. The City shall construct the right turn lanes as a special assessment project and shall use its best efforts to complete the work in 2008 and shall assess 100% of the cost to the Property and the Owner. The Developer and Owner shall waive its rights to appeal from the assessment by signing, or causing to be signed, all necessary documents as presented by the City to waive its rights to hearing and appeal or in any manner challenge the assessments, either as to amount or the assessment process, in substantially the form attached hereto as Exhibit B. Four purposes of the waiver of the rights to appeal pursuant to the requirements of Minn. Stat. 462.3531, the estimated cost of the project shall be the cost of the Feasibility Report prepared by the a consulting engineer, chosen by the City, plus the costs of the project as estimated by the Feasibility Report, plus typical contingencies for such a project, plus the legal, administrative, engineering, financial contingencies and fiscal costs estimated by the City for the project; if the project is delayed until 2009 then the estimated amount of the total project costs for purposes of the waiver shall be increased to reflect increased additional costs. The design of the turn lanes shall be subject to the recommendation of the Director of Public Works.

27. The Developer and Owner shall be responsible for the financial obligation to complete a right turn lane for southbound traffic on Barnes Avenue at Courthouse Boulevard Court. The right turn lane shall be constructed by the City which shall use its best efforts to complete the same in 2008 as a special assessment project with 100% of the cost assessed against the Owner and the Property. The Developer and Owner shall waive its rights to appeal from the assessment by signing, or causing to be signed, all necessary documents as presented by the City to waive its rights to hearing and appeal or in any manner challenge the assessments, either as to amount or the assessment process, in substantially the form attached hereto as Exhibit B. Four purposes of the waiver of the rights to appeal pursuant to the requirements of Minn. Stat. 462.3531, the estimated cost of the project shall be the cost of the Feasibility Report prepared by the a consulting engineer, chosen by the City, plus the costs of the project as estimated by the Feasibility Report, plus typical contingencies for such a project, plus the legal, administrative, engineering, financial contingencies and fiscal costs estimated by the City for the project; if the project is delayed until 2009 then the estimated amount of the total project costs for purposes of the waiver shall be increased to reflect increased additional costs. The design of the right turn lane will be subject to the recommendation of the of the Director of Public Works.

28. The Developer shall post the three entrance/exit points with signage that directs vehicles to make left turns only as they exist the site. In addition, signage shall be posted by the Developer designating the east entrance as the exclusive entrance for all semi-truck traffic. Signs prohibiting semi-truck use of the other two entrances shall also be posted by the Developer, with the signs being subject to review and approval by the City Public Works department. The City shall post a "local traffic only" sign in the vicinity of the Courthouse Boulevard Court/Annalisa Path intersection and at the Ann Marie Trail/Hwy 3 intersection. The Developer shall be responsible for the cost of the two City posted signs.

29. Between the hours of 8:00 p.m. and 7:00 a.m., trucks and trailers shall not be allowed to idle their engines on the property and trucks and trailers shall not be allowed to stop or park on the property with engines, air-conditioning units or refrigeration units running except for a fifteen (15) minute interval when initially arriving and parking at the parking lots or docks. The word "truck" shall have the same meaning as defined in Minn. Stat. § 169.01, subd. 49; i.e. a truck means every motor vehicle designed, used or maintained primarily for the transportation of property. The Owner or tenant on the property shall post signage that states such restrictions. The Owner of the property is responsible to enforce such restrictions.

30. Between the hours of 8:00 p.m. and 7:00 a.m., there shall be no deliveries by trucks and trailers and there shall be no loading or unloading of trucks and trailers. The word "truck" shall have the same meaning as defined in Minn. Stat. § 169.01, subd. 49; i.e. a truck means every motor vehicle designed, used or maintained primarily for the transportation of property. The Owner or tenant on the property shall post signage stating that no deliveries by truck will be accepted or will occur and that no loading or unloading will occur between the hours of 8:00 p.m. and 7:00 a.m. The Owner of the property is responsible to enforce such restrictions.

31. Between the hours of 11:00 p.m. and 7:00 a.m., the businesses on the property shall not be in operation, except for building interior maintenance, security monitoring and employee office use; in no event shall product and material distribution, warehousing, loading and unloading, deliveries or operation of warehouse equipment and machinery take place between 8:00 p.m. and 7:00 a.m. The Owner of the property is responsible to enforce such restrictions.

32. The City complete the street restoration to a 9-ton spring loaded rating (consisting of a two inch bituminous overlay with necessary subgrade repairs) of Courthouse Boulevard Court from the general area West of Barnes Avenue where restoration ended, to the cul-de-sac as a special assessment project with 100% of the cost being assessed to the Property and the Owner. The Developer and Owner shall waive its rights to appeal from the assessment by signing, or

causing to be signed, all necessary documents as presented by the City to waive its rights to hearing and appeal or in any manner challenge the assessments, either as to amount or the assessment process, in substantially the form attached hereto as Exhibit B. Four purposes of the waiver of the rights to appeal pursuant to the requirements of Minn. Stat. 462.3531, the estimated cost of the project shall be the cost of the Feasibility Report prepared by the a consulting engineer, chosen by the City, plus the costs of the project as estimated by the Feasibility Report, plus typical contingencies for such a project, plus the legal, administrative, engineering, financial contingencies and fiscal costs estimated by the City for the project; if the project is delayed until 2009 then the estimated amount of the total project costs for purposes of the waiver shall be increased to reflect increased additional costs. The design of the street restoration shall be subject to the recommendation of the Director of Public Works and the work will be done in conjunction with the right turn lanes described in paragraph 26.

33. At the time the City signs the plat, the Owner must fully pay the City of Inver Grove Heights for all planning, engineering review and legal fees (excluding any legal fees and cost incurred by the City in connection with the litigation and settlement of the action brought by the Developer in connection with the Project) that have been incurred up to the date the City signs the final plat, and the Owner must further escrow with the City an amount determined by the City of Inver Grove Heights for future planning and engineering review fees and for legal fees, except for such fees as may already otherwise be taken into account in the calculations or engineering inspection escrow made a part of the Development Agreement. Further, at the time of final plat application, the owner must pay the City the fees prescribed by the ordinance (to be enacted prior to final plat) to defray the costs incurred by the City in preparation of the planning studies, engineering analysis, storm water analysis, environmental review, alternative urban areawide review and natural resource inventory as such studies, analysis, reviews, inventories and modeling relate to the review, investigation and administration of the Owner's applications.

34. No over the road trucking or shipping operations and no truck terminals shall be allowed to operate from the property.

35. Approval of the Preliminary Plat and PUD Development Plans shall be subject to the conditions and recommendations listed in the Traffic Report prepared by SRF dated November 6, 2007. In addition, traffic control and geometric improvements may be made to the site in accordance with the following:

(a) Geometric Intersection Improvements. The City shall commission a traffic study as soon as possible, by SRF or another qualified traffic engineer, which study shall be limited to a determination of what, if any, additional roadway or

geometric improvements are needed to the intersection of Barnes Avenue and Courthouse Boulevard Court (hereinafter the "Intersection") to accommodate semi and other truck turning movements projected to be generated by the Project as approved under the Amended Application (Initial Traffic Study). The Developer shall pay the cost of the Initial Traffic Study, within 30 days of billing by the City.

In the event the Initial Traffic Study finds that additional road or geometric improvements are necessary (Physical Intersection Improvements), the City shall cause the Physical Intersection Improvements to be made with all of the costs related to the Physical Intersection Improvements assessed against the Property as a special assessment under Minn. Stat. Chpt. 429, payable over 10 years with interest at the rate then being charged by the City for similar assessment projects at the time of the assessment against the Property. The Developer shall sign, or cause to be signed, all necessary documents as presented by the City to waive its rights to hearing and appeal or in any manner challenge the assessments, either as to amount or the assessment process, in substantially the form attached hereto as Exhibit B. For purposes of waiver of its rights to appeal and pursuant to the requirements of Minn. Stat. § 462.3531, the estimated cost of the Physical Intersection Improvements shall be no greater that $100,000. The Physical Intersection Improvements shall be installed within a reasonable time after the City's approval of the Project and the completion of the Initial Traffic Study.

(b) Traffic Control Improvements. When 200,000 square feet of the Project's floor space has been built and issued certificates of occupancy, the City may conduct a traffic count in the area along Courthouse Boulevard Court between the Intersection and the access points to the Project. If the traffic count shows at least 10% more traffic in either the a.m. or p.m. trips than had been projected by SRF in its November 6, 2007 traffic study for the Project, then the City may commission a traffic study by a qualified traffic engineer to determine if additional traffic control devices are warranted at the Intersection as the result of the traffic generated by the Project and as projected to be generated by the Project. (Second Traffic Study) The City shall pay the cost of the Second Traffic Study, subject to the Developer paying the cost through an assessment as set forth, below.

In the event that the Second Traffic Study recommends that additional traffic controls are needed at the Intersection (Traffic Control Improvements) and the Second Traffic Study finds that without the Traffic Control Improvements the Intersection's Level of Service (hereinafter LOS) will decline by at least one grade, the Traffic Control Improvements meet the applicable Warrants under the Minnesota Manual on Uniform Traffic Control Devices and Dakota County approves the installation of the Traffic Control Improvements, the City shall install the same. The cost of the Traffic Control Improvements shall be specially assessed against the Property in equal installments over 10 years with interest at

the rate then being charged by the City for similar assessment projects at the time of assessment against the Property. The Developer shall sign, or cause to be signed, all necessary documents as presented by the City to waive its rights to hearing and appeal or in any manner challenge the assessments, either as to amount or the assessment process, in substantially the form attached hereto as Exhibit B. For purposes of waiver of its rights to appeal and pursuant to Minn. Stat. § 462.3531, the estimated cost of the Traffic Control Improvements shall be no greater than $ 400,000. The Traffic Control Improvements shall be installed within a reasonable time following completion of the Second Traffic Study. In the event Traffic Control Improvements are installed, the cost of the Second Traffic Study shall be included in the assessment against the Property.

36. The design of the three entrance/exit driveways on the site shall be modified to be consistent with the design prepared by SRF entitled DRIVEWAY CONCEPT TO RESTRICT RIGHT-TURNING TRUCK TRAFFIC, dated 11-06-07. Final design of the driveways shall be approved by the Director of Public Works and reflected on the final plans.

37. The Developer shall make all applications for such other permits and approvals as are necessary for the Project including, without limitation, application for final plat approval, applications for approval of a wetland replacement plan under the Minnesota Wetland Conservation Act (hereinafter WCA Wetland Replacement Plan) county approvals for Physical Intersection or Traffic Control Improvements, building and other necessary permit applications. The City shall process all applications in good faith and in accordance with its ordinary procedures. The City agrees that it will review the WCA Wetland Replacement Application under applicable regulations and ordinances and shall approve the same if it is compliant with all applicable criteria in the WCA and City Ordinances.

Passed this 25th day of February, 2008.

AYES: 5
NAYS: 0

George Tourville

George Tourville, Mayor

ATTEST:

Melissa R. Rheaume

Melissa Rheaume, Deputy Clerk

SITE PLAN

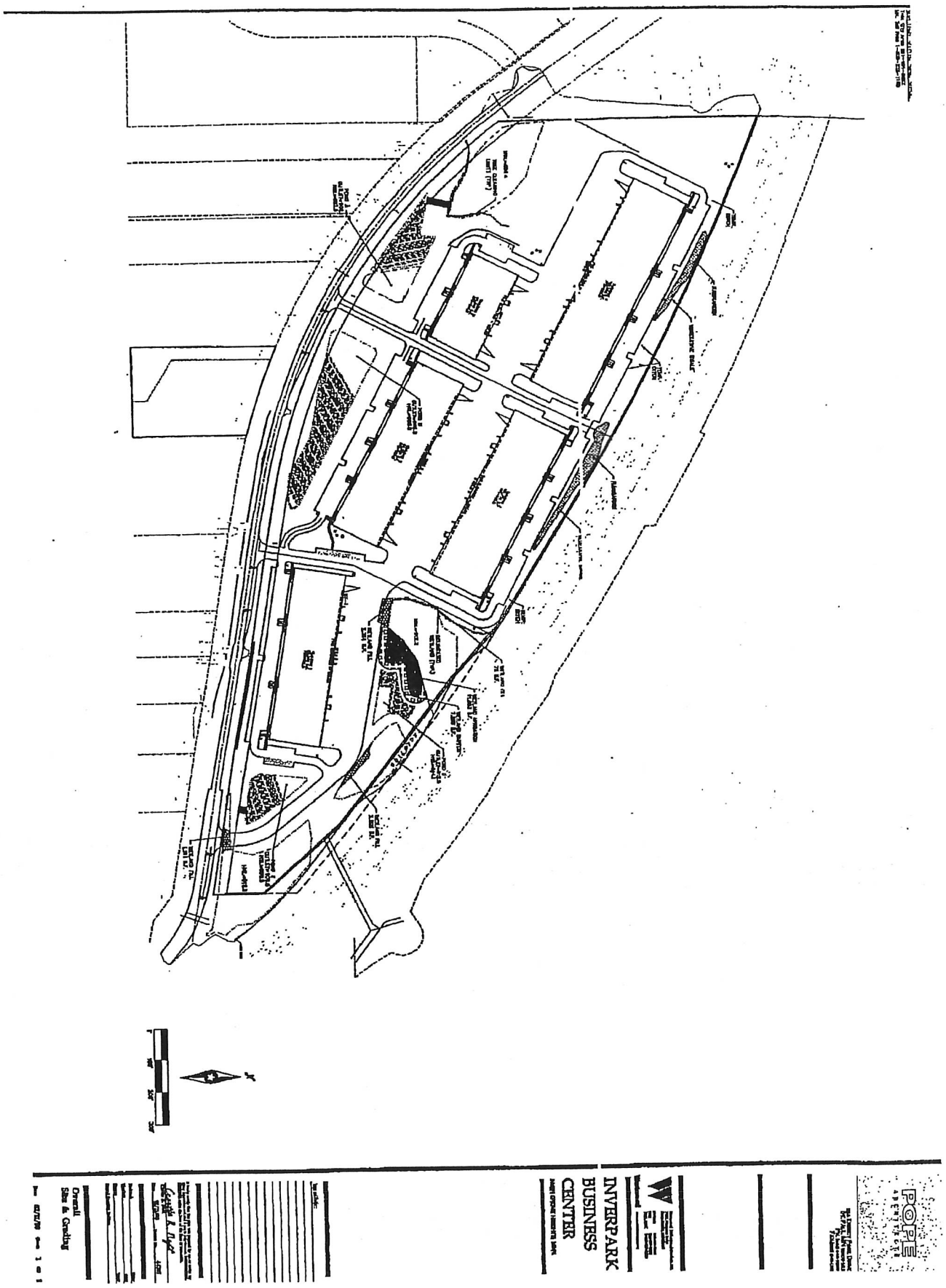
POPE ARCHITECTS
INVERPARK BUSINESS CENTER
Overall Site & Grading

EXHIBIT A

That part of the West ½ of the Northeast ¼ of Section 17, Township 27N, Range 22W, Beginning 609.68 feet West of Southeast Corner East 283.68 feet North Parallel with East line 343.13 feet to Southerly R/W Co Rd 28-A, Northwesterly on Southerly line to intersection with Line Bearing North from point of beginning, South 438.00 feet to Beginning and Part of West ½ of Northeast ¼ lying South of new State Trunk Highway #55 and North of old State Trunk Highway #55 and the Center of new State Trunk Highway #52/55 AND that part of of the East ½ of the Northeast ¼ of Section 17, Township 27N, Range 22W, lying South of new State Trunk Highway #55 and North of old State Trunk Highway #55 except Parcel 203A of State Trunk Highway Right-of-Way Plat 19-111.

© 2007 Westwood Professional Services, Inc.
Call 48 Hours before digging:
GOPHER STATE ONE CALL
Twin City Area 651-454-0002
Mn. Toll Free 1-800-252-1166

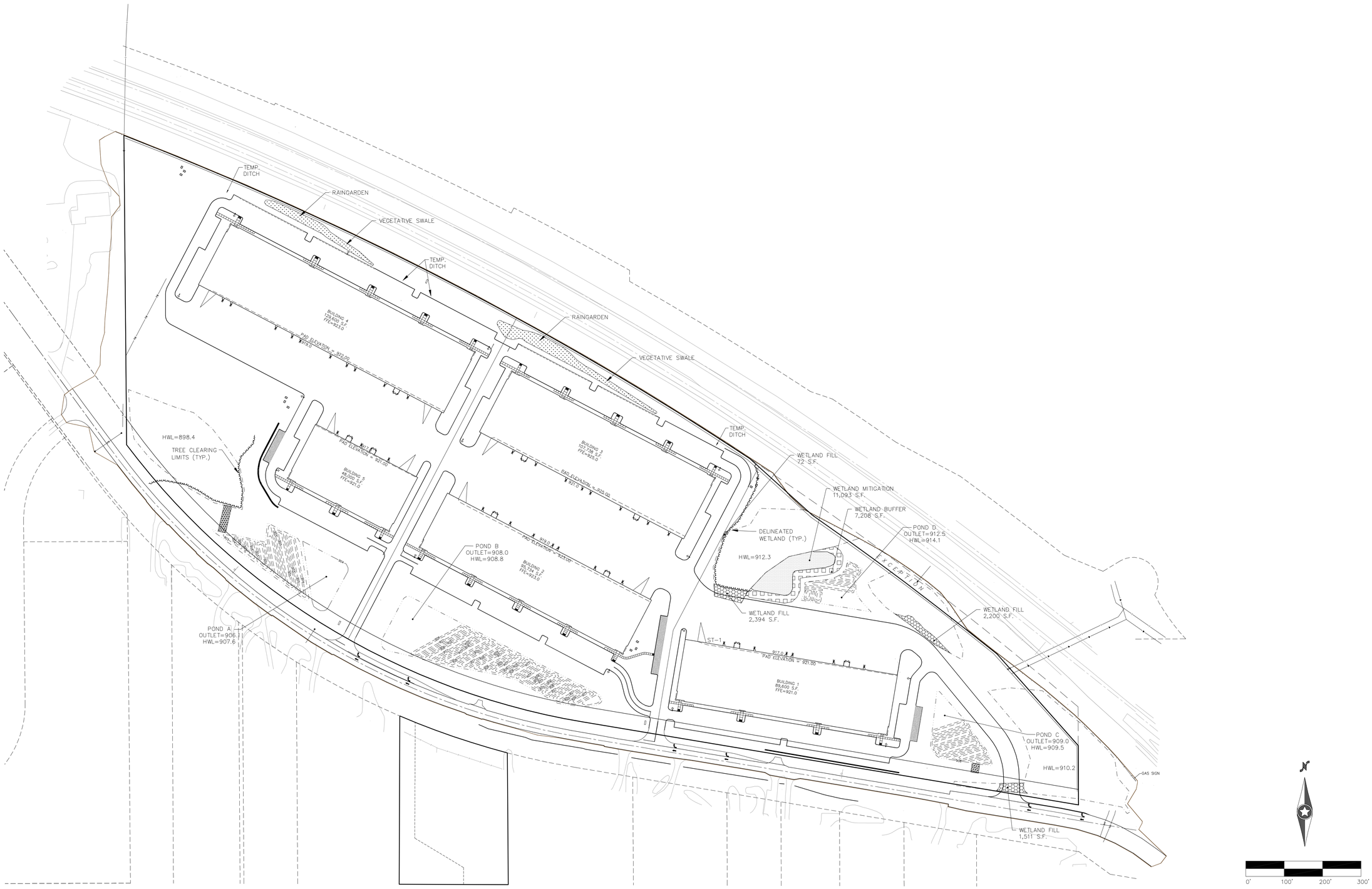

POPE ARCHITECTS

1255 ENERGY PARK DRIVE
ST. PAUL, MN 55108-5118
PH. (651) 642-9200
FAX (651) 642-1101

Westwood Professional Services, Inc.
7699 Anagram Drive
Eden Prairie, MN 55344
PHONE 952-937-5150
FAX 952-937-5822
TOLL FREE 1-888-937-5150
Westwood www.westwoodps.com

INVERPARK BUSINESS CENTER

INVER GROVE HEIGHTS, MINN.

Issues and Revisions:

I hereby certify that this plan was prepared by me or under my direct supervision and that I am a duly licensed PROFESSIONAL ENGINEER under the laws of the State of Minnesota.

Curtis R. Neft

Curtis R. Neft

Date: 02/11/08 License No. 44198

Designed: WRW
Checked: CRN
Drawn: WRW
Record Drawing by/date:

Overall Site & Grading

Date: 02/11/08 Sheet: 1 OF 1

20051172.01EXH01.DWG

Receipt:# 627622

RES $46.00

Return to:
CITY OF INVER GROVE HEIGHTS
8150 BARBARA AVE
INVER GROVE HEIGHTS MN 55077

3328814

Recorded on: 9/27/2019 11:37 AM

By: TMB, Deputy

Office of the County Recorder
Dakota County, Minnesota
Amy A. Koethe, County Recorder

City of Inver Grove Heights

www.invergroveheights.org

CERTIFICATION

STATE OF MINNESOTA)
DAKOTA COUNTY)
CITY OF INVER GROVE HEIGHTS)

The undersigned, Interim Deputy Clerk of the City of Inver Grove Heights, Dakota County, Minnesota, hereby certifies that the attached is a true and correct copy of Resolution No. 19-147 adopted by the City Council of the City of Inver Grove Heights at a lawful meeting duly called and held on August 26, 2019 which a quorum was present and acting throughout, and of the original on file in the office of the Interim Deputy Clerk, City of Inver Grove Heights, Dakota County, Minnesota.

Joe Lynch, Interim Deputy Clerk

(S E A L)

Dated: 9-24-19

8150 Barbara Ave. ▪ Inver Grove Heights, MN 55077-3412
Telephone: 651-450-2500 ▪ Fax: 651-450-2502

CITY OF INVER GROVE HEIGHTS
DAKOTA COUNTY, MINNESOTA

RESOLUTION NO. 19-147

A RESOLUTION APPROVING AMENDMENTS TO THE PRELIMINARY AND FINAL PUD AND DEVELOPMENT AGREEMENT FOR THE INVERPOINT BUSINESS PARK

CASE NO. 19-28PDA
(United Properties)

WHEREAS, a Planned Unit Development (PUD) amendment application has been submitted to the City for property legally described as;

Lot 1, Block 1, Outlots A and B, Inverpoint Business Park, Dakota County, Minnesota

WHEREAS, a public hearing concerning the PUD amendment was held before the Inver Grove Heights Planning Commission in accordance with Minnesota Statues, Section 462.357, Subdivision 3 on August 7, 2019;

WHEREAS, changes to Resolution #08-39, Preliminary Conditions of approval changes include:

#29. Between the hours of ~~8:00 p.m. and 7:00 a.m.~~ 10:00 p.m. and 6:00 a.m., trucks and trailers shall not be allowed to idle their engines on the property and trucks and trailers shall not be allowed to stop or park on the property with engines, air-conditioning units or refrigeration units running except for a fifteen (15) minute interval when initially arriving and parking at the parking lots or docks. The word "truck" shall have the same meaning as defined in Minnesota Stat. 169.03, subd. 49; *i.e.* a truck means every motor vehicle designed, used or maintained primarily for the transportation of property. The Owner or tenant on the property shall post signage that states such restrictions. The Owner of the property is responsible to enforce such restrictions.

#30. Between the hours of ~~8:00 p.m. and 7:00 a.m.~~ 10:00 p.m. and 6:00 a.m., there shall be no deliveries by trucks and trailers and there shall be no loading or unloading of trucks and trailers. The word "truck" shall have the same meaning as defined in Minnesota Stat. 169.03, subd. 49; *i.e.* a truck means every motor vehicle designed, used or maintained

primarily for the transportation of property. The Owner or tenant on the property shall post signage stating that no deliveries by truck will be accepted or will occur and that no loading or unloading will occur between the hours of ~~8:00 p.m. and 7:00 a.m.~~ 10:00 p.m. and 6:00 a.m. The Owner of the property is responsible to enforce such restrictions.

~~#31. Between the hours of 11:00 p.m. and 7:00 a.m., the businesses on the property shall not be in operation, except for building interior maintenance, security monitoring, and employee office use; in no event shall product and material distribution, warehousing, loading and unloading, deliveries or operation of warehouse equipment and machinery take place between 8:00 p.m. and 7:00 a.m. The Owner of the property is responsible to enforce such restrictions.~~

#34. No ~~over the road trucking or shipping operations and no~~ truck terminals, as defined as a specialized distribution building for redistributing goods from one truck to another, serving an intermediate transfer point, and used primarily for staging loads (rather than long-term storage), shall be allowed to operate from the property.

WHEREAS, changes to Resolution #08-189, Final Conditions of approval changes include:

#4. Between the hours of ~~8:00 p.m. and 7:00 a.m.~~ 10:00 p.m. and 6:00 a.m., trucks and trailers shall not be allowed to idle their engines on the property and trucks and trailers shall not be allowed to stop or park on the property with engines, air-conditioning units or refrigeration units running except for a fifteen (15) minute interval when initially arriving and parking at the parking lots or docks. The word "truck" shall have the same meaning as defined in Minnesota Stat. 169.03, subd. 49; *i.e.* a truck means every motor vehicle designed, used or maintained primarily for the transportation of property. The Owner or tenant on the property shall post signage that states such restrictions. The Owner of the property is responsible to enforce such restrictions.

~~#5. Between the hours of 11:00 p.m. and 7:00 a.m., the businesses on the property shall not be in operation, except for building interior maintenance, security monitoring, and employee office use; in no event shall product and material distribution, warehousing, loading and unloading, deliveries or operation of warehouse equipment and machinery take place between 8:00 p.m. and 7:00 a.m. The Owner of the property is responsible to enforce such restrictions.~~

#6. Between the hours of ~~8:00 p.m. and 7:00 a.m.~~ 10:00 p.m. and 6:00 a.m., there shall be no deliveries by trucks and trailers and there shall be no loading or unloading of trucks and trailers. The word "truck" shall have the same meaning as defined in Minnesota Stat. 169.03, subd. 49; *i.e.* a truck means every motor vehicle designed, used or maintained primarily for the transportation of property. The Owner or tenant on the property shall post signage stating that no deliveries by truck will be accepted or will occur and that no loading or unloading will occur between the hours of ~~8:00 p.m. and 7:00 a.m.~~ 10:00 p.m. and 6:00 a.m. The Owner of the property is responsible to enforce such restrictions.

#7. No ~~over the road trucking or shipping operations and no~~ truck terminals, as defined as a specialized distribution building for redistributing goods from one truck to another, serving an intermediate transfer point, and used primarily for staging loads (rather than long-term storage), shall be allowed to operate from the property.

WHEREAS, changes to the Development Contract for Inverpoint Business Park include:

Exhibit E – changes to item #5.

d. Between the hours of ~~8:00 p.m. and 7:00 a.m.~~ 10:00 p.m. and 6:00 a.m., trucks and trailers shall not be allowed to idle their engines on the property and trucks and trailers shall not be allowed to stop or park on the property with engines, air-conditioning units or refrigeration units running except for a fifteen (15) minute interval when initially arriving and parking at the parking lots or docks. The word "truck" shall have the same meaning as defined in Minnesota Stat. 169.03, subd. 49; *i.e.* a truck means every motor vehicle designed, used or maintained primarily for the transportation of property. The Owner or tenant on the property shall post signage that states such restrictions. The Owner of the property is responsible to enforce such restrictions.

e. ~~Between the hours of 11:00 p.m. and 7:00 a.m., the businesses on the property shall not be in operation, except for building interior maintenance, security monitoring, and employee office use; in no event shall product and material distribution, warehousing, loading and unloading, deliveries or operation of warehouse equipment and machinery take place between 8:00 p.m. and 7:00 a.m. The Owner of the property is responsible to enforce such restrictions.~~

f. Between the hours of ~~8:00 p.m. and 7:00 a.m.~~ 10:00 p.m. and 6:00 a.m., there shall be no deliveries by trucks and trailers and there shall be no loading or unloading of trucks and trailers. The word "truck" shall have the same meaning as defined in Minnesota Stat. 169.03, subd. 49; *i.e.* a truck means every motor vehicle designed, used or maintained primarily for the transportation of property. The Owner or tenant on the property shall post signage stating that no deliveries by truck will be accepted or will occur and that no loading or unloading will occur between the hours of ~~8:00 p.m. and 7:00 a.m.~~ 10:00 p.m. and 6:00 a.m. The Owner of the property is responsible to enforce such restrictions.

g. No ~~over the road trucking or shipping operations and no~~ truck terminals, as defined as a specialized distribution building for redistributing goods from one truck to another, serving an intermediate transfer point, and used primarily for staging loads (rather than long-term storage), shall be allowed to operate from the property.

NOW, THEREFORE BE IT RESOLVED BY THE CITY COUNCIL OF INVER GROVE HEIGHTS that, Resolution No's 08-39 and 08-139 and the Development Contract for the Plat of Inverpoint Business Park are hereby approved as stated above.

Passed this 26th day of August, 2019.

AYES: 5
NAYS: 0

George Tourville, Mayor

ATTEST:

Joseph Lynch, Interim Deputy Clerk

CONDITIONAL USE PERMIT – MANUFACTURING USE

INVERPOINT BUSINESS PARK
INVER GROVE HEIGHTS, MINNESOTA
December 11, 2020

United Properties seeks to develop phase two of the 45-acre, five building InverPoint Business Park. United Properties plans to develop Phase II as a 108,000 SF, 24'-28' clear building on a speculative basis, currently without a tenant. In our marketing efforts to secure tenant(s) for the building, we will require flexibility of use within the building. A vast majority of office/warehouse tenants, which is our target tenant profile for this space, utilizes a portion of their space for manufacturing, assembly, or production. The purpose for this request of the conditional use permit is to allow flexibility in the search and negotiation with prospective tenants for this building, and to avoid constant conversation with the city on each prospective deal. We are requesting a conditional use permit to allow for manufacturing within the proposed building, as manufacturing plays a role in most of our target market's business.

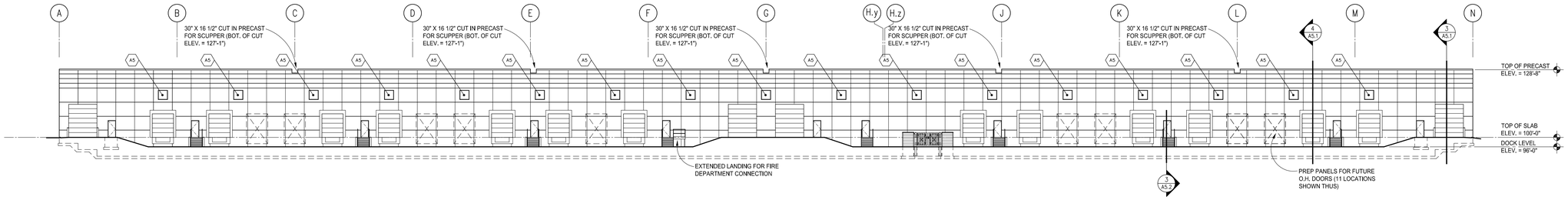

4 A3.1 SOUTH ELEVATION
1"=20'-0"

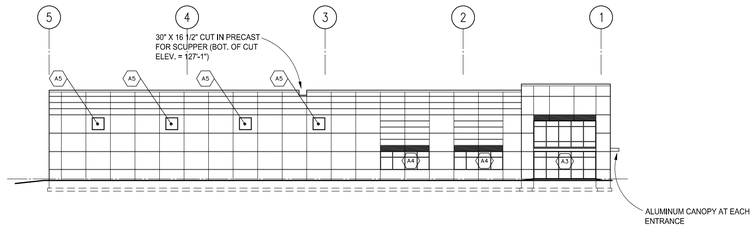

3 A3.1 EAST ELEVATION
1"=20'-0"

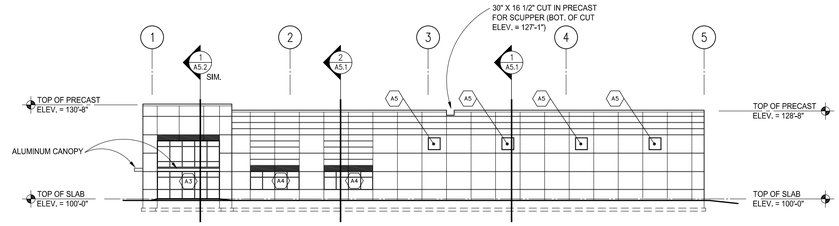

2 A3.1 WEST ELEVATION
1"=20'-0"

SEE WALL SECTIONS FOR HORIZONTAL REVEAL DIMENSIONS.

SEE SHEETS A3.2 AND A3.2 FOR CONCRETE STAIN COLOR PATTERNS.

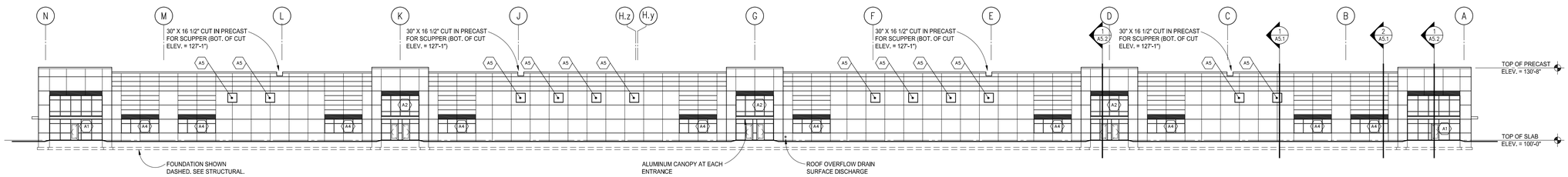

1 A3.1 NORTH ELEVATION
1"=20'-0"

POPE ARCHITECTS
1295 BANDANA BLVD N, SUITE 200
ST. PAUL, MN 55108-2735
(651) 642-9200 | FAX (651) 642-1101
www.popearch.com

UNITED PROPERTIES
CREATING DEEP ROOTS

INVERPOINTE
BUILDING 3
INVER GROVE
HEIGHTS, MN 55077

EXTERIOR ELEVATIONS

Issues and Revisions:

Commission No.	75372-20110
Drawn by	JL
Checked by	BM

SHEET
A3.1

TRUE SHEET SCALE
0" 1/2" 1"

INVERPOINT BUSINESS PARK SECOND ADDITION

KNOW ALL PERSONS BY THESE PRESENTS: That Inverwood Business Park LLC, a Delaware limited liability company, fee owner of the following described property situated in the County of Dakota, State of Minnesota, to wit:

Lot 1, Block 1, Inverpoint Business Park First Addition, according to the recorded plat thereof, Dakota County, Minnesota.

Has caused the same to be surveyed and platted as INVERTPOINT BUSINESS PARK SECOND ADDITION.

In witness whereof said Inverwood Business Park LLC, a Delaware limited liability company, has caused these presents to be signed by United Land LLC, a Minnesota limited liability company, by its proper officers this _____ day of _____, 20__.

UNITED LAND LLC

By: _____,its_____

By: _____,its_____

STATE OF MINNESOTA
COUNTY OF _____
This instrument was acknowledged before me on _____, by _____,

_____ and by _____, _____,

of United Land LLC, a Minnesota limited liability company and manager of the Inverwood Business Park LLC, a Delaware limited liability company, on behalf of the limited liability company.

_____ (Signature) _____ (Name Printed)

Notary Public, _____ County _____

My Commission Expires _____

I, Brent R. Peters, do hereby certify that this plat was prepared by me or under my direct supervision; that I am a duly Licensed Land Surveyor in the State of Minnesota; that this plat is a correct representation of the boundary survey; that all mathematical data and labels are correctly designated on this plat; that all monuments depicted on this plat have been, or will be correctly set within one year; that all water boundaries and wet lands, as defined in Minnesota Statutes, Section 505.01, Subd. 3, as of the date of this certificate are shown and labeled on this plat; and all public ways are shown and labeled on this plat.

Dated this ___ day of _____ , 20_____ .

_____
Brent R. Peters, Licensed Land Surveyor
Minnesota License No. 44123

STATE OF MINNESOTA
COUNTY OF _____
This instrument was acknowledged before me on _____ by Brent R. Peters, Land Surveyor, Minnesota License No. 44123.

_____ (Signature)

_____ (Name Printed)

Notary Public, _____ County _____

My Commission Expires _____

CITY PLANNING COMMISSION, CITY OF INVER GROVE HEIGHTS, COUNTY OF DAKOTA, STATE OF MINNESOTA
Approved by the Planning Commission of the City of Inver Grove Heights, Minnesota, this _____ day of _____, 20__.

_____ Chair

_____ Secretary

CITY COUNCIL, CITY OF INVER GROVE HEIGHTS, COUNTY OF DAKOTA, STATE OF MINNESOTA
This plat was approved by the City Council of Inver Grove Heights, Minnesota, this _____ day of _____, 20__, and hereby certifies compliance with all requirements as set forth in Minnesota Statutes, Section 505.03. Subd. 2.

_____ Mayor

_____ Clerk

COUNTY SURVEYOR, COUNTY OF DAKOTA, STATE OF MINNESOTA
I hereby certify that in accordance with Minnesota Statutes, Section 505.021, Subd. 11, this plat has been reviewed and approved this _____ day of _____ _____, 20_____.

_____
Todd B. Tollefson
Dakota County Surveyor

DEPARTMENT OF PROPERTY TAXATION AND RECORDS, COUNTY OF DAKOTA, STATE OF MINNESOTA
Pursuant to Minnesota Statutes, Section 505.021, Subd. 9, taxes payable in the year 20___, on the land hereinbefore described have been paid. Also, pursuant to Minnesota Statutes, Section 272.12, there are no delinquent taxes and transfer entered this ___ day of _____, 20___.

_____,
Amy A. Koethe
Director, Department of Property Taxation and Records

COUNTY RECORDER, COUNTY OF DAKOTA, STATE OF MINNESOTA
I hereby certify that this plat of INVERPOINT BUSINESS PARK FIRST ADDITION was filed in the office of the County Recorder for public record on this _ day of _____ _____, 20_____, at _____ o'clock _____.M., and was duly filed in Book _____ of Plats, Page _____ , as Document Number _____.

_____
Amy A. Koethe
Dakota County Recorder

Westwood
Professional Services, Inc.

INVERPOINT BUSINESS PARK SECOND ADDITION

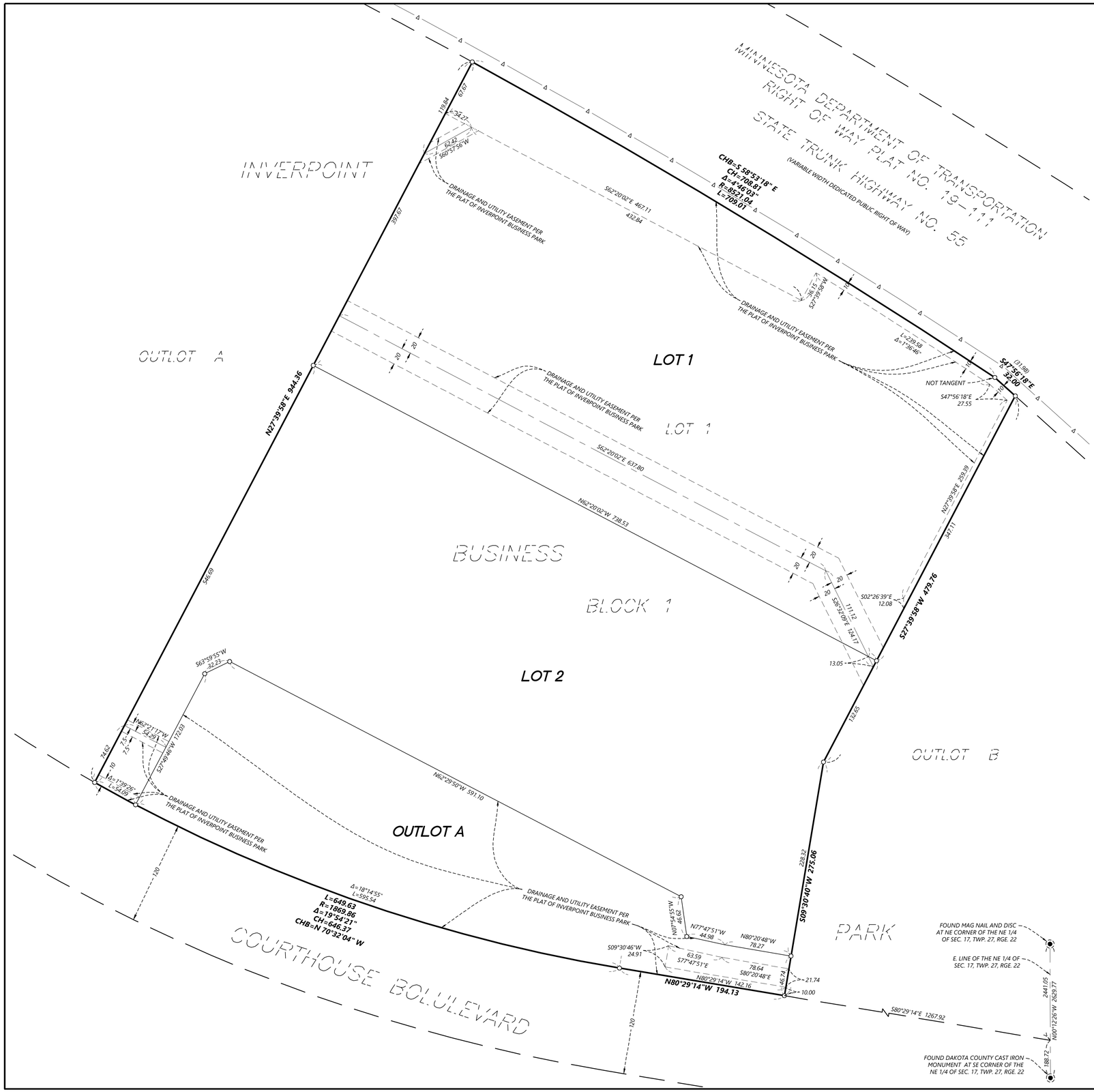

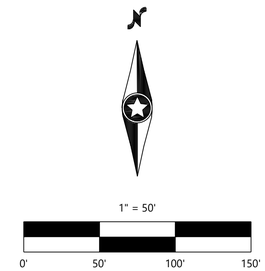

The east line of the Northeast Quarter of Section 17, Township 27, Range 22 is assumed to bear N00°12'26"W.

Denotes found XXXXX County Cast Iron Monument.

Denotes set 1/2 inch x 14 inch iron rebar marked with plastic cap inscribed LS 45873, which has been set or will be set in accordance with MS 505.021, Subd. 10. unless otherwise noted on survey.

DENOTES LIMITED ACCESS TO PUBLIC ROAD RIGHT OF WAY

NOT TO SCALE

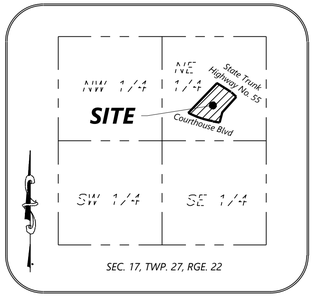

Westwood
Professional Services, Inc.

SHEET 2 OF 2 SHEETS

©2020 Westwood Professional Services, Inc.
Call 48 Hours before digging:
GOPHER STATE ONE CALL
Twin City Area 651-454-0002
Mn. Toll Free 1-800-252-1166

Final Development Plans

for

Existing Conditions, Site, Grading, Utilities, and Landscape

for

InverPoint Business Center - Building 3

Inver Grove Heights, MN

Vicinity Map

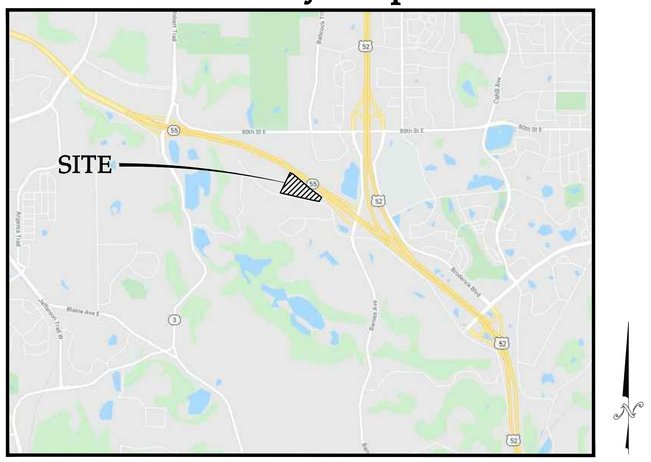

(Not to Scale)

Prepared for:

United Properties
651 Nicollet Mall, Suite 450
Minneapolis, MN 55402
Contact: Connor McCarthy
Phone: 952-837-8649
Email: connor.mccarthy@uproperties.com

Prepared by:

Westwood

Phone (952) 937-5150 12701 Whitewater Drive, Suite #300
Fax (952) 937-5822 Minnetonka, MN 55343
Toll Free (888) 937-5150 westwoodps.com
Westwood Professional Services, Inc.

Project number: 0023568.30
Contact: David T. Bade

Sheet List Table

Sheet Number	Sheet Title
C001	COVER SHEET
C100	EXISTING CONDITIONS PLAN
C201	NORTH SITE PLAN
C202	SOUTH SITE PLAN
C301	NORTH EROSION CONTROL PLAN
C302	SOUTH EROSION CONTROL PLAN
C401	NORTH GRADING AND UTILITY PLAN
C402	SOUTH GRADING AND UTILITY PLAN
C501	SITE DETAILS
C502	EROSION CONTROL AND SANITARY DETAILS
C503	WATERMAIN AND STORM SEWER DETAILS
L101	NORTH LANDSCAPE PLAN
L102	SOUTH LANDSCAPE PLAN

NO.	DATE	REVISION	SHEETS
.	.	.	.

POPE ARCHITECTS
1255 Energy Park Drive
St. Paul, MN 55108-5118
Ph. (651) 642-9200
Fax (651) 642-1101

UNITED PROPERTIES

RJRyan
Commercial Design and Construction
R.J. Ryan Construction, Inc.
1100 Mendota Heights Road
Mendota Heights, MN 55120
Ph. (651) 681-0200 Fax (651) 681-0235

INVERPOINT BUSINESS CENTER
INVER GROVE HEIGHTS, MINN.

Revisions:

I hereby certify that this plan was prepared by me or under my direct supervision and that I am a duly licensed PROFESSIONAL ENGINEER under the laws of the State of Minnesota.

Date: License No.

Designed:
Checked:
Drawn:
Record Drawing by/date:

COVER SHEET

Date: 12/07/20 Sheet: C001

0023568.30CV.dwg

© 2020 Westwood Professional Services, Inc.
Call 48 Hours before digging:
GOPHER STATE ONE CALL
Twin City Area 651-454-0002
Mn. Toll Free 1-800-252-1166

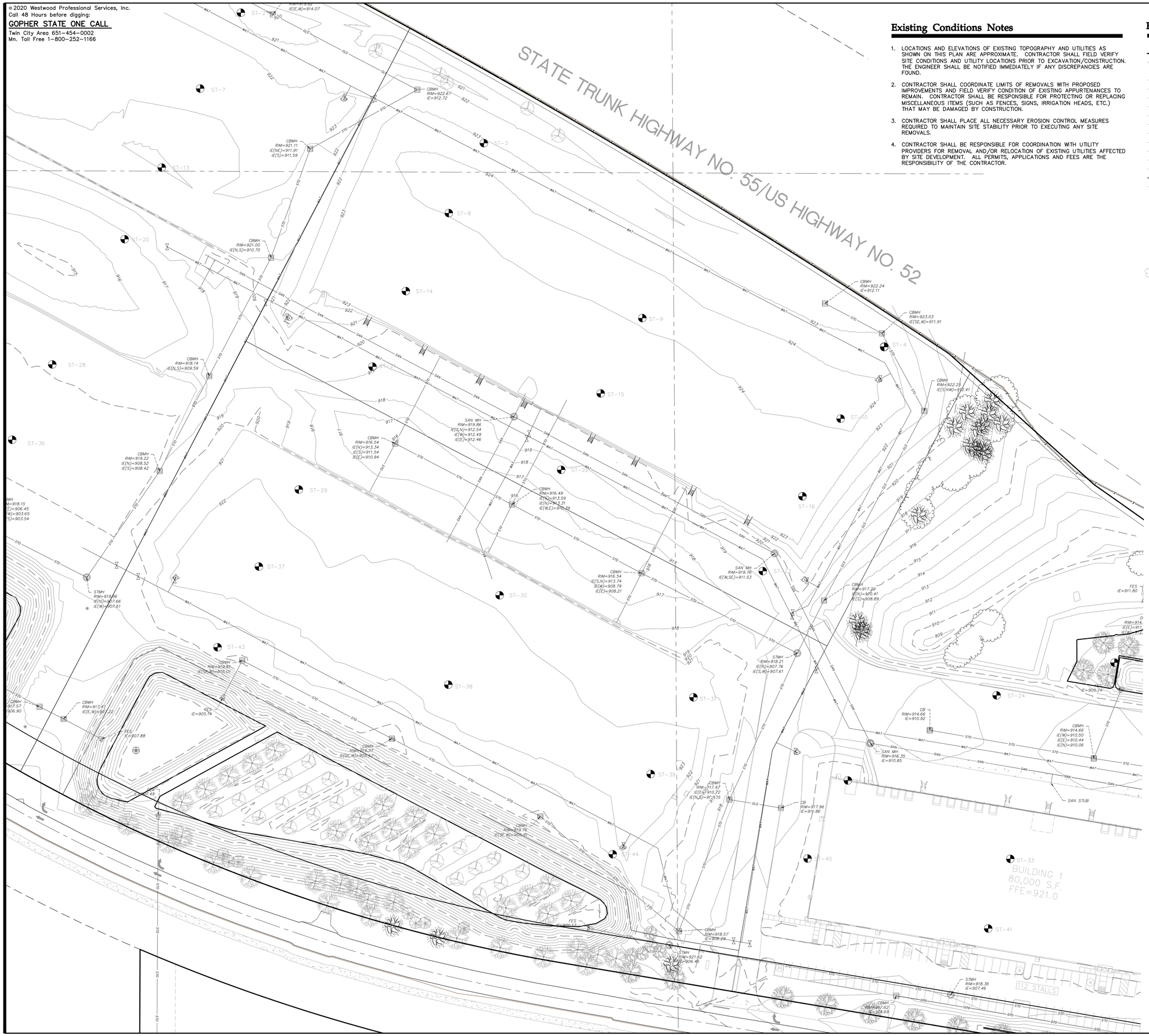

Existing Conditions Notes

1. LOCATIONS AND ELEVATIONS OF EXISTING TOPOGRAPHY AND UTILITIES AS SHOWN ON THIS PLAN ARE APPROXIMATE. CONTRACTOR SHALL FIELD VERIFY SITE CONDITIONS AND UTILITY LOCATIONS PRIOR TO EXCAVATION/CONSTRUCTION. THE ENGINEER SHALL BE NOTIFIED IMMEDIATELY IF ANY DISCREPANCIES ARE FOUND.
2. CONTRACTOR SHALL COORDINATE LIMITS OF REMOVALS WITH PROPOSED IMPROVEMENTS AND FIELD VERIFY CONDITION OF EXISTING APPURTENANCES TO REMAIN. CONTRACTOR SHALL BE RESPONSIBLE FOR PROTECTING OR REPLACING MISCELLANEOUS ITEMS (SUCH AS FENCES, SIGNS, IRRIGATION HEADS, ETC.) THAT MAY BE DAMAGED BY CONSTRUCTION.
3. CONTRACTOR SHALL PLACE ALL NECESSARY EROSION CONTROL MEASURES REQUIRED TO MAINTAIN SITE STABILITY PRIOR TO EXECUTING ANY SITE REMOVALS.
4. CONTRACTOR SHALL BE RESPONSIBLE FOR COORDINATION WITH UTILITY PROVIDERS FOR REMOVAL AND/OR RELOCATION OF EXISTING UTILITIES AFFECTED BY SITE DEVELOPMENT. ALL PERMITS, APPLICATIONS AND FEES ARE THE RESPONSIBILITY OF THE CONTRACTOR.

Existing Conditions Legend

EXISTING

- PROPERTY LINE
- CURB & GUTTER
- SAW CUT PAVEMENT
- SAN — SANITARY SEWER
- WAT — WATER MAIN
- WAT — HYDRANT
- STO — STORM SEWER
- GAS — GAS
- PUG — UNDERGROUND ELECTRIC
- POH — OVERHEAD ELECTRIC
- TUG — UNDERGROUND TELEPHONE
- TOH — OVERHEAD TELEPHONE
- FOP — TELEPHONE FIBER OPTIC
- CTV — CABLE TELEVISION
- RETAINING WALL
- FENCE
- CONCRETE
- BITUMINOUS
- BUILDING
- TREE
- LIGHT POLE
- TRAFFIC SIGN
- CONSTRUCTION BARRICADE
- SB-19 — SOIL BORING LOCATION
- TREE LINE

POPE ARCHITECTS
1255 ENERGY PARK DRIVE
ST. PAUL, MN 55108-5118
PH. (651) 642-9200
FAX (651) 642-1101

UNITED PROPERTIES

RJRyan
Commercial Design and Construction
R.J. Ryan Construction, Inc.
1100 Mendota Heights Road
Mendota Heights, MN 55120
Ph. (651) 681-0200 Fax (651) 681-0235

INVERPOINT BUSINESS CENTER

INVER GROVE HEIGHTS, MINN.

Revisions:
01: .
02: .
03: .
04: .
05: .
06: .

I hereby certify that this plan was prepared by me or under my direct supervision and that I am a duly licensed PROFESSIONAL ENGINEER under the laws of the State of Minnesota.

David T. Bade
Date: 12/07/20 License No. .

Designed: .
Checked: .
Drawn: .
Record Drawing by/date:

Date: 12/07/20 Sheet: C100

0023568.30EX.dwg

© 2020 Westwood Professional Services, Inc.
Call 48 Hours before digging:
GOPHER STATE ONE CALL
Twin City Area 651-454-0002
Mn. Toll Free 1-800-252-1166

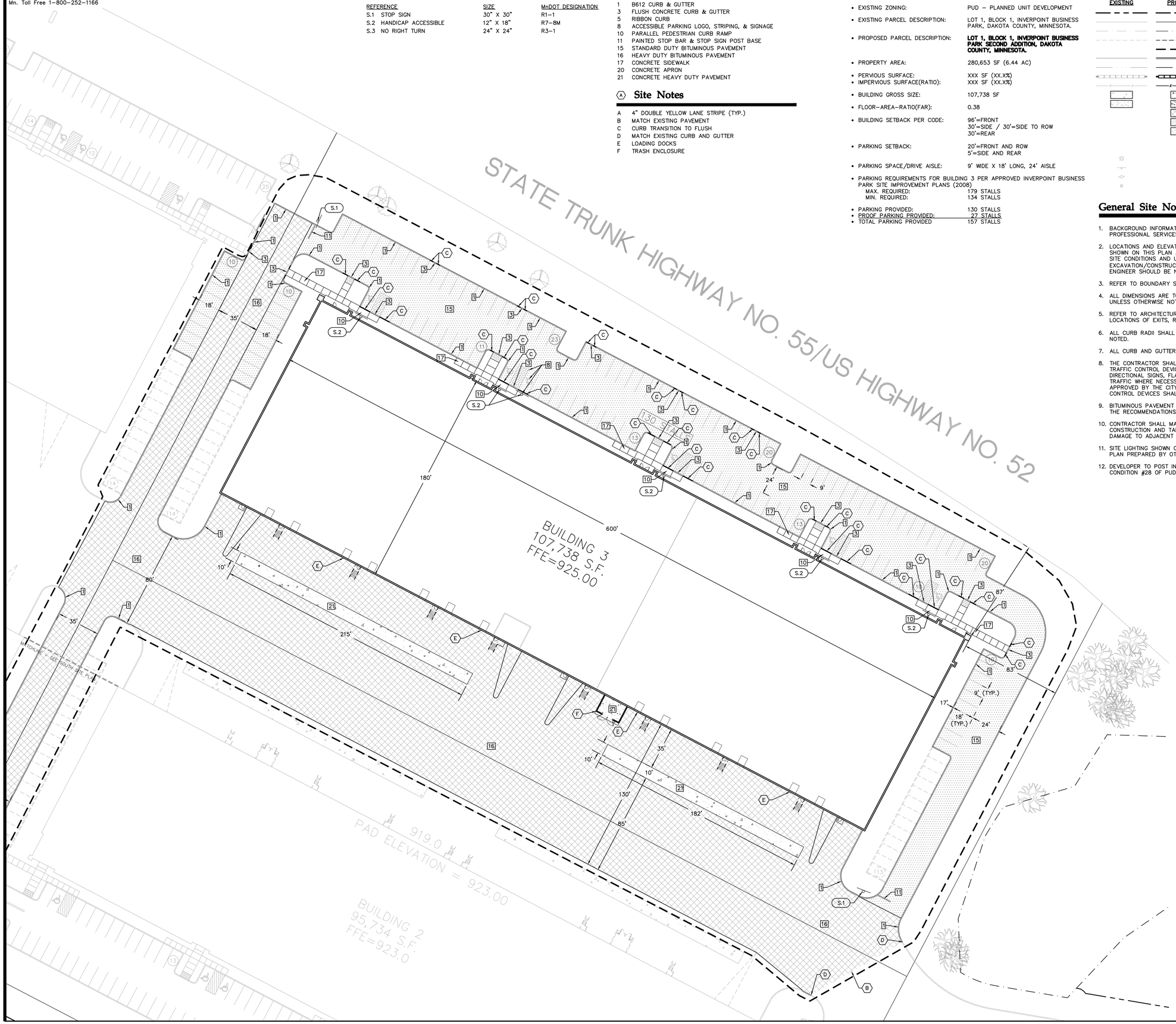

S.10 Sign Legend

REFERENCE		SIZE	MnDOT DESIGNATION
S.1	STOP SIGN	30" X 30"	R1-1
S.2	HANDICAP ACCESSIBLE	12" X 18"	R7-8M
S.3	NO RIGHT TURN	24" X 24"	R3-1

1 Site Details

1	B612 CURB & GUTTER
3	FLUSH CONCRETE CURB & GUTTER
5	RIBBON CURB
8	ACCESSIBLE PARKING LOGO, STRIPING, & SIGNAGE
10	PARALLEL PEDESTRIAN CURB RAMP
11	PAINTED STOP BAR & STOP SIGN POST BASE
15	STANDARD DUTY BITUMINOUS PAVEMENT
16	HEAVY DUTY BITUMINOUS PAVEMENT
17	CONCRETE SIDEWALK
20	CONCRETE APRON
21	CONCRETE HEAVY DUTY PAVEMENT

A Site Notes

A	4" DOUBLE YELLOW LANE STRIPE (TYP.)
B	MATCH EXISTING PAVEMENT
C	CURB TRANSITION TO FLUSH
D	MATCH EXISTING CURB AND GUTTER
E	LOADING DOCKS
F	TRASH ENCLOSURE

Site Development Summary

• EXISTING ZONING:	PUD – PLANNED UNIT DEVELOPMENT
• EXISTING PARCEL DESCRIPTION:	LOT 1, BLOCK 1, INVERPOINT BUSINESS PARK, DAKOTA COUNTY, MINNESOTA.
• PROPOSED PARCEL DESCRIPTION:	**LOT 1, BLOCK 1, INVERPOINT BUSINESS PARK SECOND ADDITION, DAKOTA COUNTY, MINNESOTA.**
• PROPERTY AREA:	280,653 SF (6.44 AC)
• PERVIOUS SURFACE:	XXX SF (XX.X%)
• IMPERVIOUS SURFACE(RATIO):	XXX SF (XX.X%)
• BUILDING GROSS SIZE:	107,738 SF
• FLOOR-AREA-RATIO(FAR):	0.38
• BUILDING SETBACK PER CODE:	96'=FRONT 30'=SIDE / 30'=SIDE TO ROW 30'=REAR
• PARKING SETBACK:	20'=FRONT AND ROW 5'=SIDE AND REAR
• PARKING SPACE/DRIVE AISLE:	9' WIDE X 18' LONG, 24' AISLE
• PARKING REQUIREMENTS FOR BUILDING 3 PER APPROVED INVERPOINT BUSINESS PARK SITE IMPROVEMENT PLANS (2008)	
MAX. REQUIRED:	179 STALLS
MIN. REQUIRED:	134 STALLS
• PARKING PROVIDED:	130 STALLS
• PROOF PARKING PROVIDED:	27 STALLS
• TOTAL PARKING PROVIDED	157 STALLS

Site Legend

EXISTING	PROPOSED	
		PROPERTY LINE
		LOT LINE
		SETBACK LINE
		EASEMENT LINE
		CONSTRUCTION LIMITS
		CURB AND GUTTER
		POND NORMAL WATER LEVEL
		RETAINING WALL
		FENCE
		CONCRETE PAVEMENT
		CONCRETE SIDEWALK
		HEAVY DUTY BITUMINOUS PAVEMENT
		STANDARD DUTY BITUMINOUS PAVEMENT
		PERVIOUS PAVEMENT
	68	NUMBER OF PARKING STALLS
	T	TRANSFORMER
		SITE LIGHTING
		TRAFFIC SIGN
		POWER POLE
		BOLLARD / POST

General Site Notes

1. BACKGROUND INFORMATION FOR THIS PROJECT PROVIDED BY WESTWOOD PROFESSIONAL SERVICES MINNETONKA MINNESOTA, 2008.
2. LOCATIONS AND ELEVATIONS OF EXISTING TOPOGRAPHY AND UTILITIES AS SHOWN ON THIS PLAN ARE APPROXIMATE. CONTRACTOR SHALL FIELD VERIFY SITE CONDITIONS AND UTILITY LOCATIONS PRIOR TO EXCAVATION/CONSTRUCTION. IF ANY DISCREPANCIES ARE FOUND, THE ENGINEER SHOULD BE NOTIFIED IMMEDIATELY.
3. REFER TO BOUNDARY SURVEY FOR LOT BEARINGS, DIMENSIONS AND AREAS.
4. ALL DIMENSIONS ARE TO FACE OF CURB OR EXTERIOR FACE OF BUILDING UNLESS OTHERWISE NOTED.
5. REFER TO ARCHITECTURAL PLANS FOR EXACT BUILDING DIMENSIONS AND LOCATIONS OF EXITS, RAMPS, AND TRUCK DOCKS.
6. ALL CURB RADII SHALL BE 3.0 FEET (TO FACE OF CURB) UNLESS OTHERWISE NOTED.
7. ALL CURB AND GUTTER SHALL BE B612 UNLESS OTHERWISE NOTED.
8. THE CONTRACTOR SHALL BE RESPONSIBLE FOR PROVIDING AND MAINTAINING TRAFFIC CONTROL DEVICES SUCH AS BARRICADES, WARNING SIGNS, DIRECTIONAL SIGNS, FLAGGERS AND LIGHTS TO CONTROL THE MOVEMENT OF TRAFFIC WHERE NECESSARY. PLACEMENT OF THESE DEVICES SHALL BE APPROVED BY THE CITY AND ENGINEER PRIOR TO PLACEMENT. TRAFFIC CONTROL DEVICES SHALL CONFORM TO APPROPRIATE MNDOT STANDARDS.
9. BITUMINOUS PAVEMENT AND CONCRETE SECTIONS TO BE IN ACCORDANCE WITH THE RECOMMENDATIONS OF THE GEOTECHNICAL ENGINEER.
10. CONTRACTOR SHALL MAINTAIN FULL ACCESS TO ADJACENT PROPERTIES DURING CONSTRUCTION AND TAKE ALL PRECAUTIONS NECESSARY TO AVOID PROPERTY DAMAGE TO ADJACENT PROPERTIES.
11. SITE LIGHTING SHOWN ON PLAN IS FOR REFERENCE ONLY. REFER TO LIGHTING PLAN PREPARED BY OTHERS FOR SITE LIGHTING DETAILS AND PHOTOMETRICS.
12. DEVELOPER TO POST INTERNAL TRUCK TURNING INSTRUCTION SIGNS PER CONDITION #28 OF PUD APPROVAL.

POPE ARCHITECTS
1255 ENERGY PARK DRIVE
ST. PAUL, MN 55108-5118
PH. (651) 642-9200
FAX (651) 642-1101

UNITED PROPERTIES

RJRyan
Commercial Design and Construction
R.J. Ryan Construction, Inc.
1100 Mendota Heights Road
Mendota Heights, MN 55120
Ph. (651) 681-0200 Fax (651) 681-0235

INVERPOINT BUSINESS CENTER

INVER GROVE HEIGHTS, MINN.

Revisons:
01:
02:
03:
04:
05:
06:

I hereby certify that this plan was prepared by me or under my direct supervision and that I am a duly licensed PROFESSIONAL ENGINEER under the laws of the State of Minnesota.

David T. Bade
Date 12/07/20 License No.

Designed:
Checked:
Drawn:
Record Drawing by/date:

Date: 12/07/20 Sheet: C201

0023568.30SP.dwg

© 2020 Westwood Professional Services, Inc.
Call 48 Hours before digging:
GOPHER STATE ONE CALL
Twin City Area 651-454-0002
Mn. Toll Free 1-800-252-1166

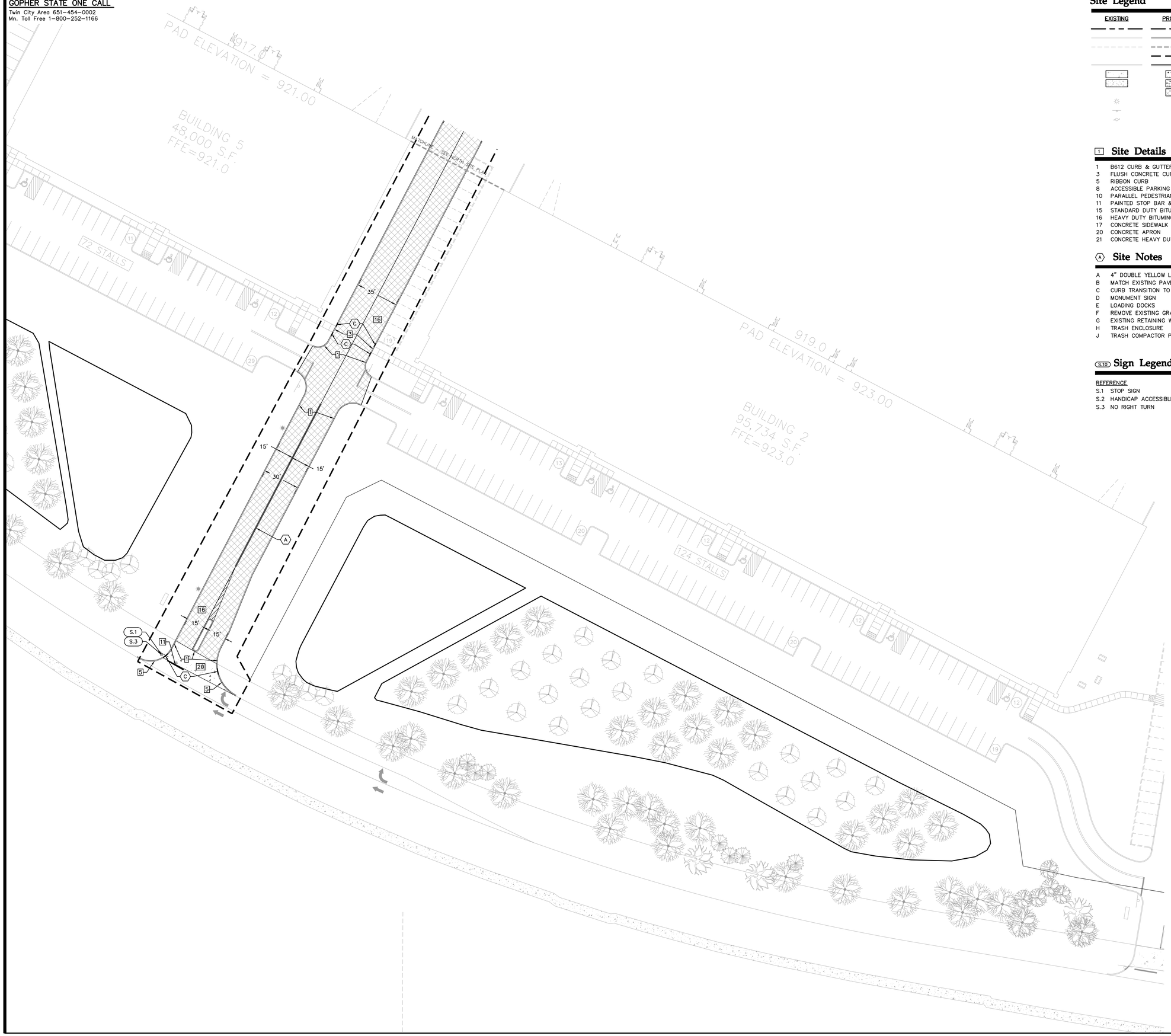

Site Legend

EXISTING	PROPOSED	
		PROPERTY LINE
		LOT LINE
		EASEMENT LINE
		CONSTRUCTION LIMITS
		CURB AND GUTTER
		CONCRETE PAVEMENT
		CONCRETE SIDEWALK
		HEAVY DUTY BITUMINOUS PAVEMENT
		SITE LIGHTING
		TRAFFIC SIGN
		POWER POLE

1 Site Details

1 B612 CURB & GUTTER
3 FLUSH CONCRETE CURB & GUTTER
5 RIBBON CURB
8 ACCESSIBLE PARKING LOGO, STRIPING, & SIGNAGE
10 PARALLEL PEDESTRIAN CURB RAMP
11 PAINTED STOP BAR & STOP SIGN POST BASE
15 STANDARD DUTY BITUMINOUS PAVEMENT
16 HEAVY DUTY BITUMINOUS PAVEMENT
17 CONCRETE SIDEWALK
20 CONCRETE APRON
21 CONCRETE HEAVY DUTY PAVEMENT

A Site Notes

A 4" DOUBLE YELLOW LANE STRIPE (TYP.)
B MATCH EXISTING PAVEMENT
C CURB TRANSITION TO FLUSH
D MONUMENT SIGN
E LOADING DOCKS
F REMOVE EXISTING GRAVEL
G EXISTING RETAINING WALL
H TRASH ENCLOSURE
J TRASH COMPACTOR PAD – SEE STRUCTURAL PLANS

S.10 Sign Legend

REFERENCE	SIZE	MnDOT DESIGNATION
S.1 STOP SIGN	30" X 30"	R1-1
S.2 HANDICAP ACCESSIBLE	12" X 18"	R7-8M
S.3 NO RIGHT TURN	24" X 24"	R3-1

0' 30' 60' 90'

POPE ARCHITECTS
1255 ENERGY PARK DRIVE
ST. PAUL, MN 55108-5118
PH. (651) 642-9200
FAX (651) 642-1101

UNITED PROPERTIES

RJRyan
Commercial Design and Construction
R.J. Ryan Construction, Inc.
1100 Mendota Heights Road
Mendota Heights, MN 55120
Ph. (651) 681-0200 Fax (651) 681-0235

INVERPOINT BUSINESS CENTER

INVER GROVE HEIGHTS, MINN.

Revisions:
01:
02:
03:
04:
05:
06:

I hereby certify that this plan was prepared by me or under my direct supervision and that I am a duly licensed PROFESSIONAL ENGINEER under the laws of the State of Minnesota.

David T. Bade
Date 12/07/20 License No.

Designed:
Checked:
Drawn:
Record Drawing by/date:

Date: 12/07/20 Sheet: C202

0023568.30SP.dwg

© 2020 Westwood Professional Services, Inc.
Call 48 Hours before digging:
GOPHER STATE ONE CALL
Twin City Area 651-454-0002
Mn. Toll Free 1-800-252-1166

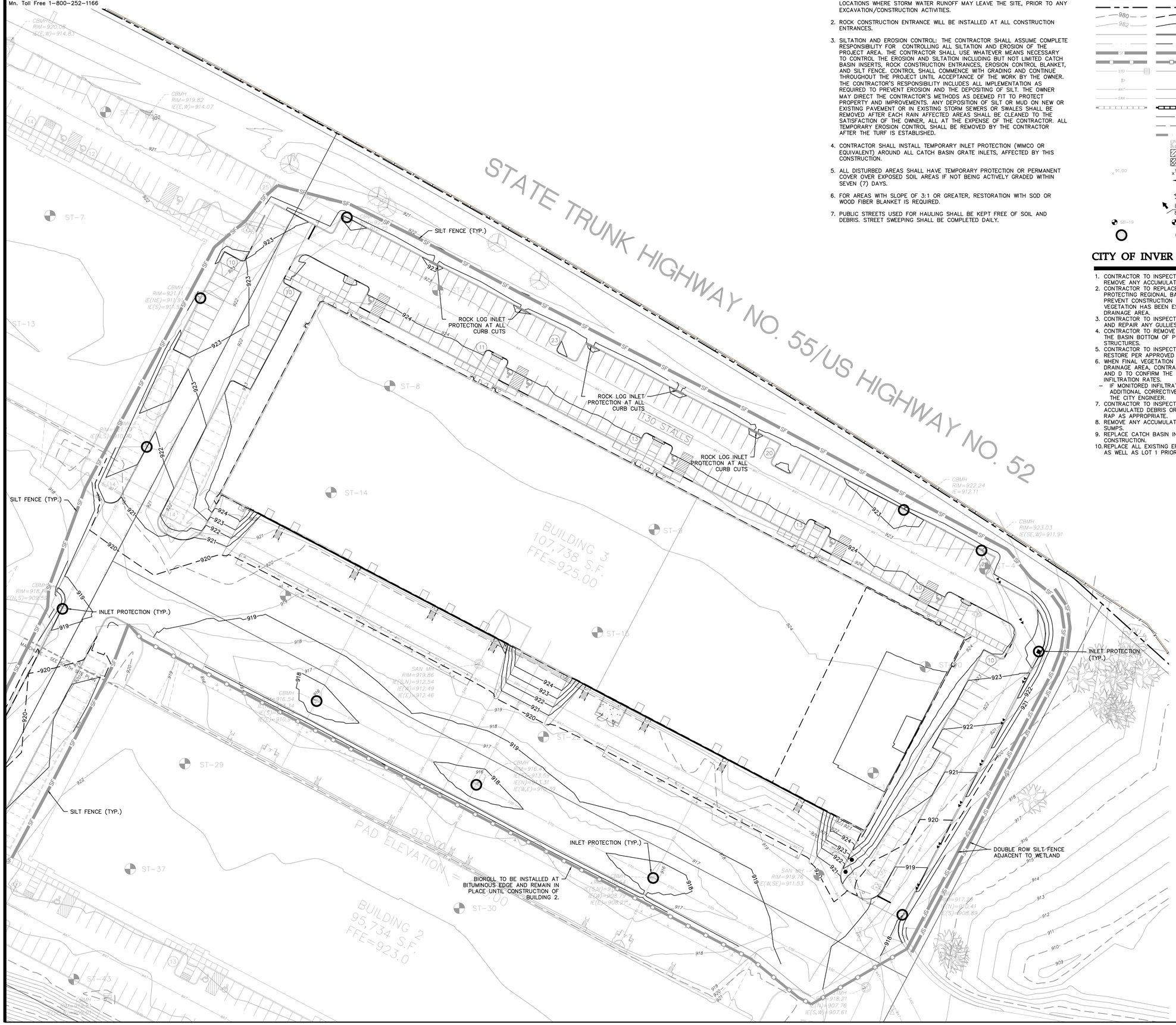

Erosion Control Notes

1. SILT FENCE WILL BE INSTALLED AROUND SITE IN ALL FILL AREAS AND LOCATIONS WHERE STORM WATER RUNOFF MAY LEAVE THE SITE, PRIOR TO ANY EXCAVATION/CONSTRUCTION ACTIVITIES.
2. ROCK CONSTRUCTION ENTRANCE WILL BE INSTALLED AT ALL CONSTRUCTION ENTRANCES.
3. SILTATION AND EROSION CONTROL: THE CONTRACTOR SHALL ASSUME COMPLETE RESPONSIBILITY FOR CONTROLLING ALL SILTATION AND EROSION OF THE PROJECT AREA. THE CONTRACTOR SHALL USE WHATEVER MEANS NECESSARY TO CONTROL THE EROSION AND SILTATION INCLUDING BUT NOT LIMITED CATCH BASIN INSERTS, ROCK CONSTRUCTION ENTRANCES, EROSION CONTROL BLANKET, AND SILT FENCE. CONTROL SHALL COMMENCE WITH GRADING AND CONTINUE THROUGHOUT THE PROJECT UNTIL ACCEPTANCE OF THE WORK BY THE OWNER. THE CONTRACTOR'S RESPONSIBILITY INCLUDES ALL IMPLEMENTATION AS REQUIRED TO PREVENT EROSION AND THE DEPOSITING OF SILT. THE OWNER MAY DIRECT THE CONTRACTOR'S METHODS AS DEEMED FIT TO PROTECT PROPERTY AND IMPROVEMENTS. ANY DEPOSITION OF SILT OR MUD ON NEW OR EXISTING PAVEMENT OR IN EXISTING STORM SEWERS OR SWALES SHALL BE REMOVED AFTER EACH RAIN AFFECTED AREAS SHALL BE CLEANED TO THE SATISFACTION OF THE OWNER, ALL AT THE EXPENSE OF THE CONTRACTOR. ALL TEMPORARY EROSION CONTROL SHALL BE REMOVED BY THE CONTRACTOR AFTER THE TURF IS ESTABLISHED.
4. CONTRACTOR SHALL INSTALL TEMPORARY INLET PROTECTION (WIMCO OR EQUIVALENT) AROUND ALL CATCH BASIN GRATE INLETS, AFFECTED BY THIS CONSTRUCTION.
5. ALL DISTURBED AREAS SHALL HAVE TEMPORARY PROTECTION OR PERMANENT COVER OVER EXPOSED SOIL AREAS IF NOT BEING ACTIVELY GRADED WITHIN SEVEN (7) DAYS.
6. FOR AREAS WITH SLOPE OF 3:1 OR GREATER, RESTORATION WITH SOD OR WOOD FIBER BLANKET IS REQUIRED.
7. PUBLIC STREETS USED FOR HAULING SHALL BE KEPT FREE OF SOIL AND DEBRIS. STREET SWEEPING SHALL BE COMPLETED DAILY.

Erosion Control Legend

EXISTING	PROPOSED	
		PROPERTY LINE
980	980	INDEX CONTOUR
982	982	INTERVAL CONTOUR
		CURB AND GUTTER
		POND NORMAL WATER LEVEL
SF	SF	SILT FENCE
		BIOLOGS
STO		STORM SEWER
		FLARED END SECTION (WITH RIPRAP)
WAT		WATER MAIN
SAN		SANITARY SEWER
		RETAINING WALL
		DRAIN TILE
		RIDGE LINE
		GRADING LIMITS
		ROCK CONSTRUCTION ENTRANCE
		EROSION CONTROL BLANKET
		TURF REINFORCEMENT MAT
91.00	91.00	SPOT ELEVATION
	1.50%	FLOW DIRECTION
	Top 89.00 Bot 87.00	TOP AND BOTTOM OF RETAINING WALL
	E.O.F. 85.00	EMERGENCY OVERFLOW
SB-19	SB-19	SOIL BORING LOCATION
		INLET PROTECTION

CITY OF INVER GROVE HEIGHTS NOTES

1. CONTRACTOR TO INSPECT THE BOTTOM OF EXISTING DEPRESSION 2 (E2) AND REMOVE ANY ACCUMULATED CONSTRUCTION SEDIMENT.
2. CONTRACTOR TO REPLACE ANY NON-FUNCTIONAL PERIMETER CONTROL PROTECTING REGIONAL BASIN EP-102A. THE BASIN MUST BE PROTECTED TO PREVENT CONSTRUCTION SEDIMENT ENTERING THE BASIN UNTIL FINAL VEGETATION HAS BEEN ESTABLISHED WITHIN THE ENTIRE CONTRIBUTING DRAINAGE AREA.
3. CONTRACTOR TO INSPECT BASIN SIDE SLOPE VEGETATION AT PONDS C AND D, AND REPAIR ANY GULLIES OR AREAS OF EROSION.
4. CONTRACTOR TO REMOVE ANY ACCUMULATED CONSTRUCTION SEDIMENT FROM THE BASIN BOTTOM OF PONDS C AND D, AS WELL AS IN ALL INLET STRUCTURES.
5. CONTRACTOR TO INSPECT BASIN VEGETATION AND REMOVE ANY NOXIOUS WEED, RESTORE PER APPROVED LANDSCAPE PLAN AS NEEDED.
6. WHEN FINAL VEGETATION HAS BEEN ESTABLISHED IN THE CONTRIBUTION DRAINAGE AREA, CONTRACTOR SHALL TEST INFILTRATION RATES OF PONDS C AND D TO CONFIRM THE RATES ARE CONSISTENT WITH APPROVED DESIGN INFILTRATION RATES.
   - IF MONITORED INFILTRATION RATES DO NOT MEET APPROVED DESIGN CRITERIA, ADDITIONAL CORRECTIVE MEASURES WILL BE REQUIRED AS DETERMINED BY THE CITY ENGINEER.
7. CONTRACTOR TO INSPECT ALL FLARED END SECTIONS, REMOVE ANY ACCUMULATED DEBRIS OR SEDIMENT FROM STORM GRATE RIP RAP, REPAIR RIP RAP AS APPROPRIATE.
8. REMOVE ANY ACCUMULATED SEDIMENT FROM CATCH BASIN INLET AREAS AND SUMPS.
9. REPLACE CATCH BASIN INLET PROTECTION PRIOR TO THE START OF CONSTRUCTION.
10. REPLACE ALL EXISTING EROSION CONTROL MEASURES ON OUTLOTS A AND B, AS WELL AS LOT 1 PRIOR TO CONSTRUCTION.

0' 30' 60' 90'

POPE ARCHITECTS
1255 ENERGY PARK DRIVE
ST. PAUL, MN 55108-5118
PH. (651) 642-9200
FAX (651) 642-1101

UNITED PROPERTIES

RJRyan
Commercial Design and Construction
R.J. Ryan Construction, Inc.
1100 Mendota Heights Road
Mendota Heights, MN 55120
Ph. (651) 681-0200 Fax (651) 681-0235

INVERPOINT BUSINESS CENTER

INVER GROVE HEIGHTS, MINN.

Revisions:
01:
02:
03:
04:
05:
06:

I hereby certify that this plan was prepared by me or under my direct supervision and that I am a duly licensed PROFESSIONAL ENGINEER under the laws of the State of Minnesota.

David T. Bade
Date: 12/07/20 License No.

Designed:
Checked:
Drawn:
Record Drawing by/date:

Date: 12/07/20 Sheet: C301

0023568.30EC.dwg

© 2020 Westwood Professional Services, Inc.
Call 48 Hours before digging:
GOPHER STATE ONE CALL
Twin City Area 651-454-0002
Mn. Toll Free 1-800-252-1166

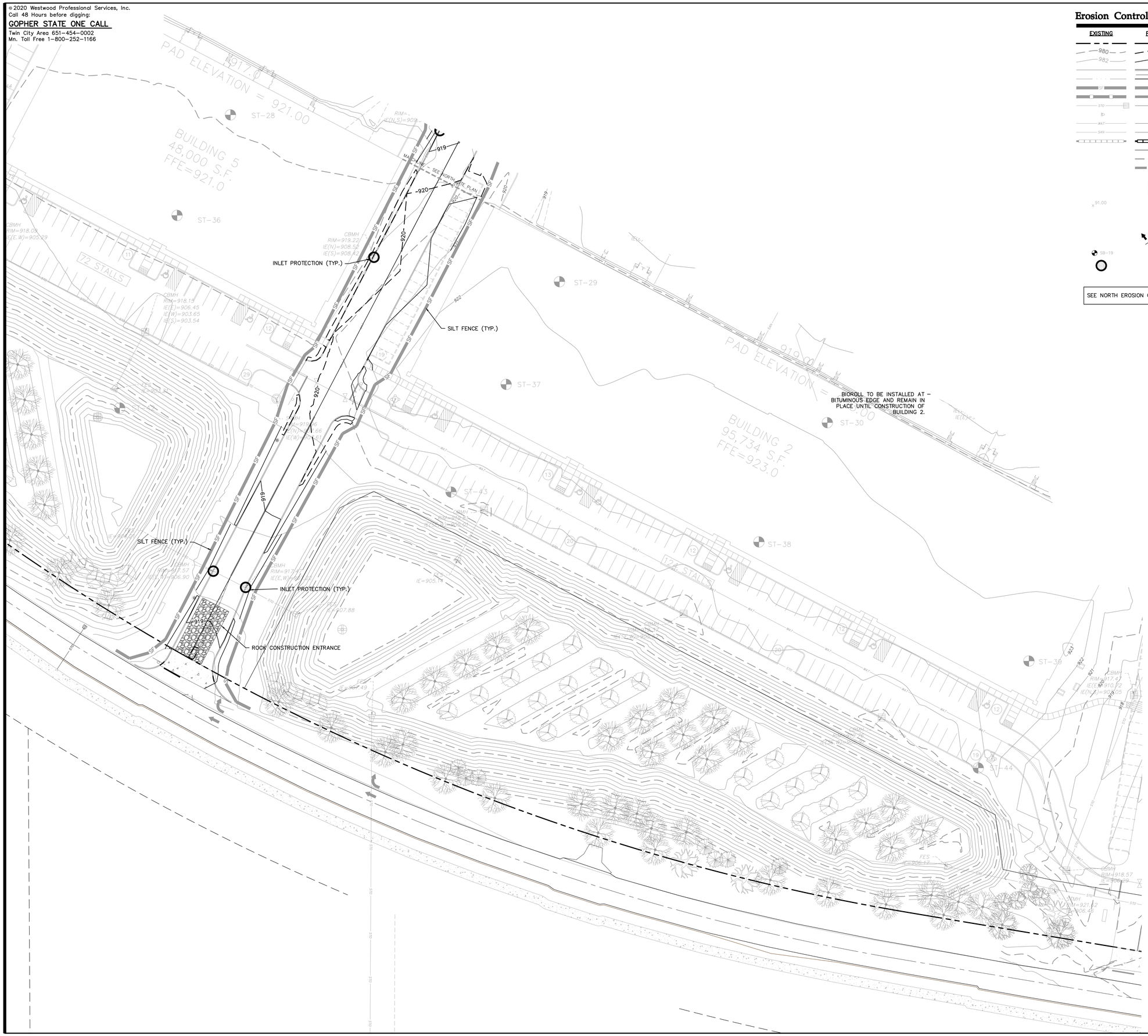

Erosion Control Legend

EXISTING	PROPOSED	
		PROPERTY LINE
980	980	INDEX CONTOUR
982	982	INTERVAL CONTOUR
		CURB AND GUTTER
		POND NORMAL WATER LEVEL
SF	SF	SILT FENCE
		BIOLOGS
STO		STORM SEWER
		FLARED END SECTION (WITH RIPRAP)
WAT		WATER MAIN
SAN		SANITARY SEWER
		RETAINING WALL
		DRAIN TILE
		RIDGE LINE
		GRADING LIMITS
		ROCK CONSTRUCTION ENTRANCE
		EROSION CONTROL BLANKET
		TURF REINFORCEMENT MAT
x 91.00	x 91.00	SPOT ELEVATION
	1.50%	FLOW DIRECTION
	T=919.0 B=918.6	TOP AND BOTTOM OF RETAINING WALL
	E.O.F. 85.00	EMERGENCY OVERFLOW
SB-19	SB-19	SOIL BORING LOCATION
		INLET PROTECTION

SEE NORTH EROSION CONTROL PLAN FOR EROSION CONTROL NOTES

0' 30' 60' 90'

POPE ARCHITECTS
1255 ENERGY PARK DRIVE
ST. PAUL, MN 55108-5118
PH. (651) 642-9200
FAX (651) 642-1101

UNITED PROPERTIES

RJRyan
Commercial Design and Construction
R.J. Ryan Construction, Inc.
1100 Mendota Heights Road
Mendota Heights, MN 55120
Ph. (651) 681-0200 Fax (651) 681-0235

INVERPOINT BUSINESS CENTER

INVER GROVE HEIGHTS, MINN.

Revisions:
01:
02:
03:
04:
05:
06:

I hereby certify that this plan was prepared by me or under my direct supervision and that I am a duly licensed PROFESSIONAL ENGINEER under the laws of the State of Minnesota.

David T. Bade
Date: 12/07/20 License No.

Designed:
Checked:
Drawn:
Record Drawing by/date:

Date: 12/07/20 Sheet: C302

0023568.30EC.dwg

© 2020 Westwood Professional Services, Inc.
Call 48 Hours before digging:
GOPHER STATE ONE CALL
Twin City Area 651-454-0002
Mn. Toll Free 1-800-252-1166

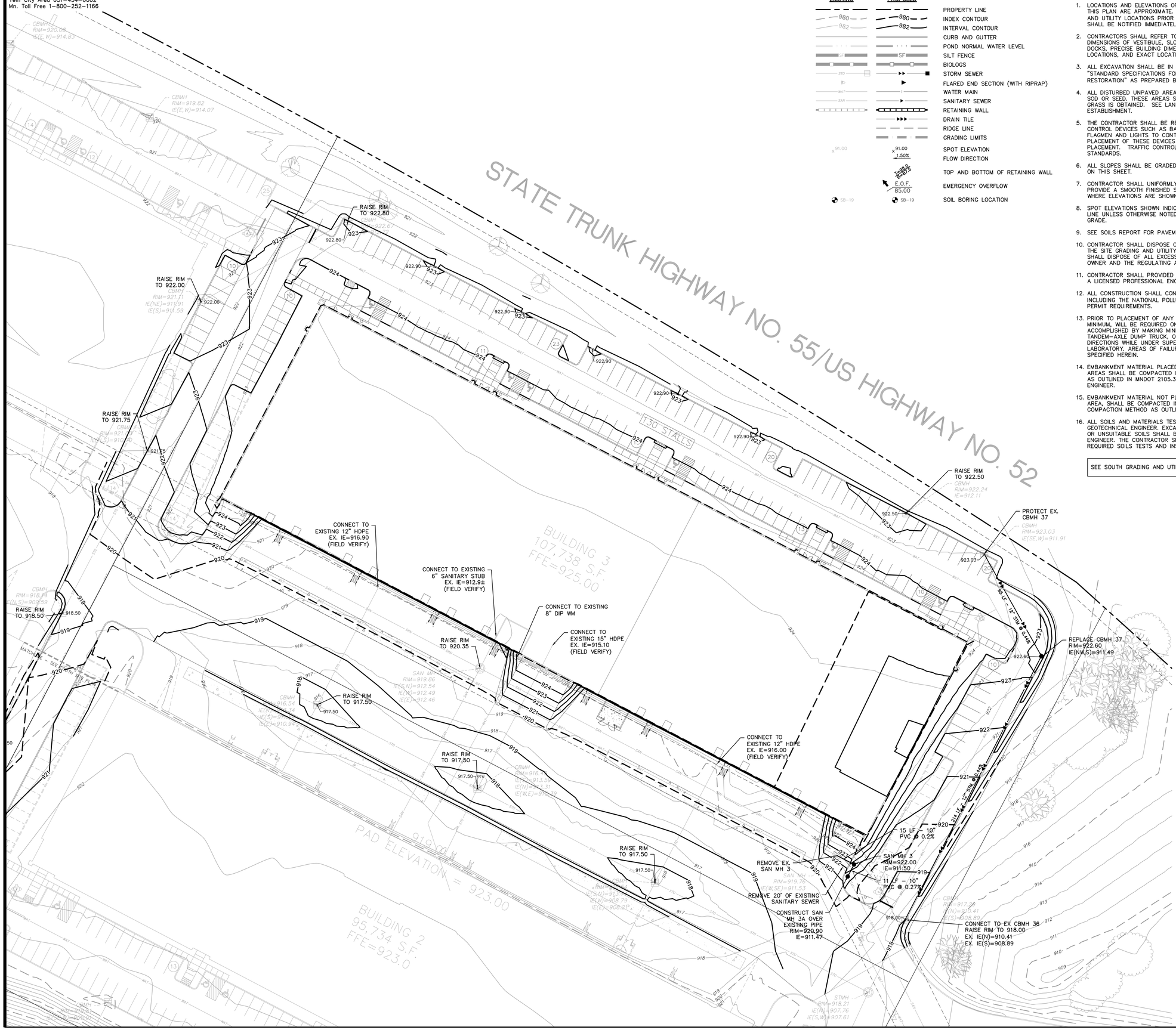

Grading Legend

EXISTING	PROPOSED	
980	980	PROPERTY LINE
982	982	INDEX CONTOUR
		INTERVAL CONTOUR
		CURB AND GUTTER
		POND NORMAL WATER LEVEL
SF	SF	SILT FENCE
		BIOLOGS
STO		STORM SEWER
		FLARED END SECTION (WITH RIPRAP)
WAT		WATER MAIN
SAN		SANITARY SEWER
		RETAINING WALL
		DRAIN TILE
		RIDGE LINE
		GRADING LIMITS
x 91.00	x 91.00	SPOT ELEVATION
	1.50%	FLOW DIRECTION
	Top of Bank 918	TOP AND BOTTOM OF RETAINING WALL
	E.O.F. 85.00	EMERGENCY OVERFLOW
SB-19	SB-19	SOIL BORING LOCATION

Grading Notes

1. LOCATIONS AND ELEVATIONS OF EXISTING TOPOGRAPHY AND UTILITIES AS SHOWN ON THIS PLAN ARE APPROXIMATE. CONTRACTOR SHALL FIELD VERIFY SITE CONDITIONS AND UTILITY LOCATIONS PRIOR TO EXCAVATION/CONSTRUCTION. THE ENGINEER SHALL BE NOTIFIED IMMEDIATELY IF ANY DISCREPANCIES ARE FOUND.
2. CONTRACTORS SHALL REFER TO ARCHITECTURAL PLANS FOR EXACT LOCATIONS AND DIMENSIONS OF VESTIBULE, SLOPED PAVEMENT, EXIT PORCHES, RAMPS, TRUCK DOCKS, PRECISE BUILDING DIMENSIONS, EXACT BUILDING UTILITY ENTRANCE LOCATIONS, AND EXACT LOCATIONS AND NUMBER OF DOWNSPOUTS.
3. ALL EXCAVATION SHALL BE IN ACCORDANCE WITH THE CURRENT EDITION OF "STANDARD SPECIFICATIONS FOR TRENCH EXCAVATION AND BACKFILL/SURFACE RESTORATION" AS PREPARED BY THE CITY ENGINEERS ASSOCIATION OF MINNESOTA.
4. ALL DISTURBED UNPAVED AREAS ARE TO RECEIVE FOUR INCHES OF TOPSOIL AND SOD OR SEED. THESE AREAS SHALL BE WATERED UNTIL A HEALTHY STAND OF GRASS IS OBTAINED. SEE LANDSCAPE PLAN FOR PLANTING AND TURF ESTABLISHMENT.
5. THE CONTRACTOR SHALL BE RESPONSIBLE FOR PROVIDING AND MAINTAINING TRAFFIC CONTROL DEVICES SUCH AS BARRICADES, WARNING SIGNS, DIRECTIONAL SIGNS, FLAGMEN AND LIGHTS TO CONTROL THE MOVEMENT OF TRAFFIC WHERE NECESSARY. PLACEMENT OF THESE DEVICES SHALL BE APPROVED BY THE ENGINEER PRIOR TO PLACEMENT. TRAFFIC CONTROL DEVICES SHALL CONFORM TO APPROPRIATE MNDOT STANDARDS.
6. ALL SLOPES SHALL BE GRADED TO 3:1 OR FLATTER, UNLESS OTHERWISE INDICATED ON THIS SHEET.
7. CONTRACTOR SHALL UNIFORMLY GRADE AREAS WITHIN LIMITS OF GRADING AND PROVIDE A SMOOTH FINISHED SURFACE WITH UNIFORM SLOPES BETWEEN POINTS WHERE ELEVATIONS ARE SHOWN OR BETWEEN SUCH POINTS AND EXISTING GRADES.
8. SPOT ELEVATIONS SHOWN INDICATE FINISHED PAVEMENT ELEVATIONS & GUTTER FLOW LINE UNLESS OTHERWISE NOTED. PROPOSED CONTOURS ARE TO FINISHED SURFACE GRADE.
9. SEE SOILS REPORT FOR PAVEMENT THICKNESSES AND HOLD DOWNS.
10. CONTRACTOR SHALL DISPOSE OF ANY EXCESS SOIL MATERIAL THAT EXISTS AFTER THE SITE GRADING AND UTILITY CONSTRUCTION IS COMPLETED. THE CONTRACTOR SHALL DISPOSE OF ALL EXCESS SOIL MATERIAL IN A MANNER ACCEPTABLE TO THE OWNER AND THE REGULATING AGENCIES.
11. CONTRACTOR SHALL PROVIDED A STRUCTURAL RETAINING WALL DESIGN CERTIFIED BY A LICENSED PROFESSIONAL ENGINEER.
12. ALL CONSTRUCTION SHALL CONFORM TO LOCAL, STATE AND FEDERAL RULES INCLUDING THE NATIONAL POLLUTANT DISCHARGE ELIMINATION SYSTEM (NPDES) PERMIT REQUIREMENTS.
13. PRIOR TO PLACEMENT OF ANY STRUCTURE OR PAVEMENT, A PROOF ROLL, AT MINIMUM, WILL BE REQUIRED ON THE SUBGRADE. PROOF ROLLING SHALL BE ACCOMPLISHED BY MAKING MINIMUM OF 2 COMPLETE PASSES WITH FULLY-LOADED TANDEM-AXLE DUMP TRUCK, OR APPROVED EQUAL, IN EACH OF 2 PERPENDICULAR DIRECTIONS WHILE UNDER SUPERVISION AND DIRECTION OF THE INDEPENDENT TESTING LABORATORY. AREAS OF FAILURE SHALL BE EXCAVATED AND RECOMPACTED AS SPECIFIED HEREIN.
14. EMBANKMENT MATERIAL PLACED BENEATH BUILDINGS AND STREET OR PARKING AREAS SHALL BE COMPACTED IN ACCORDANCE WITH THE SPECIFIED DENSITY METHOD AS OUTLINED IN MNDOT 2105.3F1 AND THE REQUIREMENTS OF THE GEOTECHNICAL ENGINEER.
15. EMBANKMENT MATERIAL NOT PLACED IN THE BUILDING PAD, STREETS OR PARKING AREA, SHALL BE COMPACTED IN ACCORDANCE WITH REQUIREMENTS OF THE ORDINARY COMPACTION METHOD AS OUTLINED IN MNDOT 2105.3F2.
16. ALL SOILS AND MATERIALS TESTING SHALL BE COMPLETED BY AN INDEPENDENT GEOTECHNICAL ENGINEER. EXCAVATION FOR THE PURPOSE OF REMOVING UNSTABLE OR UNSUITABLE SOILS SHALL BE COMPLETED AS REQUIRED BY THE GEOTECHNICAL ENGINEER. THE CONTRACTOR SHALL BE RESPONSIBLE FOR COORDINATING ALL REQUIRED SOILS TESTS AND INSPECTIONS WITH THE GEOTECHNICAL ENGINEER.

SEE SOUTH GRADING AND UTILITY PLAN FOR UTILITY NOTES

POPE ARCHITECTS
1255 ENERGY PARK DRIVE
ST. PAUL, MN 55108-5118
PH. (651) 642-9200
FAX (651) 642-1101

UNITED PROPERTIES

RJRyan
Commercial Design and Construction
R.J. Ryan Construction, Inc.
1100 Mendota Heights Road
Mendota Heights, MN 55120
Ph. (651) 681-0200 Fax (651) 681-0235

INVERPOINT BUSINESS CENTER

INVER GROVE HEIGHTS, MINN.

Revisions:
01:
02:
03:
04:
05:
06:

I hereby certify that this plan was prepared by me or under my direct supervision and that I am a duly licensed PROFESSIONAL ENGINEER under the laws of the State of Minnesota.

David T. Bade
Date: 12/07/20 License No.

Designed:
Checked:
Drawn:
Record Drawing by/date:

Date: 12/07/20 Sheet: C401

© 2020 Westwood Professional Services, Inc.
Call 48 Hours before digging:
GOPHER STATE ONE CALL
Twin City Area 651-454-0002
Mn. Toll Free 1-800-252-1166

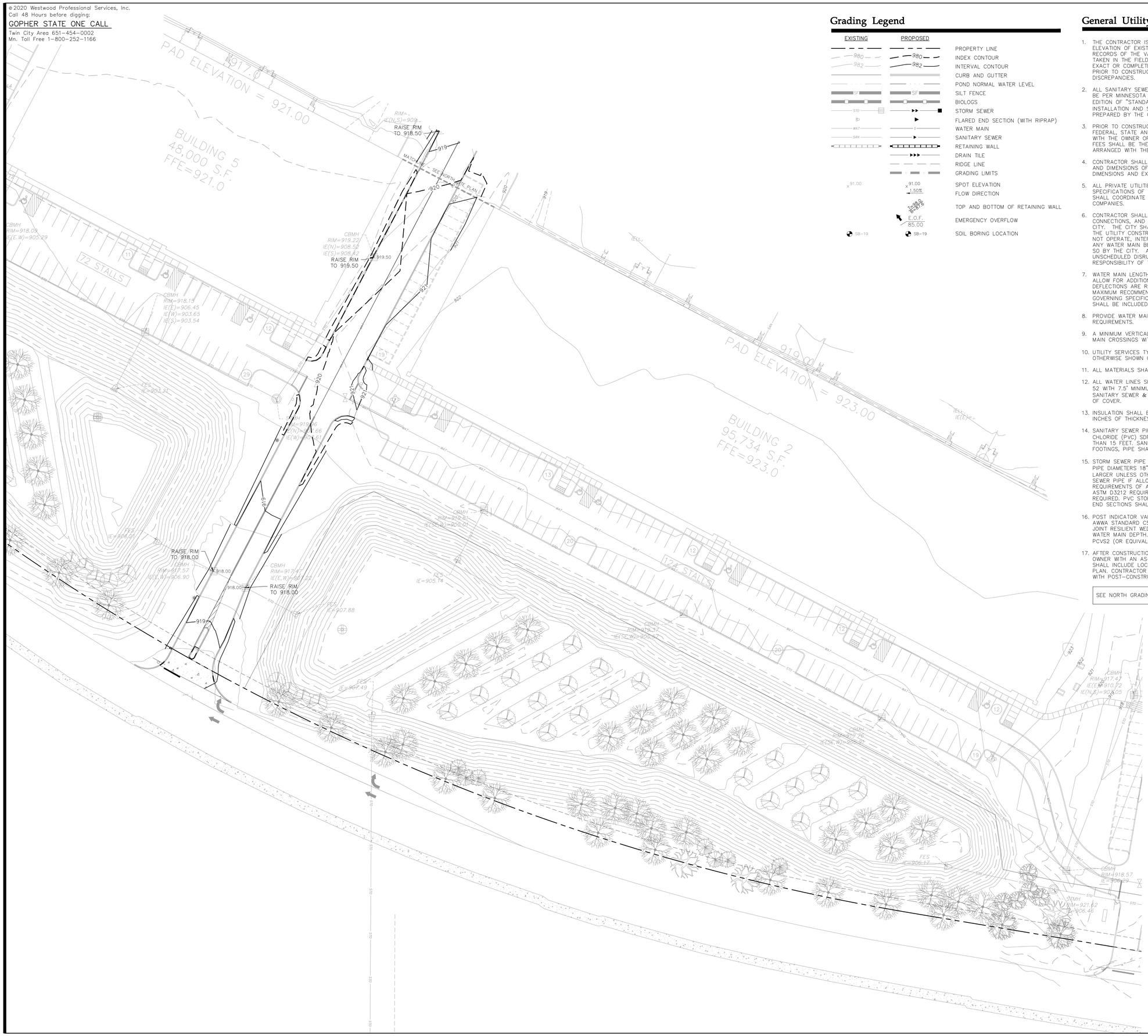

Grading Legend

EXISTING	PROPOSED	
		PROPERTY LINE
980	980	INDEX CONTOUR
982	982	INTERVAL CONTOUR
		CURB AND GUTTER
		POND NORMAL WATER LEVEL
SF	SF	SILT FENCE
		BIOLOGS
STO		STORM SEWER
		FLARED END SECTION (WITH RIPRAP)
WAT		WATER MAIN
SAN		SANITARY SEWER
		RETAINING WALL
		DRAIN TILE
		RIDGE LINE
		GRADING LIMITS
x 91.00	x 91.00	SPOT ELEVATION
	1.50%	FLOW DIRECTION
	TW=98.0 BW=97.0	TOP AND BOTTOM OF RETAINING WALL
	E.O.F. 85.00	EMERGENCY OVERFLOW
SB-19	SB-19	SOIL BORING LOCATION

General Utility Notes

1. THE CONTRACTOR IS SPECIFICALLY CAUTIONED THAT THE LOCATION AND/OR ELEVATION OF EXISTING UTILITIES AS SHOWN ON THESE PLANS ARE BASED ON RECORDS OF THE VARIOUS UTILITY COMPANIES AND LIMITED MEASUREMENTS TAKEN IN THE FIELD. THE INFORMATION SHALL NOT BE RELIED ON AS BEING EXACT OR COMPLETE. THE CONTRACTOR SHALL VERIFY EXISTING CONDITIONS PRIOR TO CONSTRUCTION AND NOTIFY THE OWNER OR ENGINEER OF DISCREPANCIES.
2. ALL SANITARY SEWER, STORM SEWER AND WATER MAIN INSTALLATIONS SHALL BE PER MINNESOTA PLUMBING CODE AND IN ACCORDANCE WITH THE CURRENT EDITION OF "STANDARD SPECIFICATIONS FOR WATER MAIN AND SERVICE LINE INSTALLATION AND SANITARY SEWER AND STORM SEWER INSTALLATION" AS PREPARED BY THE CITY ENGINEERS ASSOCIATION OF MINNESOTA.
3. PRIOR TO CONSTRUCTION, THE CONTRACTOR SHALL OBTAIN THE NECESSARY FEDERAL, STATE AND LOCAL PERMITS FOR THE PROPOSED WORK OR VERIFY WITH THE OWNER OR ENGINEER THAT PERMITS HAVE BEEN OBTAINED. PERMIT FEES SHALL BE THE RESPONSIBILITY OF THE CONTRACTOR UNLESS OTHERWISE ARRANGED WITH THE OWNER.
4. CONTRACTOR SHALL REFER TO ARCHITECTURAL PLANS FOR EXACT LOCATION AND DIMENSIONS OF DOORWAYS, RAMPS, TRUCK DOCKS, PRECISE BUILDING DIMENSIONS AND EXACT BUILDING UTILITY CONNECTION LOCATIONS.
5. ALL PRIVATE UTILITIES SHALL BE CONSTRUCTED IN ACCORDANCE WITH THE SPECIFICATIONS OF THE APPROPRIATE UTILITY COMPANY. THE CONTRACTOR SHALL COORDINATE THE SERVICE LINE CONSTRUCTION WITH THE UTILITY COMPANIES.
6. CONTRACTOR SHALL OBTAIN ALL NECESSARY CITY PERMITS FOR UTILITY CONNECTIONS, AND UTILITIES SHALL BE INSPECTED AND APPROVED BY THE CITY. THE CITY SHALL BE NOTIFIED 48-HOURS PRIOR TO COMMENCING WITH THE UTILITY CONSTRUCTION OR ANY REQUIRED TESTING. CONTRACTOR SHALL NOT OPERATE, INTERFERE WITH, CONNECT ANY PIPE OR HOSE TO, OR TAP ANY WATER MAIN BELONGING TO THE CITY UNLESS DULY AUTHORIZED TO DO SO BY THE CITY. ANY ADVERSE CONSEQUENCES OF SCHEDULED OR UNSCHEDULED DISRUPTIONS OF SERVICE TO THE PUBLIC ARE TO BE THE RESPONSIBILITY OF THE CONTRACTOR.
7. WATER MAIN LENGTHS AS SHOWN ARE APPROXIMATE HORIZONTAL LENGTHS. ALLOW FOR ADDITIONAL PIPE WHEN INSTALLING ON SLOPES OR WHEN DEFLECTIONS ARE REQUIRED. THE JOINT DEFLECTIONS SHALL NOT EXCEED THE MAXIMUM RECOMMENDED BY THE PIPE MANUFACTURER OR BY LOCAL GOVERNING SPECIFICATIONS. FITTINGS REQUIRED TO CONSTRUCT WATER MAIN SHALL BE INCLUDED IN WATER MAIN CONSTRUCTION.
8. PROVIDE WATER MAIN THRUST RESTRAINTS PER CITY STANDARD REQUIREMENTS.
9. A MINIMUM VERTICAL SEPARATION OF 18 INCHES IS REQUIRED AT ALL WATER MAIN CROSSINGS WITH SANITARY SEWER OR STORM SEWER.
10. UTILITY SERVICES TYPICALLY TERMINATE 5' OUTSIDE BUILDING WALL UNLESS OTHERWISE SHOWN OR NOTED.
11. ALL MATERIALS SHALL COMPLY WITH THE REQUIREMENTS OF THE CITY.
12. ALL WATER LINES SHALL BE DUCTILE IRON WRAPPED IN POLYETHYLENE, CLASS 52 WITH 7.5' MINIMUM COVER. PROVIDE MINIMUM SEPARATION OF 18" FROM SANITARY SEWER & STORM SEWER. INSULATE WATER MAIN IF LESS THAN 7.5' OF COVER.
13. INSULATION SHALL BE DOW STYROFOAM HI BRAND 35 OR EQUIVALENT, WITH 4 INCHES OF THICKNESS.
14. SANITARY SEWER PIPE OUTSIDE THE BUILDING ENVELOPE SHALL BE POLYVINYL CHLORIDE (PVC) SDR 35 OR 26. SDR 26 IS REQUIRED FOR DEPTHS GREATER THAN 15 FEET. SANITARY SEWER PIPE WITHIN 5 FEET OF BUILDING AND UNDER FOOTINGS, PIPE SHALL BE PVC SCHEDULE 40.
15. STORM SEWER PIPE SHALL BE REINFORCED CONCRETE PIPE (CLASS 5 FOR PIPE DIAMETERS 18" AND SMALLER, CLASS 3 FOR PIPE DIAMETERS 21" AND LARGER UNLESS OTHERWISE NOTED) WITH R-4 GASKETS, OR HDPE STORM SEWER PIPE IF ALLOWED BY THE CITY. HDPE STORM PIPE SHALL MEET REQUIREMENTS OF ASTM F2648. PIPE SHALL BE WATER TIGHT ACCORDING TO ASTM D3212 REQUIREMENTS. SEE PLAN FOR LOCATIONS WHERE RCP IS REQUIRED. PVC STORM SEWER PIPE SHALL BE SCHEDULE 40 PIPE. FLARED END SECTIONS SHALL BE RCP WITH TRASH GUARDS & RIP-RAP.
16. POST INDICATOR VALVES SHALL BE CLOW F-5750 (OR EQUIVALENT) MEETING AWWA STANDARD C509 AND CITY STANDARDS. VALVE TO BE MECHANICAL JOINT RESILIENT WEDGE GATE VALVE. POST TO BE ADJUSTABLE FOR 8 FEET WATER MAIN DEPTH. THE ELECTRICAL ALARM SWITCH SHALL BE PART NO. PCVS2 (OR EQUIVALENT).
17. AFTER CONSTRUCTION IS COMPLETED, THE CONTRACTOR SHALL PROVIDE THE OWNER WITH AN AS-BUILT RECORD OF UTILITY CONSTRUCTION. THE AS-BUILT SHALL INCLUDE LOCATION AND LENGTH DEVIATIONS OR CHANGES TO THE PLAN. CONTRACTOR TO VERIFY WITH OWNER OR ENGINEER WHETHER A PLAN WITH POST-CONSTRUCTION ELEVATIONS IS REQUIRED.

SEE NORTH GRADING AND UTILITY PLAN FOR GRADING NOTES

POPE ARCHITECTS
1255 ENERGY PARK DRIVE
ST. PAUL, MN 55108-5118
PH. (651) 642-9200
FAX (651) 642-1101

UNITED PROPERTIES

RJRyan
Commercial Design and Construction
R.J. Ryan Construction, Inc.
1100 Mendota Heights Road
Mendota Heights, MN 55120
Ph. (651) 681-0200 Fax (651) 681-0235

INVERPOINT BUSINESS CENTER

INVER GROVE HEIGHTS, MINN.

Revisons:
01:
02:
03:
04:
05:
06:

I hereby certify that this plan was prepared by me or under my direct supervision and that I am a duly licensed PROFESSIONAL ENGINEER under the laws of the State of Minnesota.

David T. Bade
Date: 12/07/20 License No.

Designed:
Checked:
Drawn:
Record Drawing by/date:

Date: 12/07/20 Sheet: C402

©2020 Westwood Professional Services, Inc.
Call 48 Hours before digging:
GOPHER STATE ONE CALL
Twin City Area 651-454-0002
Mn. Toll Free 1-800-252-1166

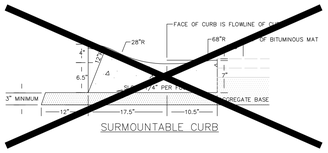

SURMOUNTABLE CURB

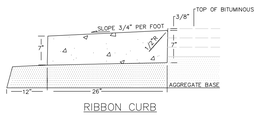

RIBBON CURB

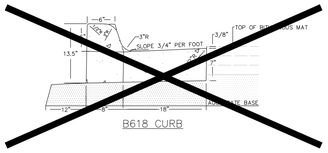

B618 CURB

NOTES:
1. FOR CATCH BASIN TRANSITIONS SEE PLATE NO. STR-07.
2. EXPANSION SHALL BE PLACED EVERY 200 LF, AT ALL CATCH BASIN TRANSITIONS, AND AT ALL BEGINNING RADII.
3. CONTRACTION JOINTS SHALL BE PLACED EVERY 10 FEET.
4. FOUR #4 REINFORCING RODS, TWO PER SIDE, AT ALL CATCH BASINS, MINIMUM 10 FEET.
5. ONE #4 REINFORCING ROD IN FRONT OF CASTING, MINIMUM 5 FEET FOR SURMOUNTABLE CURB.

CURB & GUTTER
CITY OF INVER GROVE HEIGHTS ENGINEERING DEPARTMENT | 1/17 | PLATE NO. STR-06

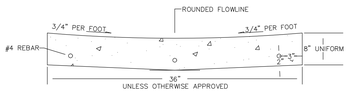

CONCRETE SWALE – SECTION A-A

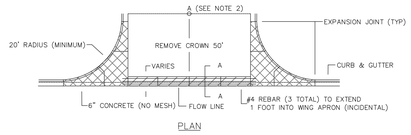

PLAN

1. CONCRETE PANELS SHALL NOT EXCEED 10' IN ANY DIRECTION
2. POINT "A" SHALL BE A MINIMUM OF 4 INCHES ABOVE THE FLOWLINE.

PAID AS 6" WING APRON

PAID AS CONCRETE VALLEY GUTTER

TYPICAL VALLEY GUTTER
CITY OF INVER GROVE HEIGHTS ENGINEERING DEPARTMENT | 3/15 | PLATE NO. STR-05

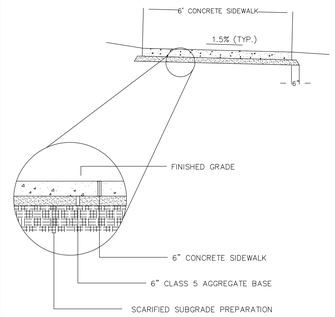

CONCRETE PANELS SHALL NOT EXCEED 6' IN ANY DIRECTION

CONCRETE SIDEWALK
CITY OF INVER GROVE HEIGHTS ENGINEERING DEPARTMENT | 3/19 | PLATE NO. STR-19

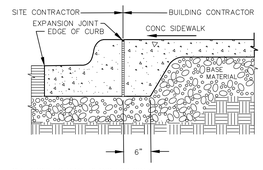

SEE ARCHITECTURAL PLANS FOR WALK SCORING AND JOINT LAYOUT.

Westwood | CONCRETE CURB AT SIDEWALK | LAST REVISED: 03/03/08 | SI24

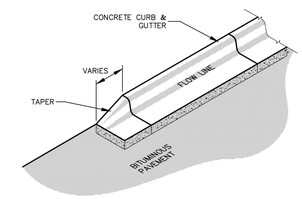

PERSPECTIVE

Westwood | CURB TAPER | LAST REVISED: 06/13/19 | SIXX-C

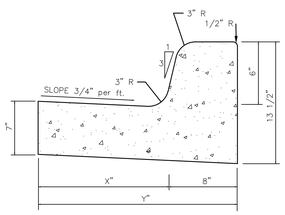

NOTE: EXPANSION JOINT SPACING IS 100' MIN. 3" CL. 5 UNDER C.&G.

Curb Type	X	Y
B612	12"	20"
B618	18"	26"
B624	24"	32"

Westwood | B6 STYLE CURB AND GUTTER | LAST REVISED: 03/03/08 | SI01

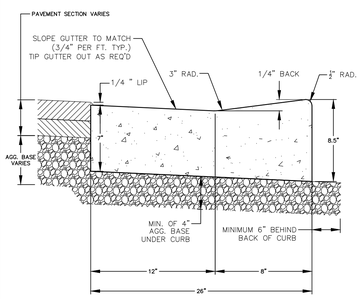

Westwood | FLUSH CURB AND GUTTER | LAST REVISED: SIXX

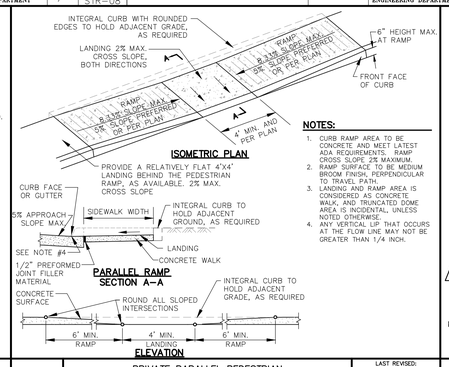

ISOMETRIC PLAN

PARALLEL RAMP SECTION A-A

ELEVATION

NOTES:
1. CURB RAMP AREA TO BE CONCRETE AND MEET LATEST ADA REQUIREMENTS. RAMP CROSS SLOPE 2% MAXIMUM.
2. RAMP SURFACE TO BE MEDIUM BROOM FINISH, PERPENDICULAR TO TRAVEL PATH.
3. LANDING AND RAMP AREA IS CONSIDERED AS CONCRETE WALK, AND TRUNCATED DOME AREA IS INCIDENTAL, UNLESS NOTED OTHERWISE.
4. ANY VERTICAL LIP THAT OCCURS AT THE FLOW LINE MAY NOT BE GREATER THAN 1/4 INCH.

Westwood | PRIVATE PARALLEL PEDESTRIAN CURB RAMP | LAST REVISED: 01/31/12 | SI10-CP

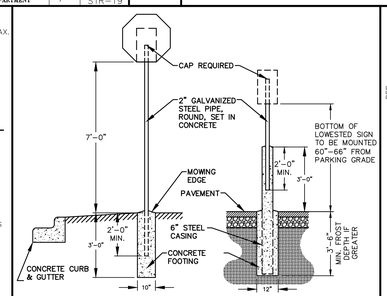

SIGN INSTALLED IN LANDSCAPE AREA

HANDICAP STALL PARKING SIGN INSTALLED IN PARKING LOT

NOTE:
1. SIGN TO BE 2-SIDED WHERE HANDICAP PARKING STALLS FACE ONE ANOTHER.
2. PARKING GRADE IS DEFINED AS EITHER FLOW LINE OF CURB OR PAVEMENT SURFACE AT HEAD OF STALL.

Westwood | SIGN POST INSTALLATION | LAST REVISED: 06/01/19 | SI14

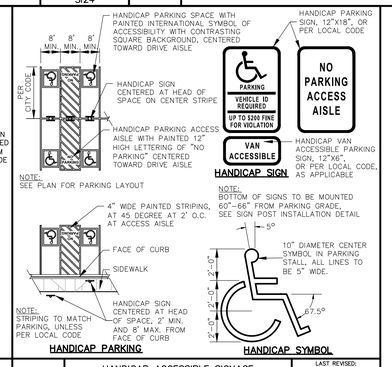

NOTE: SEE PLAN FOR PARKING LAYOUT

NOTE: STRIPING TO MATCH PARKING, UNLESS PER LOCAL CODE

HANDICAP PARKING

NOTE: BOTTOM OF SIGNS TO BE MOUNTED 60"-66" FROM PARKING GRADE. SEE SIGN POST INSTALLATION DETAIL

HANDICAP SYMBOL

Westwood | HANDICAP ACCESSIBLE SIGNAGE AND STRIPING | LAST REVISED: 06/01/19 | SI15-C

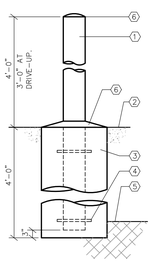

1. 4" DIAMETER STD. STL. PIPE CONCRETE FILLED. @ DRIVE-THRU ONLY, 6" @ ALL OTHER LOCATIONS INCLUDING UTILITIES, TRASH ENCLOSURE, AND SPRINKLER RISERS. PROVIDE 1/4" WELDED CLOSURE PLATE AT BOTTOM. (PAINTED EXPOSED PIPE YELLOW SECURITY BOLLARDS TO RECIEVE POLYETHYLENE COVER).
2. TOP OF PAVEMENT.
3. 24" DIA. CONCRETE FOUNDATION. USE SONOTUBE FORM.
4. 3/8" DIAMETER WELDED HOOPS. 18" DIAMETER TOP, BOTTOM AND CENTER.
5. SOLID UNDISTURBED SOIL.
6. PROVIDE PITCH, SMOOTH CONCRETE FINISH.

Westwood | BOLLARD | LAST REVISED: 03/03/08 | SI18

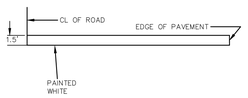

Westwood | PAINTED STOP BAR | LAST REVISED: XX/XX/XX | STR-XX

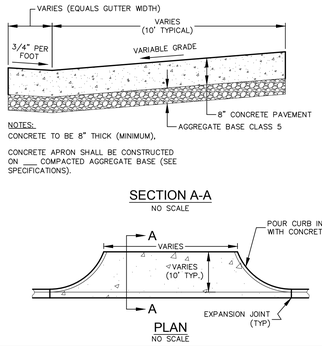

NOTES:
CONCRETE TO BE 8" THICK (MINIMUM).

CONCRETE APRON SHALL BE CONSTRUCTED ON ___ COMPACTED AGGREGATE BASE (SEE SPECIFICATIONS).

SECTION A-A
NO SCALE

PLAN
NO SCALE

Westwood | CONCRETE DRIVEWAY APRON – COMMERCIAL | LAST REVISED: 05/13/15 | SIXX-C

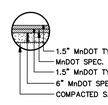
1.5" MnDOT TYPE SPWEA340E WEARING COURSE
MnDOT SPEC. 2357 BITUMINOUS TACK COAT
1.5" MnDOT TYPE SPNWA330E BASE COURSE
6" MnDOT SPEC. 3138 CLASS 5, 100% CRUSHED AGGREGATE BASE
COMPACTED SAND SUBGRADE (100% STANDARD PROCTOR)

REFER TO GEOTECHNICAL REPORT FOR ADDITIONAL REQUIREMENTS FOR PAVEMENT SECTIONS IN CLAY FILL SECTIONS.

STANDARD DUTY PAVEMENT SECTION

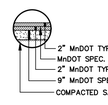
2" MnDOT TYPE SPWEA340E WEARING COURSE
MnDOT SPEC. 2357 BITUMINOUS TACK COAT
2" MnDOT TYPE SPNWA330E BASE COURSE
9" MnDOT SPEC. 3138 CLASS 5, 100% CRUSHED AGGREGATE BASE
COMPACTED SAND SUBGRADE (100% STANDARD PROCTOR)

REFER TO GEOTECHNICAL REPORT FOR ADDITIONAL REQUIREMENTS FOR PAVEMENT SECTIONS IN CLAY FILL SECTIONS.

HEAVY DUTY PAVEMENT SECTION

Westwood | PAVEMENT SECTIONS | LAST REVISED: 11/03/15 | SI19

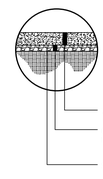
7" 4000 PSI TYPE 1 CONCRETE
6" COMPACTED CL. 5 AGGREGATE BASE, MNDOT 3138, 2211
SURFACE COMPACTION

NOTES:

CONCRETE SHALL BE REINFORCED WITH WELDED WIRE FABRIC OR REINFORCING BARS TO ASSIST IN CONTROLLING CRACKING FROM DRYING SHRINKAGE AND THERMAL CHANGES.

SAWED OR FORMED CONTROL JOINTS SHOULD BE INCLUDED FOR EACH 225 SQUARE FEET OF AREA OR LESS (15 FEET BY 15 FEET). CONTRACTOR SHALL PREPARE JOINTING PATTERN AND SUBMIT TO ENGINEER PRIOR TO CONSTRUCTION.

SAW CUTS SHOULD NOT CUT THROUGH THE WELDED WIRE FABRIC OR REINFORCING STEEL AND DOWELS SHOULD BE UTILIZED AT FORMED AND/OR COLD JOINTS.

DOWLES SHALL BE UTILIZED AT FORMED AND/OR COLD JOINTS. DOWLES SHALL BE 30" LONG 1" DIAMETER SMOOTH AND GREASED TIE BARS AT 30" SPACING, MINIMUM 18" FROM PAVEMENT EDGE.

Westwood | HEAVY DUTY CONCRETE SECTION LOADING DOCK | LAST REVISED: 03/03/08 | SI21

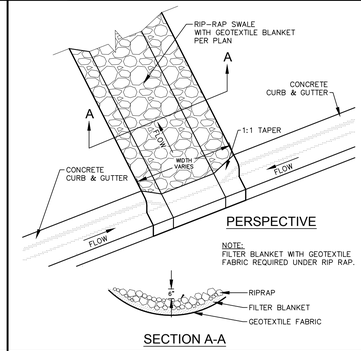

PERSPECTIVE

NOTE:
FILTER BLANKET WITH GEOTEXTILE FABRIC REQUIRED UNDER RIP RAP.

SECTION A-A

Westwood | CURB CUT WITH RIP-RAP SWALE | LAST REVISED: 05/13/15 | SIXX-C

POPE ARCHITECTS
1255 ENERGY PARK DRIVE
ST. PAUL, MN 55108-5118
PH. (651) 642-9200
FAX (651) 642-1101

UNITED PROPERTIES

RJRyan
Commercial Design and Construction
R.J. Ryan Construction, Inc.
1100 Mendota Heights Road
Mendota Heights, MN 55120
Ph. (651) 681-0200 Fax (651) 681-0235

INVERPOINT BUSINESS CENTER

INVER GROVE HEIGHTS, MINN.

Revisions:

I hereby certify that this plan was prepared by me or under my direct supervision and that I am a duly licensed PROFESSIONAL ENGINEER under the laws of the State of Minnesota.

DAVID T. BADE
Date: 12/07/20 License No. .

Designed:
Checked:
Drawn:
Record Drawing by/date:

SITE DETAILS

Date: 12/07/20 Sheet: C501

0023568.30DT.dwg

©2020 Westwood Professional Services, Inc.
Call 48 Hours before digging:
GOPHER STATE ONE CALL
Twin City Area 651-454-0002
Mn. Toll Free 1-800-252-1166

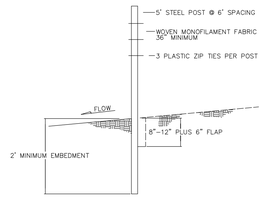

MACHINE SLICED SILT FENCE

NOTES:
1. WOOD POSTS MAY BE USED IN NON-CRITICAL AREAS. WOOD POST SPACING AT 4' MAXIMUM. STEEL POSTS ARE REQUIRED WHEN HEAVY DUTY SILT FENCE IS SPECIFIED.
2. SILT FENCE MUST BE CLEANED OR REPLACED WHEN SILT DEPTH IS 1/3 HEIGHT OF FABRIC.

SILT FENCE

CITY OF INVER GROVE HEIGHTS ENGINEERING DEPARTMENT	4/11	PLATE NO. EC-02

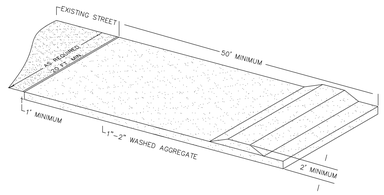

NOTES:
1. ROCK CONSTRUCTION ENTRANCE SHALL BE CONSTRUCTED PRIOR TO CONSTRUCTION ACTIVITY.
2. FOR RESIDENTIAL CONSTRUCTION, CLASS 5 MAY BE INSTALLED AS A ROCK CONSTRUCTION ENTRANCE
3. AGGREGATE SHALL BE CLEANED, MAINTAINED, OR REPLENISHED AS NECESSARY.
4. SILT TRACKED ONTO THE STREET SHALL BE SWEPT THE SAME DAY BY A WATER BASED SWEEPER.
5. LENGTH MAY BE MODIFIED AND 1' HIGH RIDGE MAY BE ELIMINATED FOR RESIDENTIAL CONSTRUCTION.

ROCK CONSTRUCTION ENTRANCE

CITY OF INVER GROVE HEIGHTS ENGINEERING DEPARTMENT	4/11	PLATE NO. EC-03

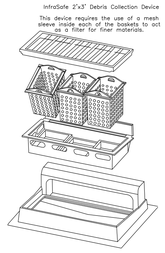

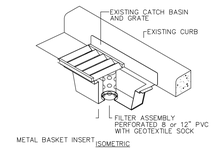

METAL BASKET TYPE

NOTES:
1. EACH STORM WATER INLET REQUIRES AN APPROVED INLET PROTECTION DEVICE FROM THE TIME THE CASTING AND RINGS ARE PLACED UNTIL THE SURROUNDING AREAS ARE ESTABLISHED, OR UNTIL DIRECTED BY THE CITY ENGINEER.
2. THESE DEVICES SHALL BE REMOVED WHEN THERE IS FROST IN THE GROUND AND REINSTALLED WHEN THE GROUND THAWS.
3. THE CONTRACTOR IS RESPONSIBLE FOR THE PLACEMENT, MAINTENANCE, AND REMOVAL OF ALL INLET PROTECTION DEVICES.
4. SEALING THE SORM SEWER INLET WITH FABRIC IS NOT AN APPROVED METHOD OF INLET PROTECTION.

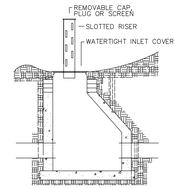

SLOTTED RISER INLET FILTER

STORM SEWER INLET PROTECTION

CITY OF INVER GROVE HEIGHTS ENGINEERING DEPARTMENT	4/11	PLATE NO. EC-04

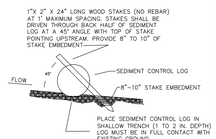

TYPES: STRAW, WOOD FIBER, OR COIR

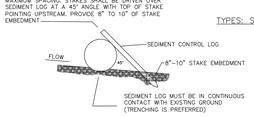

TYPES: WOOD CHIP, COMPOST, OR ROCK

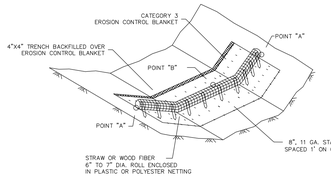

POINT "A" SHALL BE A MINIMUM OF 6 INCHES HIGHER THAN POINT "B" TO ENSURE WATER FLOWS OVER THE BIOROLL AND DOES NOT FLAWK THE EDGES AND CAUSE EROSION.

DITCH CHECK SPACING SHALL BE DETERMINED FROM THE FOLLOWING FORMULA:
APPROXIMATE SPACING OF DITCH CHECKS (FT) = $\frac{\text{DITCH CHECK HEIGHT (FT)}}{\text{\% CHANNEL SLOPE}} \times 100$

SEDIMENT LOG INSTALLATION

CITY OF INVER GROVE HEIGHTS ENGINEERING DEPARTMENT	3/15	PLATE NO. EC-07

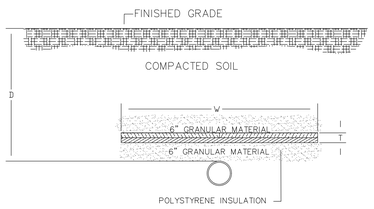

DEPTH TO TOP OF PIPE D	WIDTH OF INSULATION W	THICKNESS OF INSULATION T
2'-3'	12'	4"
3'-4'	10'	4"
4'-5'	8'	4"
5'-6'	6'	2"
6'-7'	4'	2"
7'+	NONE	NONE

NOTE:
1. INSULATION SHALL BE EXTRUDED RIGID BOARD MATERIAL HAVING A THERMAL CONDUCTIVITY OF 0.23 BTU/HR/SQUARE FOOT/DEGREE FAHRENHEIT/PER INCH OF THICKNESS MAXIMUM AT 40° F MEAN, A COMPREHENSIVE STRENGTH OF 35 PSI MINIMUM AND WATER ABSORPTION OF .25 PERCENT BY VOLUME MAXIMUM.
2. UTILITIES WITH SEPERATION UNDER 30" REQUIRE 4" INSULATION, 8' WIDE

INSULATION DETAIL

CITY OF INVER GROVE HEIGHTS ENGINEERING DEPARTMENT	4/11	PLATE NO. MISC-02

CLASS A
LOAD FACTOR 2.3

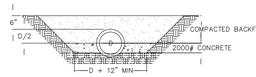

CLASS B
LOAD FACTOR 1.9
HAND SHAPED FROM ANGULAR BEDDING MATERIAL

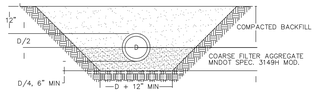

CLASS C-1
LOAD FACTOR 1.5
HAND SHAPED FROM ANGULAR BEDDING MATERIAL

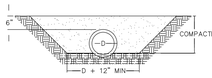

CLASS C-2
LOAD FACTOR 1.5
HAND SHAPED FROM ANGULAR BEDDING MATERIAL

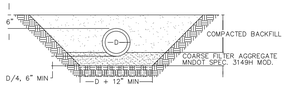

BEDDING METHODS RCP AND DIP

CITY OF INVER GROVE HEIGHTS ENGINEERING DEPARTMENT	4/11	PLATE NO. MISC-03

PIPE FOUNDATION AND BEDDING IN GOOD SOILS

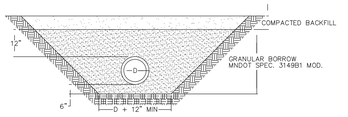

PIPE FOUNDATION AND BEDDING IN POOR SOILS

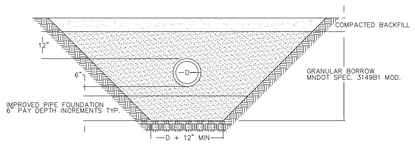

BEDDING METHODS PVC

CITY OF INVER GROVE HEIGHTS ENGINEERING DEPARTMENT	4/11	PLATE NO. MISC-04

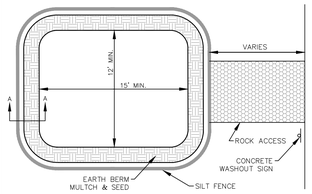

NOTE:
CONCRETE WASHOUT AREAS WILL HAVE AN IMPERMEABLE LINER TO PREVENT CONCRETE WASHOUT WATER FROM INFILTRATING/CONTACTING WITH SOIL.
IMPERMEABLE LINER INCLUDES 10 MIL POLYLINER.
WASHOUT SYSTEMS CAN BE USED AS ALTERNATE WASHOUT AREAS.

SECTION A-A

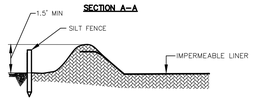

Westwood	CONCRETE WASHOUT AREA	LAST REVISED: 09/29/08 GD08

CATEGORY OF BLANKET	STAPLE LENGTH
00	5"
0	5"
1	4"
2	4"
3	6"
4	6"
5	5"
6	5"
7	5"

SPACING FOR STAPLES

SLOPE RATIO	STAPLES/YARD
2:1 (H:V)>	1.2 STAPLES
2:1 – 1:1	1.7 STAPLES

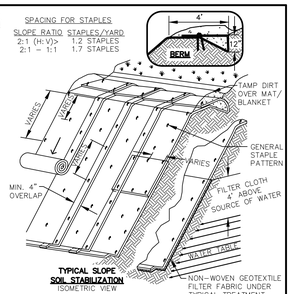

TYPICAL SLOPE SOIL STABILIZATION
ISOMETRIC VIEW

WET SLOPE LINING

NOTE:
1. MATS/BLANKETS SHOULD BE INSTALLED VERTICALLY DOWNSLOPE.
2. SLOPE SURFACE SHALL BE FREE OF ROCKS, CLODS, STICK AND GRASS.
3. MATS/BLANKETS SHALL HAVE GOOD SOIL CONTACT.
4. LAY BLANKETS LOOSELY AND STAKE OR STAPLE TO MAINTAIN DIRECT CONTACT WITH THE SOIL.
5. DO NOT STRETCH.

Westwood	TEMPORARY EROSION BLANKETS TURF REINFORCEMENT MATS FOR SLOPES	LAST REVISED: 03/20/08 GD21

POPE ARCHITECTS
1255 ENERGY PARK DRIVE
ST. PAUL, MN 55108-5118
PH. (651) 642-9200
FAX (651) 642-1101

UNITED PROPERTIES

RJRyan
Commercial Design and Construction
R.J. Ryan Construction, Inc.
1100 Mendota Heights Road
Mendota Heights, MN 55120
Ph. (651) 681-0200 Fax (651) 681-0235

INVERPOINT BUSINESS CENTER

INVER GROVE HEIGHTS, MINN.

Revisions:

I hereby certify that this plan was prepared by me or under my direct supervision and that I am a duly licensed PROFESSIONAL ENGINEER under the laws of the State of Minnesota.

DAVID T. BADE
Date: 12/07/20 License No. *

Designed:
Checked:
Drawn:
Record Drawing by/date:

EROSION CONTROL AND SANITARY DETAILS

Date: 12/07/20 Sheet: C502

0023568.30DT.dwg

©2020 Westwood Professional Services, Inc.
Call 48 Hours before digging:
GOPHER STATE ONE CALL
Twin City Area 651-454-0002
Mn. Toll Free 1-800-252-1166

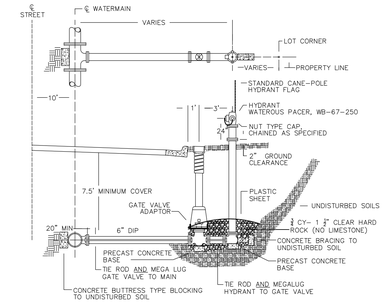

NOTES:
1. ALL HYDRANTS MUST BE 8.0' BURY UNLESS SHOWN OTHERWISE.
2. HYDRANT VALVES TO BE LOCATED 3' FROM HYDRANT.
3. GATE VALVES TO CONFORM WITH AWWA C509-80 STANDARDS.
4. TIE RODS TO BE 5/8" DIAMETER THREADED STEEL.
5. ALL TIE RODS TO BE SPRAYED WITH A BITUMINOUS COAL TAR PROTECTIVE COATING I.E. LOCTITE HEAVY DUTY RUBBERIZED UNDERCOATING, OR APPROVED EQUAL.
6. ALL WATERMAIN BOLTS ARE CORE-BLUE OR APPROVED EQUAL.
7. POURED CONCRETE OR PRECAST BLOCKS TO BE USED FOR BRACING. (NO WOOD, CURBING, SIDEWALK, ETC.)
8. ALL JOINTS MUST BE RESTRAINED. GATE VALVE TO BE RODDED TO MAIN. HYDRANT TO BE RODDED TO GATE VALVE. HYDRANT SHALL NOT BE RODDED TO MAIN
9. VERTICAL OFFSETS ARE NOT PERMITTED WITHOUT PERMISSION OF THE ENGINEER.

HYDRANT INSTALLATION

CITY OF INVER GROVE HEIGHTS ENGINEERING DEPARTMENT	3/15	PLATE NO. WTR-01

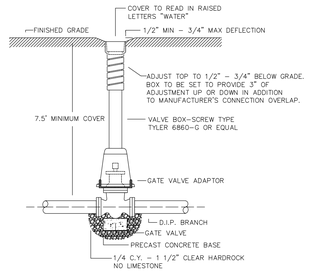

NOTES:
1. HYDRANT, STUB, & SERVICE VALVES SHALL BE RODDED TO THE MAIN.
2. GATE VALVES TO CONFORM WITH AWWA C509-80 STANDARDS.
3. TIE RODS TO BE 5/8" DIAMETER THREADED STEEL.
4. ALL TIE RODS TO BE SPRAYED WITH A BITUMINOUS COAL TAR PROTECTIVE COATING I.E. LOCTITE HEAVY DUTY RUBBERIZED UNDERCOATING, OR APPROVED EQUAL.
5. ALL WATERMAIN BOLTS ARE CORE-BLUE OR APPROVED EQUAL.
6. NO INSIDE ADJUSTMENT SECTIONS ALLOWED (IE. NO INSERTS).
7. MARKING POST SHALL BE INSTALLED AT ALL GATE VALVES LOCATED OUTSIDE OF STREET SECTIONS. SEE PLATE NO. MISC-01.

VALVE BOX INSTALLATION

CITY OF INVER GROVE HEIGHTS ENGINEERING DEPARTMENT	2/14	PLATE NO. WTR-02

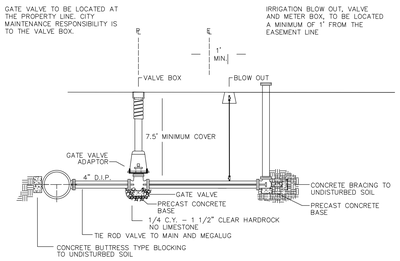

NOTES:
1. GATE VALVES TO CONFORM WITH AWWA C509-80 STANDARDS.
2. TIE RODS TO BE 5/8" DIAMETER THREADED STEEL.
3. ALL TIE RODS TO BE SPRAYED WITH A BITUMINOUS COAL TAR PROTECTIVE COATING I.E. LOCTITE HEAVY DUTY RUBBERIZED UNDERCOATING, OR APPROVED EQUAL.
4. ALL WATERMAIN BOLTS ARE CORE-BLUE OR APPROVED EQUAL.
5. POURED CONCRETE OR PRECAST BLOCKS TO BE USED FOR BRACING. (NO WOOD, CURBING, SIDEWALK, ETC.)
6. ALL JOINTS MUST BE RESTRAINED.
7. THE 4" DIP RISERS SHALL BE EXPOSED 18" ABOVE THE CONCRETE SLAB. RISERS SHALL HAVE A PLAIN END AND CONTAIN A 4" FLANGE AND PLUG.
8. THE BLOW PIPE AND 4" RISER SHALL BE TESTED WITH THE WATERMAIN.

4" IRRIGATION SERVICE

CITY OF INVER GROVE HEIGHTS ENGINEERING DEPARTMENT	9/15	PLATE NO. WTR-04A

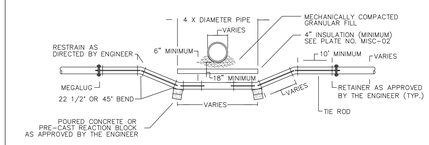

NOTE:
1. ALL TIE RODS TO BE SPRAYED WITH A BITUMINOUS COAL TAR PROTECTIVE COATING (I.E. LOCTITE HEAVY DUTY RUBBERIZED UNDERCOATING OR APPROVED EQUAL)
2. TIE RODS TO BE 5/8" DIAMETER THREADED STEEL.
3. ALL WATERMAIN BOLTS ARE CORE-BLUE OR APPROVED EQUAL.
4. PVC MEGALUGS WILL BE USED ON ALL CAST IRON PIPE.

WATERMAIN ADJUSTMENT

CITY OF INVER GROVE HEIGHTS ENGINEERING DEPARTMENT	3/11	PLATE NO. WTR-05

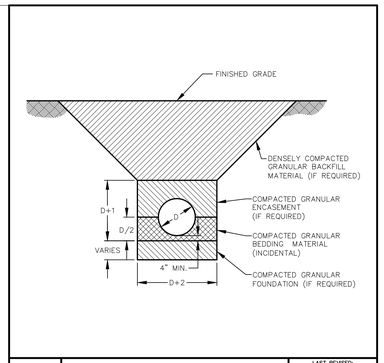

Westwood | WATER MAIN TRENCH | LAST REVISED: XX/XX/XX | WMXX

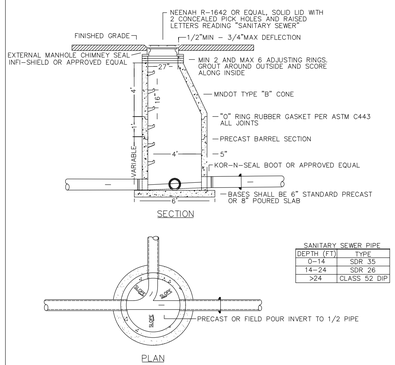

SANITARY SEWER PIPE	
DEPTH (FT)	TYPE
0-14	SDR 35
14-24	SDR 26
>24	CLASS 52 DIP

NOTES:
1. A MINIMUM FALL OF .10' ON MANHOLES THROUGH STRUCTURES AND A MINIMUM FALL OF .20' ON MANHOLES WITH 90° BENDS IS REQUIRED.
2. MANHOLES SHALL BE INSTALLED AT DISTANCES NO GREATER THAN 400' APART.
3. MANHOLE STEPS SHALL BE PLACED SO THAT OFFSET VERTICAL PORTION OF CONE IS FACING DOWNSTREAM.
4. GROUT ALL DOGHOUSES AND LIFT HOLES.
5. MARKING POSTS SHALL BE INSTALLED AT ALL MANHOLES LOCATED OUTSIDE OF STREET SECTION. SEE PLATE NO. MISC-01.
6. SERVICES SHALL NOT ENTER MANHOLES.
7. OUTSIDE DROPS ARE REQUIRED WHEN THE LOWEST AND HIGHEST INVERT ELEVATION DIFFERENCES EXCEED 2'. FOR ALL DROPS LESS THAN 2', SLOPED BENCHES ARE REQUIRED.
8. AN EXTERNAL MANHOLE CHIMNEY SEAL SHALL BE INSTALLED AROUND THE RINGS AND CASTING.

SANITARY STANDARD MANHOLE

CITY OF INVER GROVE HEIGHTS ENGINEERING DEPARTMENT	8/13	PLATE NO. SAN-01

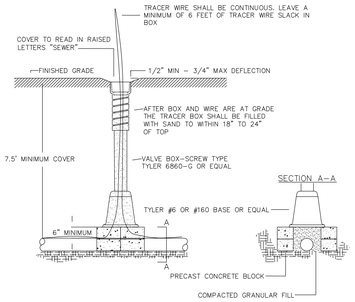

NOTES:
1. TRACER WIRE SHALL BE DIRECT BURIAL #12 AWG, STEEL CORE SOFT DRAWN HIGH STRENGTH (380#) TRACER WIRE W/30 MIL HDPE GREEN COLOR JACKET, 30 VOLT RATING (COPPERHEAD INDUSTRIES, OR ACCEPTED EQUAL)
2. EXCEPT FOR APPROVED SPLICED-IN CONNECTIONS, TRACER WIRE SHALL BE CONTINUOUS FROM END TO END.
3. SPLICED OR REPAIRED WIRE CONNECTIONS IN THE TRACER WIRE SYSTEM SHALL BE UL LISTED FOR DIRECT BURIAL, WATER AND CORROSION PROOF (DRYCONN KING, DRYCONN DIRECT BURY LUG OR ACCEPTED EQUAL). SPLIT-BOLT AND TWISTED WIRE SPLICES WILL NOT BE ACCEPTED.
4. NO INSIDE ADJUSTMENT SECTIONS ARE ALLOWED (IE. NO INSERTS)
5. MARKING POSTS SHALL BE PLACED AT ALL FORCE MAIN TRACER BOXES LOCATED OUTSIDE OF STREET SECTIONS.

FORCE MAIN TRACER WIRE BOX

CITY OF INVER GROVE HEIGHTS ENGINEERING DEPARTMENT	2/15	PLATE NO. SAN-05

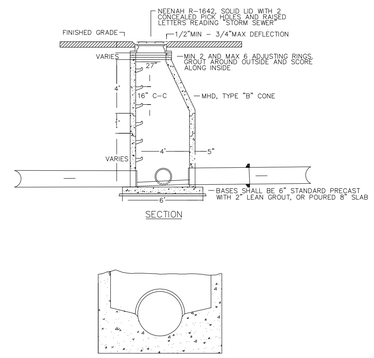

NOTES:
1. ALL MANHOLES MUST BE A MINIMUM OF 4' IN DEPTH.
2. MANHOLE STEPS SHALL BE PLACED SO THAT OFFSET VERTICAL PORTION OF CONE IS FACING DOWNSTREAM.
3. PROVIDE POURED CONCRETE INVERTS AND DOGHOUSES.
4. GROUT ALL LIFT HOLES.
5. MARKING POSTS SHALL BE INSTALLED AT ALL MANHOLES LOCATED OUTSIDE OF STREET SECTION. SEE PLATE NO. MISC-01.
6. MINIMUM 48" DIAMETER WHEN PIPE IS 36" OR SMALLER. MINIMUM 72" DIAMETER WHEN PIPE IS LARGER THAN 36"

STORM STANDARD MANHOLE

CITY OF INVER GROVE HEIGHTS ENGINEERING DEPARTMENT	8/13	PLATE NO. STM-01

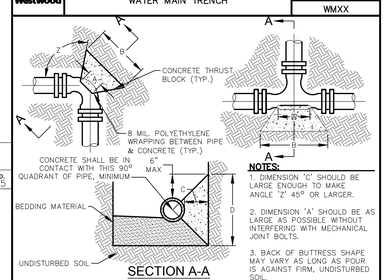

NOTES:
1. DIMENSION "C" SHOULD BE LARGE ENOUGH TO MAKE ANGLE "Z" 45° OR LARGER.
2. DIMENSION "A" SHOULD BE AS LARGE AS POSSIBLE WITHOUT INTERFERING WITH MECHANICAL JOINT BOLTS.
3. BACK OF BUTTRESS SHAPE MAY VARY AS LONG AS POUR IS AGAINST FIRM, UNDISTURBED SOIL.

BUTTRESS DIMENSIONS								
PIPE SIZE	22-1/2°		45° BEND		90°		TEE	
	B	BEND D	B	D	B	BEND D	B	D
6"	1'-5"	1'-5"	1'-5"	1'-5"	2'-1"	1'-6"	2'-1"	1'-6"
8"	1'-5"	1'-5"	2'-1"	1'-6"	2'-8"	2'-0"	2'-8"	2'-0"
10"-12"	1'-10"	1'-10"	3'-4"	2'-0"	4'-9"	2'-6"	4'-9"	2'-6"
14"-16"	3'-0"	2'-0"	3'-10"	3'-0"	6'-2"	3'-6"	6'-2"	3'-6"

THRUST BLOCK DIMENSIONS ARE BASED ON 150 PSI TEST PRESSURE AND SAFETY FACTOR OF 1.2.

Westwood | CONCRETE THRUST BLOCKING | LAST REVISED: XX/XX/XX | WMXX

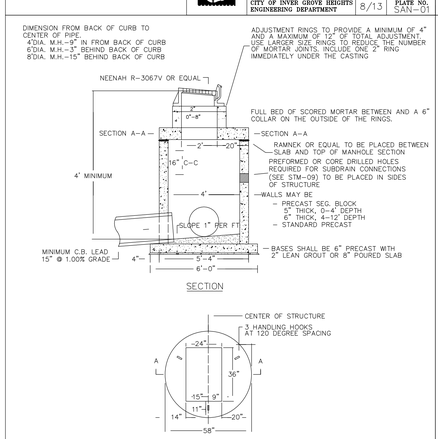

NOTES:
1. ALL CATCH BASIN/MANHOLES MUST BE A MINIMUM OF 4' IN DEPTH.
2. PROVIDE POURED CONCRETE INVERTS AND DOGHOUSES.
3. GROUT ALL LIFT HOLES.
4. DRAINTILE SHALL BE INSTALLED AT ALL CATCH BASINS. SEE PLATE NO. STM-09.
5. STEPS SHALL BE PLACE IN EITHER FRONT CORNER DEPENDING ON PIPE CONFIGURATION.

CATCH BASIN/MANHOLE WITH RECTANGULAR LID

CITY OF INVER GROVE HEIGHTS ENGINEERING DEPARTMENT	1/17	PLATE NO. STM-02

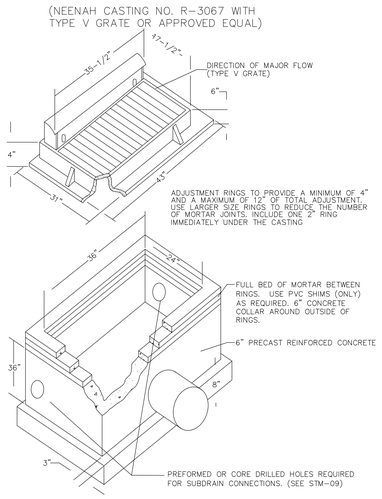

2' x 3' CATCH BASIN

CITY OF INVER GROVE HEIGHTS ENGINEERING DEPARTMENT	1/17	PLATE NO. STM-03

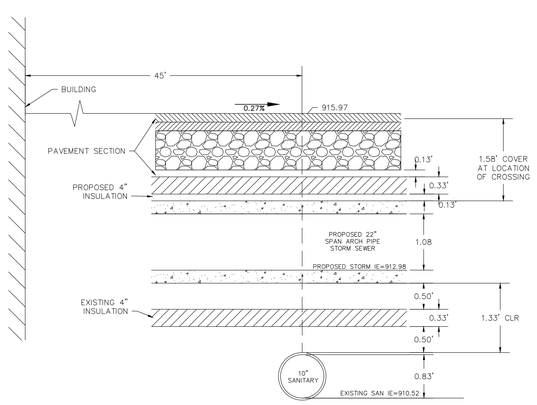

WEST ROOF DRAIN CROSSING OVER EXISTING SANITARY SEWER

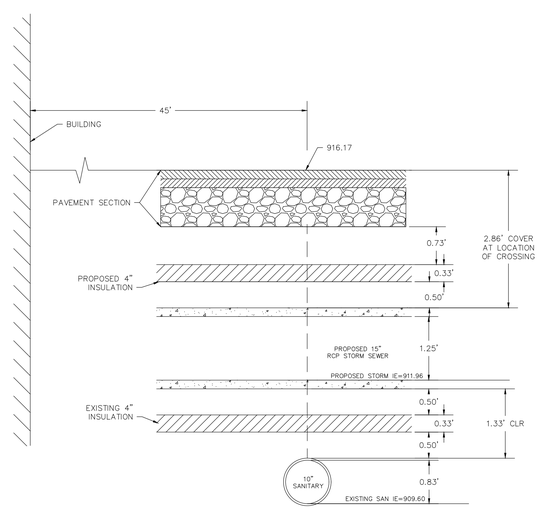

EAST ROOF DRAIN CROSSING OVER EXISTING SANITARY SEWER

POPE ARCHITECTS
1255 ENERGY PARK DRIVE
ST. PAUL, MN 55108-5118
PH. (651) 642-9200
FAX (651) 642-1101

UNITED PROPERTIES

RJRyan
Commercial Design and Construction
R.J. Ryan Construction, Inc.
1100 Mendota Heights Road
Mendota Heights, MN 55120
Ph. (651) 681-0200 Fax (651) 681-0235

INVERPOINT BUSINESS CENTER

INVER GROVE HEIGHTS, MINN.

Revisions:

I hereby certify that this plan was prepared by me or under my direct supervision and that I am a duly licensed PROFESSIONAL ENGINEER under the laws of the State of Minnesota.

DAVID T. BADE
Date: 12/07/20 License No. *

Designed:
Checked:
Drawn:
Record Drawing by/date:

WATERMAIN AND STORM SEWER DETAILS

Date: 12/07/20 Sheet: C503

0023568.30DT.dwg

© 2020 Westwood Professional Services, Inc.
Call 48 Hours before digging:
GOPHER STATE ONE CALL
Twin City Area 651-454-0002
Mn. Toll Free 1-800-252-1166

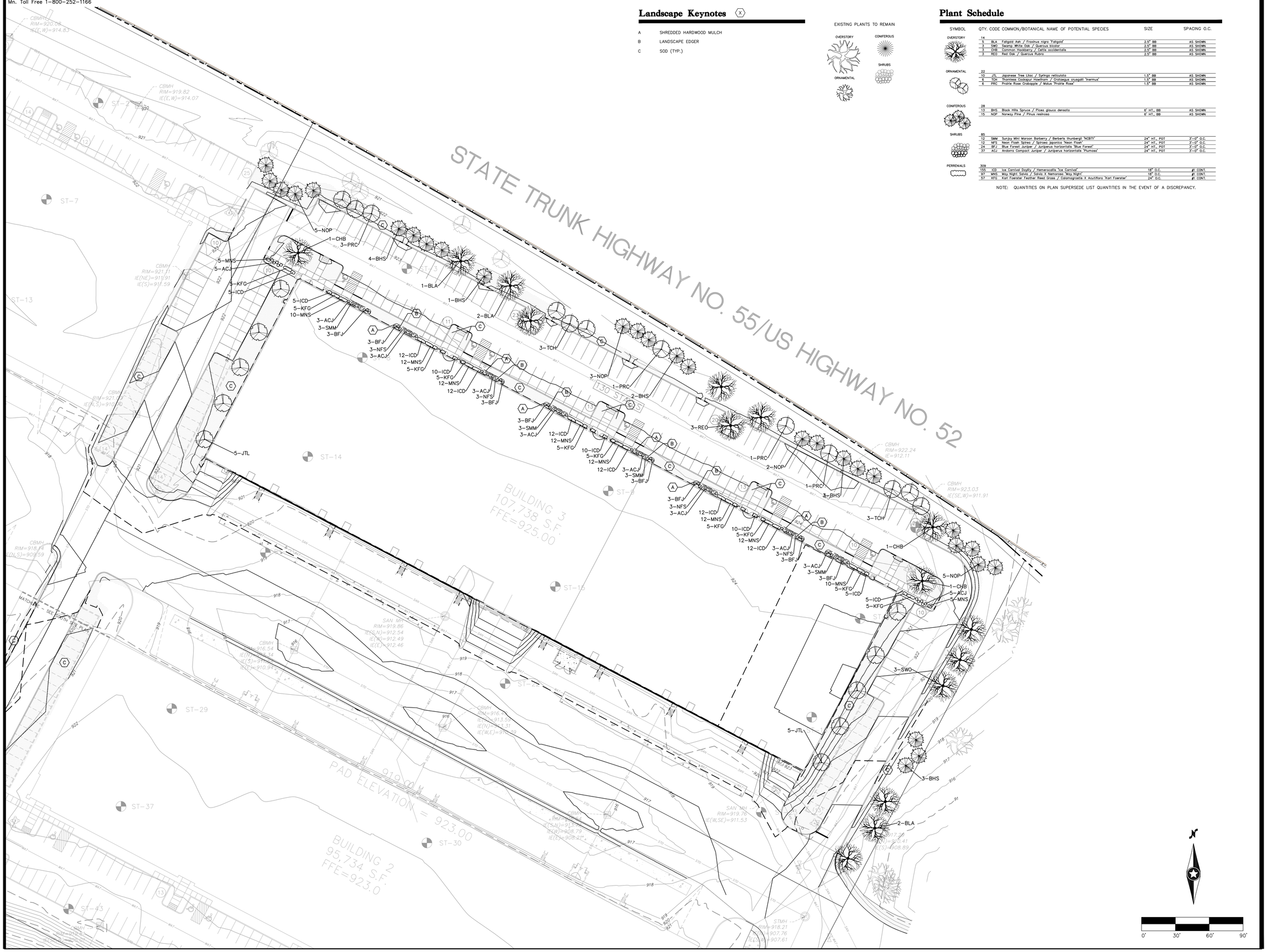

Landscape Keynotes (X)

A	SHREDDED HARDWOOD MULCH
B	LANDSCAPE EDGER
C	SOD (TYP.)

EXISTING PLANTS TO REMAIN

OVERSTORY — CONIFEROUS — ORNAMENTAL — SHRUBS

Plant Schedule

SYMBOL	QTY.	CODE	COMMON/BOTANICAL NAME OF POTENTIAL SPECIES	SIZE	SPACING O.C.
OVERSTORY	14				
	5	BLA	Fallgold Ash / Fraxinus nigra 'Fallgold'	2.5" BB	AS SHOWN
	3	SWO	Swamp White Oak / Quercus bicolor	2.5" BB	AS SHOWN
	3	CHB	Common Hackberry / Celtis occidentalis	2.5" BB	AS SHOWN
	3	REO	Red Oak / Quercus Rubra	2.5" BB	AS SHOWN
ORNAMENTAL	22				
	10	JTL	Japanese Tree Lilac / Syringa reticulata	1.5" BB	AS SHOWN
	6	TCH	Thornless Cockspur Hawthorn / Crataegus crusgalli 'Inermus'	1.5" BB	AS SHOWN
	6	PRC	Prairie Rose Crabapple / Malus 'Prairie Rose'	1.5" BB	AS SHOWN
CONIFEROUS	28				
	13	BHS	Black Hills Spruce / Picea glauca densata	6' HT., BB	AS SHOWN
	15	NOP	Norway Pine / Pinus resinosa	6' HT., BB	AS SHOWN
SHRUBS	85				
	12	SMM	Sunjoy Mini Maroon Barberry / Berberis thunbergii 'NCBT1'	24" HT., POT	3'-0" O.C.
	12	NFS	Neon Flash Spirea / Spiraea japonica 'Neon Flash'	24" HT., POT	3'-0" O.C.
	24	BFJ	Blue Forest Juniper / Juniperus horizontalis 'Blue Forest'	24" HT., POT	3'-0" O.C.
	37	ACJ	Andorra Compact Juniper / Juniperus horizontalis 'Plumosa'	24" HT., POT	3'-0" O.C.
PERRENIALS	309				
	155	ICD	Ice Carnival Daylily / Hemerocallis 'Ice Carnival'	18" O.C.	#1 CONT.
	97	MNS	May Night Salvia / Salvia X Nemorosa 'May Night'	18" O.C.	#1 CONT.
	57	KFG	Karl Foerster Feather Reed Grass / Calamagrostis X Acutiflora 'Karl Foerster'	24" O.C.	#1 CONT.

NOTE: QUANTITIES ON PLAN SUPERSEDE LIST QUANTITIES IN THE EVENT OF A DISCREPANCY.

POPE ARCHITECTS
1255 ENERGY PARK DRIVE
ST. PAUL, MN 55108-5118
PH. (651) 642-9200
FAX (651) 642-1101

UNITED PROPERTIES

RJRyan
Commercial Design and Construction
R.J. Ryan Construction, Inc.
1100 Mendota Heights Road
Mendota Heights, MN 55120
Ph. (651) 681-0200 Fax (651) 681-0235

INVERPOINT BUSINESS CENTER

INVER GROVE HEIGHTS, MINN.

Revisions:
01: .
02: .
03: .
04: .
05: .
06: .

I hereby certify that this plan was prepared by me or under my direct supervision and that I am a duly licensed PROFESSIONAL ENGINEER under the laws of the State of Minnesota.

Jeff R. Westendorf
Date: 12/07/20 License No. .

Designed: .
Checked: .
Drawn: .
Record Drawing by/date:

Date: 12/07/20 Sheet: L101

0023568.30PL.dwg

© 2020 Westwood Professional Services, Inc.
Call 48 Hours before digging:
GOPHER STATE ONE CALL
Twin City Area 651-454-0002
Mn. Toll Free 1-800-252-1166

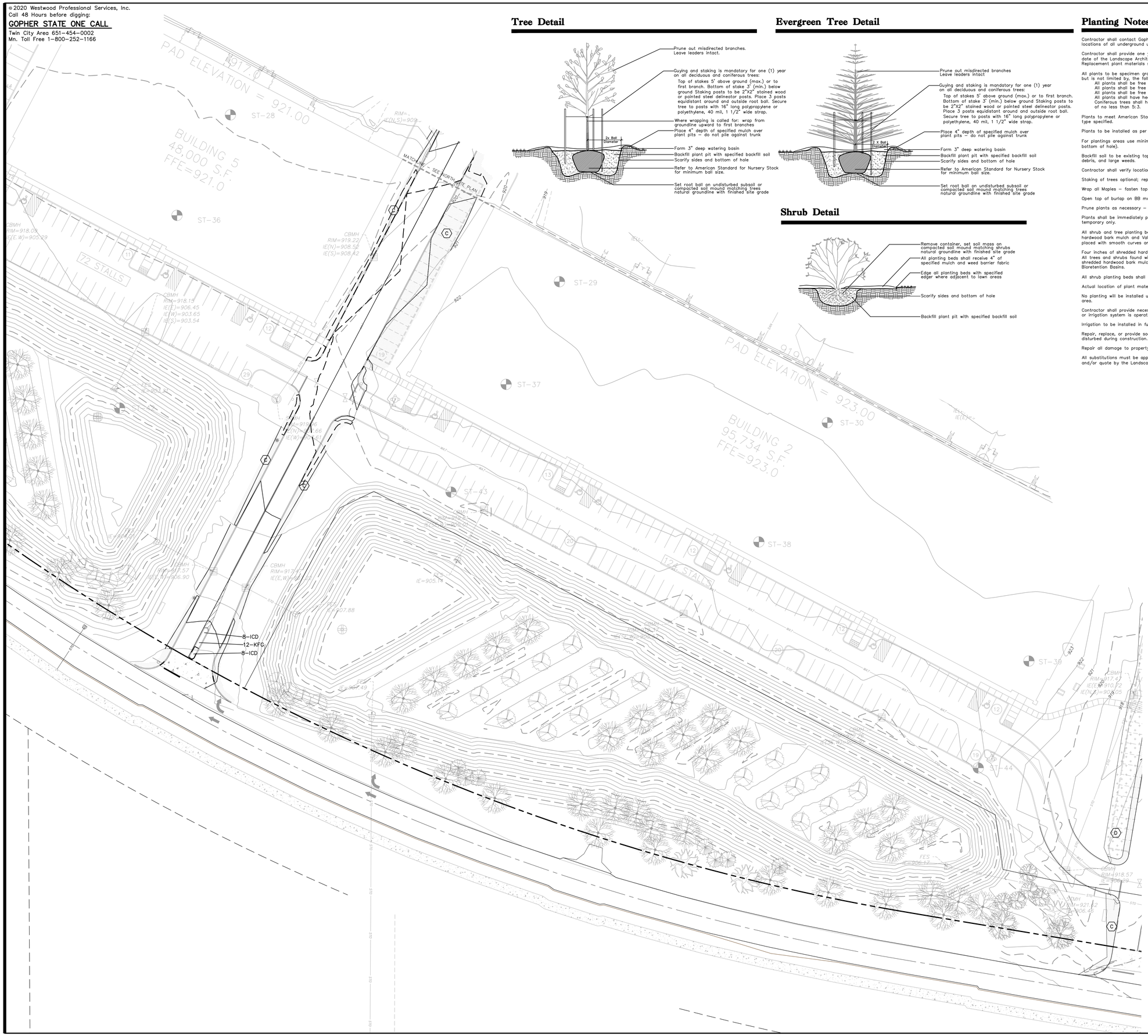

Tree Detail

Evergreen Tree Detail

Shrub Detail

Planting Notes

Contractor shall contact Gopher State "One Call" (651-454-0002 or 800-252-1166) to verify locations of all underground utilities.

Contractor shall provide one year guarantee of all plant materials. The guarantee begins on the date of the Landscape Architect's or Owner's written acceptance of the initial planting. Replacement plant materials shall also have a one year guarantee commencing upon planting.

All plants to be specimen grade, Minnesota-grown and/or hardy. Specimen grade shall adhere to, but is not limited by, the following standards:
- All plants shall be free from disease, pests, wounds, scars, etc.
- All plants shall be free from noticeable gaps, holes, or deformities.
- All plants shall be free from broken or dead branches.
- All plants shall have heavy, healthy branching and leafing.
- Coniferous trees shall have an established main leader and a height to width ratio of no less than 5:3.

Plants to meet American Standard for Nursery Stock (ANSI Z60.1-2004) requirements for size and type specified.

Plants to be installed as per standard ANSI planting practices.

For plantings areas use minimum 12" planting soil mix on trees and 6" on shrubs (sides and bottom of hole).

Backfill soil to be existing top soil from site free of roots, rocks larger than one inch, subsoil debris, and large weeds.

Contractor shall verify locations with all utilities prior to installation of plants.

Staking of trees optional; reposition, plumb and stake if not plumb after one year.

Wrap all Maples – fasten top and bottom. Remove by April 1.

Open top of burlap on BB materials; remove pot on potted plants; split and break apart peat pots.

Prune plants as necessary – per standard nursery practice and to correct poor branching.

Plants shall be immediately planted upon arrival at site. Properly heel-in materials if necessary; temporary only.

All shrub and tree planting beds, found outside of Bioretention Basins, shall have 4" of shredded hardwood bark mulch and Valley-View Black Diamond (or equal) poly edging. The edging shall be placed with smooth curves and at least 3' from the centers of evergreen trees.

Four inches of shredded hardwood bark mulch shall be used around all trees within seeded areas. All trees and shrubs found within the Bioretention Basins shall be mulched around with 4" of shredded hardwood bark mulch. No edger shall be placed around trees and shrubs found with Bioretention Basins.

All shrub planting beds shall have 4" of shredded hardwood bark mulch.

Actual location of plant material is subject to field and site conditions.

No planting will be installed until all grading and construction has been completed in the immediate area.

Contractor shall provide necessary watering of plant materials until the plants are fully established or irrigation system is operational. Owner will not provide water for Contractor for this phase.

Irrigation to be installed in future phases of construction.

Repair, replace, or provide sod as required for any roadway boulevard areas adjacent to the site disturbed during construction.

Repair all damage to property from planting operations at no cost to owner.

All substitutions must be approved by the Landscape Architect prior to submission of any bid and/or quote by the Landscape Contractor.

0' 30' 60' 90'

POPE ARCHITECTS
1255 ENERGY PARK DRIVE
ST. PAUL, MN 55108-5118
PH. (651) 642-9200
FAX (651) 642-1101

UNITED PROPERTIES

RJRyan
Commercial Design and Construction
R.J. Ryan Construction, Inc.
1100 Mendota Heights Road
Mendota Heights, MN 55120
Ph. (651) 681-0200 Fax (651) 681-0235

INVERPOINT BUSINESS CENTER

INVER GROVE HEIGHTS, MINN.

Revisons:
01:
02:
03:
04:
05:
06:

I hereby certify that this plan was prepared by me or under my direct supervision and that I am a duly licensed PROFESSIONAL ENGINEER under the laws of the State of Minnesota.

Jeff R. Westendorf

Date: 12/07/20 License No.

Designed:
Checked:
Drawn:
Record Drawing by/date:

Date: 12/07/20 Sheet: L102

0023568.30PL.dwg

©2020 Westwood Professional Services, Inc.
Call 48 Hours before digging:
GOPHER STATE ONE CALL
Twin City Area 651-454-0002
Mn. Toll Free 1-800-252-1166

Luminaire Schedule								
Symbol	Qty	Label	Arrangement	LLF	Description	Tag	BF	Lum. Watts
	27	e-wfc18a-f40z	SINGLE	0.900	E-WFC18A-F40Z	A	1.000	156.48
	2	DSX1_LED_60C_1000_40K_T2M_MVO	SINGLE	0.900	DSX1 LED 60C 1000 40K T2M MVOLT MA	B	1.000	209.28

Calculation Summary						
Label	Units	Avg	Max	Min	Avg/Min	Max/Min
North Calc	Fc	1.62	18.0	0.0	N.A.	N.A.
South Calc	Fc	2.05	5.8	0.1	20.50	58.00

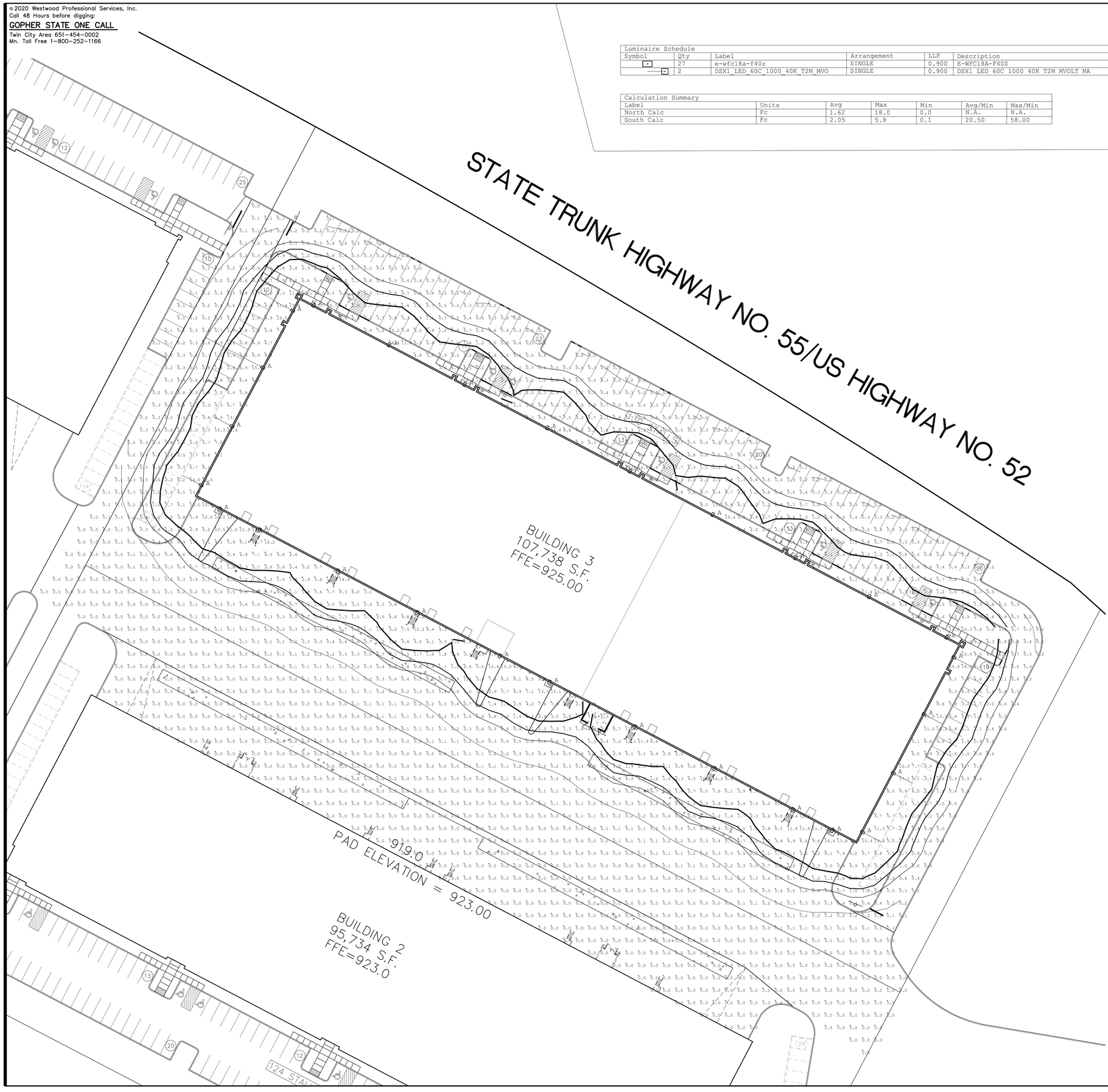

0' 30' 60' 90'

POPE ARCHITECTS
1255 Energy Park Drive
St. Paul, MN 55108-5118
Ph. (651) 642-9200
Fax (651) 642-1101

UNITED PROPERTIES

RJRyan
Commercial Design and Construction
R.J. Ryan Construction, Inc.
1100 Mendota Heights Road
Mendota Heights, MN 55120
Ph. (651) 681-0200 Fax (651) 681-0235

INVERPOINT BUSINESS CENTER

INVER GROVE HEIGHTS, MINN.

Revisions:

I hereby certify that this plan was prepared by me or under my direct supervision and that I am a duly licensed PROFESSIONAL ENGINEER under the laws of the State of Minnesota.

Date: License No.

Designed:
Checked:
Drawn:
Record Drawing by/date:

Date: Sheet:

©2020 Westwood Professional Services, Inc.
Call 48 Hours before digging:
GOPHER STATE ONE CALL
Twin City Area 651-454-0002
Mn. Toll Free 1-800-252-1166

Luminaire Schedule								
Symbol	Qty	Label	Arrangement	LLF	Description	Tag	BF	Lum. Watts
	27	e-wfc18a-f40z	SINGLE	0.900	E-WFC18A-F40Z	A	1.000	156.48
	2	DSX1_LED_60C_1000_40K_T2M_MVO	SINGLE	0.900	DSX1 LED 60C 1000 40K T2M MVOLT MA	B	1.000	209.28

Calculation Summary						
Label	Units	Avg	Max	Min	Avg/Min	Max/Min
North Calc	Fc	1.62	18.0	0.0	N.A.	N.A.
South Calc	Fc	2.05	5.8	0.1	20.50	58.00

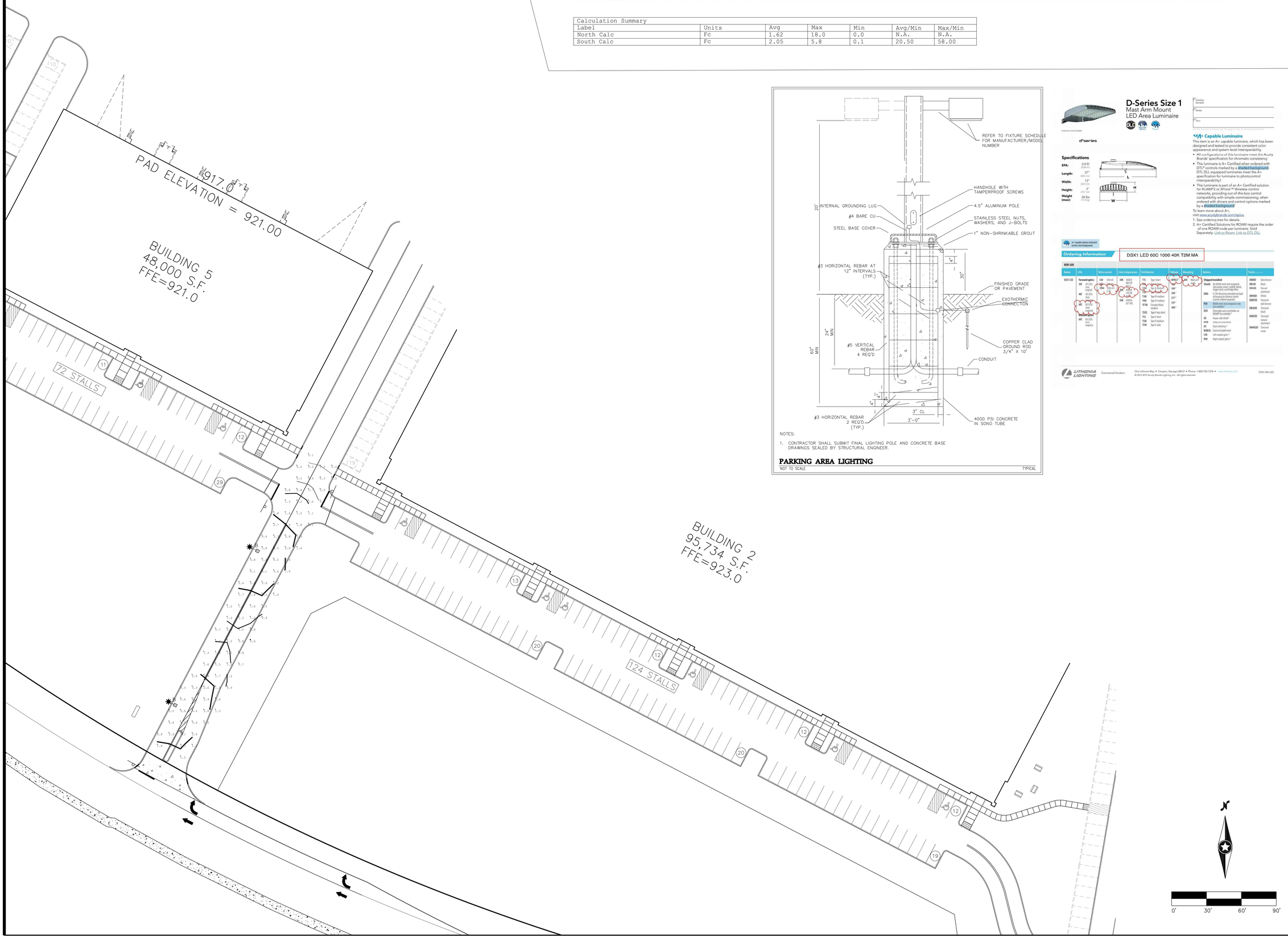

NOTES:

1. CONTRACTOR SHALL SUBMIT FINAL LIGHTING POLE AND CONCRETE BASE DRAWINGS SEALED BY STRUCTURAL ENGINEER.

PARKING AREA LIGHTING
NOT TO SCALE — TYPICAL

POPE ARCHITECTS
1255 ENERGY PARK DRIVE
ST. PAUL, MN 55108-5118
PH. (651) 642-9200
FAX (651) 642-1101

UNITED PROPERTIES

RJRyan
Commercial Design and Construction
R.J. Ryan Construction, Inc.
1100 Mendota Heights Road
Mendota Heights, MN 55120
Ph. (651) 881-0200 Fax (651) 881-0235

INVERPOINT BUSINESS CENTER

INVER GROVE HEIGHTS, MINN.

Revisions:

I hereby certify that this plan was prepared by me or under my direct supervision and that I am a duly licensed PROFESSIONAL ENGINEER under the laws of the State of Minnesota.

Date: License No.

Designed:
Checked:
Drawn:
Record Drawing by/date:

Date: Sheet:

©POPE ARCHITECTS

INVERPOINT BUSINESS PARK SECOND ADDITION

KNOW ALL PERSONS BY THESE PRESENTS: That Inverwood Business Park LLC, a Delaware limited liability company, fee owner of the following described property situated in the County of Dakota, State of Minnesota, to wit:

Lot 1, Block 1, Inverpoint Business Park First Addition, according to the recorded plat thereof, Dakota County, Minnesota.

Has caused the same to be surveyed and platted as INVERTPOINT BUSINESS PARK SECOND ADDITION.

In witness whereof said Inverwood Business Park LLC, a Delaware limited liability company, has caused these presents to be signed by United Land LLC, a Minnesota limited liability company, by its proper officers this _____ day of _____, 20__.

UNITED LAND LLC

By: _____,its_____

By: _____,its_____

STATE OF MINNESOTA
COUNTY OF _____
This instrument was acknowledged before me on _____, by _____,

_____ and by _____, _____,

of United Land LLC, a Minnesota limited liability company and manager of the Inverwood Business Park LLC, a Delaware limited liability company, on behalf of the limited liability company.

_____ (Signature) _____ (Name Printed)

Notary Public, _____ County _____

My Commission Expires _____

I, Brent R. Peters, do hereby certify that this plat was prepared by me or under my direct supervision; that I am a duly Licensed Land Surveyor in the State of Minnesota; that this plat is a correct representation of the boundary survey; that all mathematical data and labels are correctly designated on this plat; that all monuments depicted on this plat have been, or will be correctly set within one year; that all water boundaries and wet lands, as defined in Minnesota Statutes, Section 505.01, Subd. 3, as of the date of this certificate are shown and labeled on this plat; and all public ways are shown and labeled on this plat.

Dated this ___ day of _____ , 20_____ .

_____
Brent R. Peters, Licensed Land Surveyor
Minnesota License No. 44123

STATE OF MINNESOTA
COUNTY OF _____
This instrument was acknowledged before me on _____ by Brent R. Peters, Land Surveyor, Minnesota License No. 44123.

_____ (Signature)

_____ (Name Printed)

Notary Public, _____ County _____

My Commission Expires _____

CITY PLANNING COMMISSION, CITY OF INVER GROVE HEIGHTS, COUNTY OF DAKOTA, STATE OF MINNESOTA
Approved by the Planning Commission of the City of Inver Grove Heights, Minnesota, this _____ day of _____, 20__.

_____ Chair

_____ Secretary

CITY COUNCIL, CITY OF INVER GROVE HEIGHTS, COUNTY OF DAKOTA, STATE OF MINNESOTA
This plat was approved by the City Council of Inver Grove Heights, Minnesota, this _____ day of _____, 20__, and hereby certifies compliance with all requirements as set forth in Minnesota Statutes, Section 505.03. Subd. 2.

_____ Mayor

_____ Clerk

COUNTY SURVEYOR, COUNTY OF DAKOTA, STATE OF MINNESOTA
I hereby certify that in accordance with Minnesota Statutes, Section 505.021, Subd. 11, this plat has been reviewed and approved this _____ day of _____ _____, 20_____.

_____
Todd B. Tollefson
Dakota County Surveyor

DEPARTMENT OF PROPERTY TAXATION AND RECORDS, COUNTY OF DAKOTA, STATE OF MINNESOTA
Pursuant to Minnesota Statutes, Section 505.021, Subd. 9, taxes payable in the year 20___, on the land hereinbefore described have been paid. Also, pursuant to Minnesota Statutes, Section 272.12, there are no delinquent taxes and transfer entered this ___ day of _____, 20___.

_____,
Amy A. Koethe
Director, Department of Property Taxation and Records

COUNTY RECORDER, COUNTY OF DAKOTA, STATE OF MINNESOTA
I hereby certify that this plat of INVERPOINT BUSINESS PARK FIRST ADDITION was filed in the office of the County Recorder for public record on this _ day of _____ _____, 20_____, at _____ o'clock _____.M., and was duly filed in Book _____ of Plats, Page _____ , as Document Number _____.

_____
Amy A. Koethe
Dakota County Recorder

Westwood
Professional Services, Inc.

INVERPOINT BUSINESS PARK SECOND ADDITION

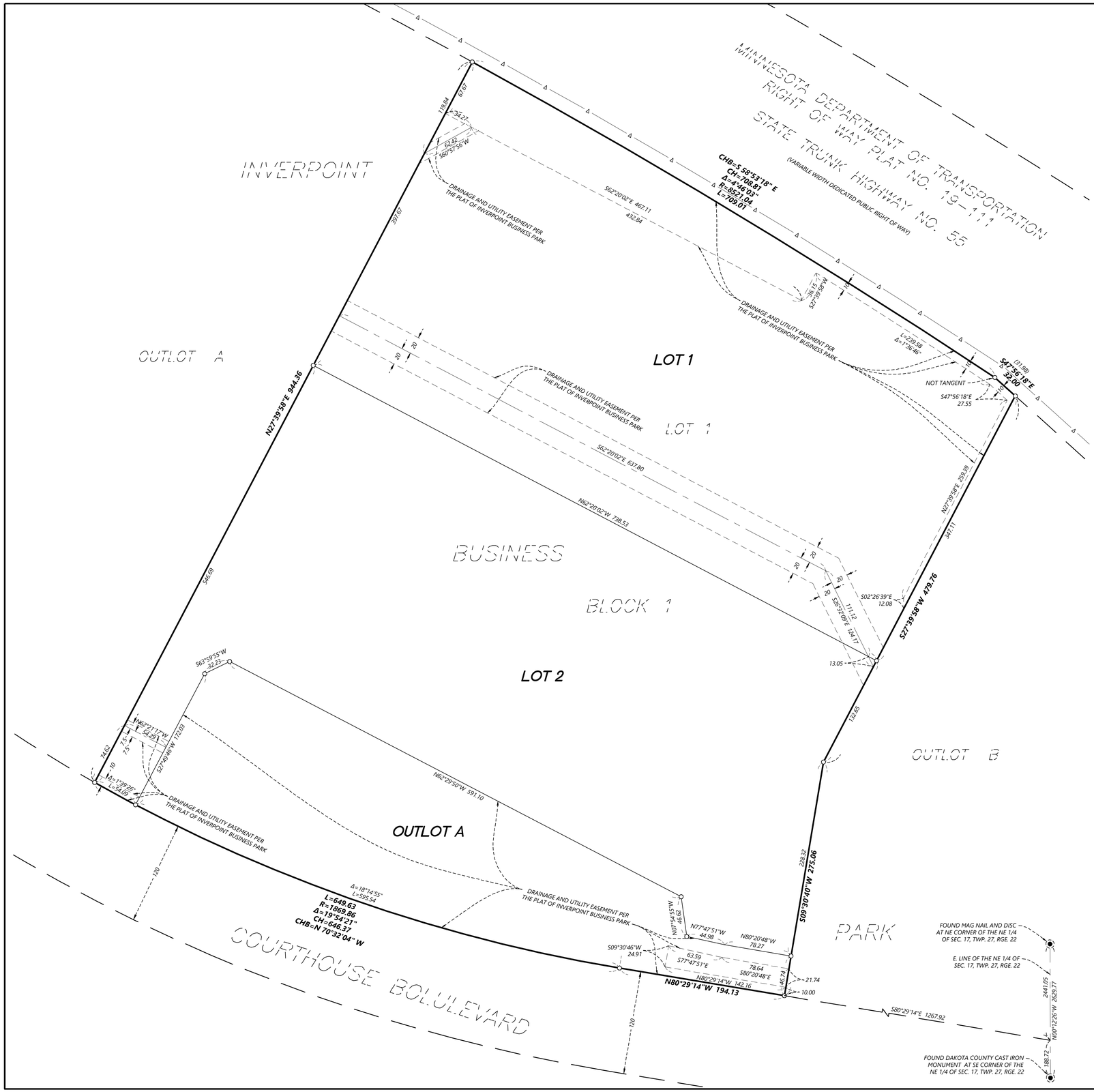

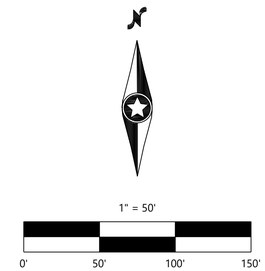

The east line of the Northeast Quarter of Section 17, Township 27, Range 22 is assumed to bear N00°12'26"W.

Denotes found XXXXX County Cast Iron Monument.

Denotes set 1/2 inch x 14 inch iron rebar marked with plastic cap inscribed LS 45873, which has been set or will be set in accordance with MS 505.021, Subd. 10. unless otherwise noted on survey.

DENOTES LIMITED ACCESS TO PUBLIC ROAD RIGHT OF WAY

NOT TO SCALE

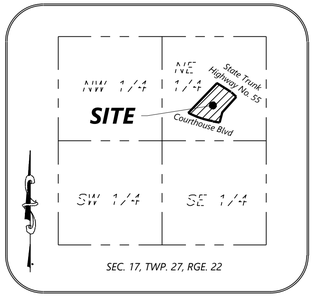

Westwood
Professional Services, Inc.

SHEET 2 OF 2 SHEETS

©2020 Westwood Professional Services, Inc.
Call 48 Hours before digging:
GOPHER STATE ONE CALL
Twin City Area 651-454-0002
Mn. Toll Free 1-800-252-1166

Luminaire Schedule								
Symbol	Qty	Label	Arrangement	LLF	Description	Tag	BF	Lum. Watts
	27	e-wfc18a-f40z	SINGLE	0.900	E-WFC18A-F40Z	A	1.000	156.48
	2	DSX1_LED_60C_1000_40K_T2M_MVO	SINGLE	0.900	DSX1 LED 60C 1000 40K T2M MVOLT MA	B	1.000	209.28

Calculation Summary						
Label	Units	Avg	Max	Min	Avg/Min	Max/Min
North Calc	Fc	1.62	18.0	0.0	N.A.	N.A.
South Calc	Fc	2.05	5.8	0.1	20.50	58.00

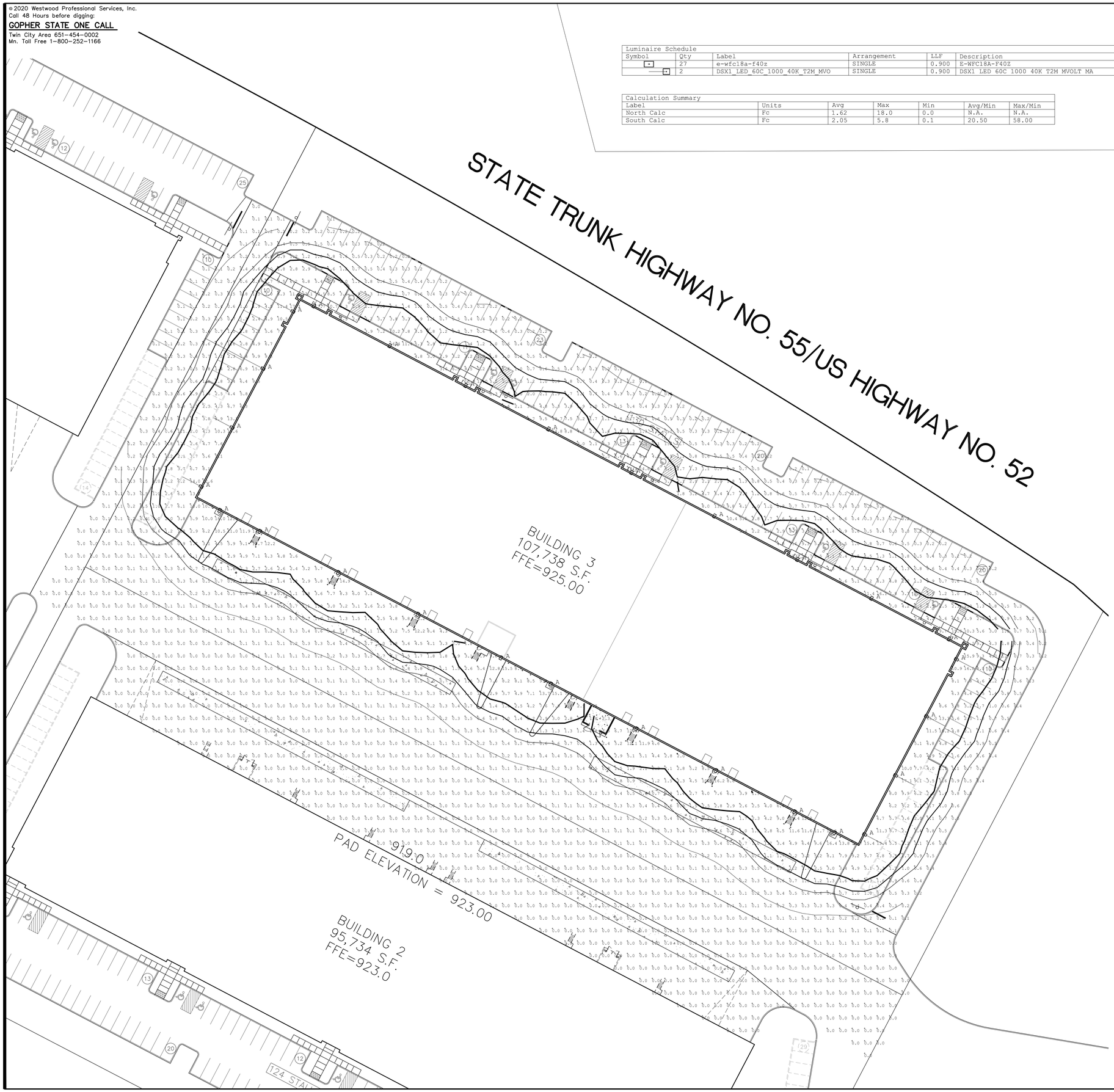

0' 30' 60' 90'

POPE ARCHITECTS
1255 Energy Park Drive
St. Paul, MN 55108-5118
Ph. (651) 642-9200
Fax (651) 642-1101

UNITED PROPERTIES

RJRyan
Commercial Design and Construction
R.J. Ryan Construction, Inc.
1100 Mendota Heights Road
Mendota Heights, MN 55120
Ph. (651) 681-0200 Fax (651) 681-0235

INVERPOINT BUSINESS CENTER

INVER GROVE HEIGHTS, MINN.

Revisions:
01:
02:
03:
04:
05:
06:

I hereby certify that this plan was prepared by me or under my direct supervision and that I am a duly licensed PROFESSIONAL ENGINEER under the laws of the State of Minnesota.

David T. Bade
Date: 12/07/20 License No.

Designed:
Checked:
Drawn:
Record Drawing by/date:

Date: 12/07/20 Sheet: E101

©2020 Westwood Professional Services, Inc.
Call 48 Hours before digging:
GOPHER STATE ONE CALL
Twin City Area 651-454-0002
Mn. Toll Free 1-800-252-1166

Luminaire Schedule								
Symbol	Qty	Label	Arrangement	LLF	Description	Tag	BF	Lum. Watts
	27	e-wfc18a-f40z	SINGLE	0.900	E-WFC18A-F40Z	A	1.000	156.48
	2	DSX1_LED_60C_1000_40K_T2M_MVO	SINGLE	0.900	DSX1 LED 60C 1000 40K T2M MVOLT MA	B	1.000	209.28

Calculation Summary						
Label	Units	Avg	Max	Min	Avg/Min	Max/Min
North Calc	Fc	1.62	18.0	0.0	N.A.	N.A.
South Calc	Fc	2.05	5.8	0.1	20.50	58.00

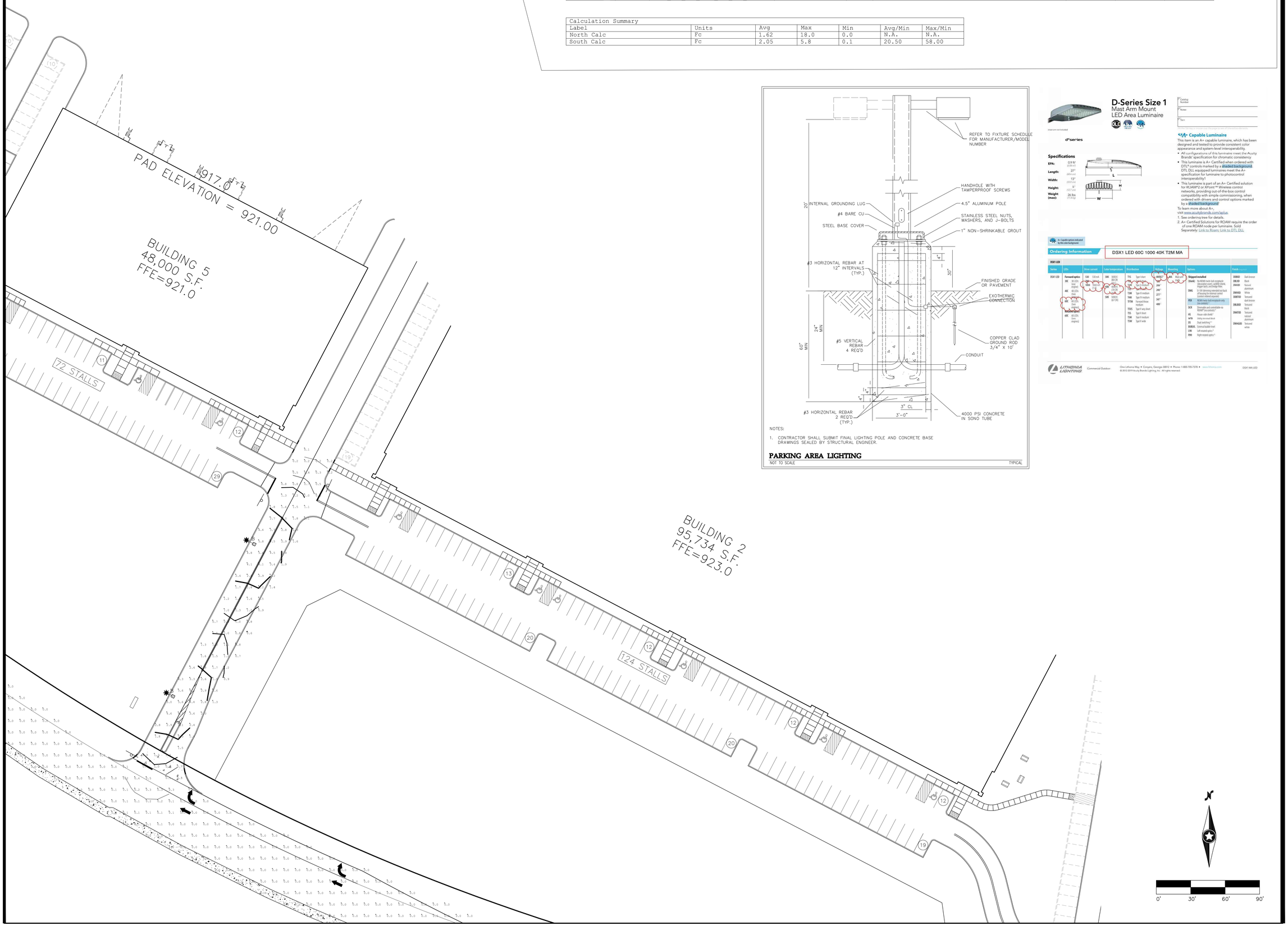

NOTES:

1. CONTRACTOR SHALL SUBMIT FINAL LIGHTING POLE AND CONCRETE BASE DRAWINGS SEALED BY STRUCTURAL ENGINEER.

PARKING AREA LIGHTING
NOT TO SCALE — TYPICAL

POPE ARCHITECTS
1255 ENERGY PARK DRIVE
ST. PAUL, MN 55108-5118
PH. (651) 642-9200
FAX (651) 642-1101

UNITED PROPERTIES

RJRyan
Commercial Design and Construction
R.J. Ryan Construction, Inc.
1100 Mendota Heights Road
Mendota Heights, MN 55120
Ph. (651) 881-0200 Fax (651) 881-0235

INVERPOINT BUSINESS CENTER

INVER GROVE HEIGHTS, MINN.

Revisions:
01: .
02: .
03: .
04: .
05: .
06: .

I hereby certify that this plan was prepared by me or under my direct supervision and that I am a duly licensed PROFESSIONAL ENGINEER under the laws of the State of Minnesota.

David T. Bade
Date: 12/07/20 License No. .

Designed: .
Checked: .
Drawn: .
Record Drawing by/date:

Date: 12/07/20 Sheet: E102