Inver Grove Heights Planning Commission
Tuesday, August 20, 2024 at 7:00 PM
8150 Barbara Avenue, Inver Grove Heights, MN 55077

AGENDA

NOTICE TO RESIDENTS: Individuals may submit written public comments in advance of the meeting by emailing comments to Stacy Bodsberg (sbodsberg@ighmn.gov). Comments received prior to 4:00 p.m. on Tuesday, August 20, 2024, will be provided to the Council at or before the August 20, 2024 meeting.

1. **Call to Order**
2. **Roll Call**
3. **Consent Agenda**
4. **Public Hearing**
   - **A.** Variances from the Exterior Building Material Requirements and Side Setback Requirements for a Structure Located at 7280 Dickman Trail. (T & J Stanton FLP - Case No. 24-27V)
   - **B.** Variance from the Required Side Setback to Build a New Structure Located at 10037 Barnes Trail. (Nathan Diamond - Case No. 24-30V)
   - **C.** Interim Use Permit to Operate a Park-and-Fly in the Parking Lot Located at 6588 Cahill Avenue. (Inver Grove Hospitality / AmericInn - Case No. 24-28IUP)
5. **Regular Business**
   - **A.** Discussion Only about the Pine Bend Landfill Vertical Capacity Expansion Request located at 2495 117th Street East. (BFI Waste Systems - Case No. 24-21NCUC)
6. **Adjourn**

This document is available upon a three (3) business day request in alternate formats such as braille, large print, audio recording, etc. Please contact Stacy Bodsberg, Community Development Support Specialist, at 651.450.2545 or sbodsberg@ighmn.gov.

Agenda Item 4.A.

Planning Commission Report

MEETING DATE:	August 20, 2024
CASE NO:	24-27V
APPLICANT:	T&J Stanton, LFP
PROPERTY OWNER:	Same as Applicant
REQUEST:	Variance
LOCATION:	7280 Dickman Trail
COMPREHENSIVE PLAN:	Mixed Use
ZONING:	I-1, Limited Industrial District
STAFF CONTACT:	Heather Botten, 651.450.2569

ACTION REQUESTED

The specific request consists of the following:

- Variance from Section 10-15-17, Exterior Building Materials; and
- Variance from Section 10-11A, Allowing the structure to be less than the 40-foot setback from a property line.

BACKGROUND

The applicant is requesting Variances from the siding requirements and the side setback to allow a structure with hoop type construction covered with a canvas/poly exterior material. The structure is located about 22 feet from the side property line whereas 40 feet is required.

The applicant operates a contracting business on site and installed the structure in 2020. The structure was installed without a building permit and does not meet the exterior building material requirements and the required side yard setback. The intent of the building is to shelter materials that are sensitive to the elements. The building is approximately 1,200 square feet in size and is located approximately 22 feet from the north property line. All structures are to maintain at least a 40-foot setback from property lines in the I-1, Limited Industrial zoning district. The main buildings for the business are located on the larger parcel to the south, about 880 feet from the proposed structure.

EVALUATION OF REQUEST

The following land uses, zoning districts and comprehensive plan designations surround the subject property:

North	City Owned Property	Zoned: I-1, Limited Industrial	Guided: LI, Light Industrial
East	Railroad Tracks & Single-Family	Zoned: R-1C, Single-Family Residential	Guided: LDR, Low Density Residential
West	Apartments	Zoned: R-3C, Multiple-Family Residential	Guided: MDR, Medium Density Residential
South	Industrial Type Uses	Zoned: I-1, Limited Industrial	Guided: LI, Light Industrial

The hoop structure is in violation of Section 10-15-17 Exterior Building Materials. Below is the code language regarding material requirements:

> *A. Commercial, Industrial And Institutional Buildings: All exterior vertical surfaces of any principal or accessory structure in a B, I or P zoning district shall have an equally attractive or the same fascia as the front. At least fifty percent (50%) of the exterior vertical surface shall consist of one or a combination of the following or similar materials: brick veneer; sculptured, textured or concrete block or panels; natural wood siding; steel, aluminum or vinyl lap siding; natural stone or glass. A maximum of one-third (1/3) of a building wall is permitted to have sheet or corrugated steel or aluminum finish.*

The building setbacks for the structure are in violation of Section 10-11A, which require side setbacks to be no less than 40 feet from property lines. The applicant is requesting the structure to be about 22 feet from the northern side lot line.

ENGINEERING REVIEW

Engineering has reviewed the request and takes no exception to the Variance requests for exterior building materials or location of the structure.

VARIANCE REVIEW

City Code Title 10, Chapter 3. Variances, states that the City Council may grant variances when they are in harmony with the general purposes and intent of the zoning ordinance and consistent with the comprehensive plan and establishes that there are practical difficulties in complying with the official control. In order to grant the requested variances, City Code identifies criteria which are to be considered practical difficulties. The applicant's request is reviewed below against those criteria.

1. *The Variance request is in harmony with the general purpose and intent of the City Code and consistent with the Comprehensive Plan.*

> The intent of the code is to require all commercial and industrial buildings to have a high grade of materials for aesthetic and valuation purposes. Dickman Trail and Concord Boulevard have a mix of building types and exterior materials due to the age of the buildings in the area. In order to help redevelop the area, all buildings should be required to be constructed meeting current exterior material standards.
>
> Setback standards are designed to maintain consistency and conformity to all structures in an area. In this case, the request is for an accessory type of building or shelter, the zoning code does not have reduced setbacks for accessory buildings in the Industrial zones.

2. *The property owner proposes to use the property in a reasonable manner not permitted by the Zoning Ordinance.*

The property is being used in a similar fashion as others along Dickman Trail and Concord Boulevard with a mix of industrial type uses. Allowing an accessory type of structure for storage is consistent with the I-1 District. As noted above, even though the area has existing older buildings that do not comply with code requirements, new structures shall be permitted and comply with zoning regulations.

The applicant owns three contiguous parcels totaling about 16 acres in size. The hoop structure is located on the northern parcel, on about 3.58 acres. Maximum building coverage in the I-1 District is 30%, and the parcel is well below that requirement.

3. *The plight of the landowner is due to circumstances unique to the property to allow a structure not meeting the exterior standards or setbacks.*

There does not appear to be any unique circumstances to the property to allow a structure not meeting the exterior standards or setbacks.

4. *The Variance will not alter the essential character of the locality.*

The buildings in the area are a mix of building materials with some that may not be fully in compliance with current exterior standards. Due to the age of many buildings, they were most likely built prior to the current standards. Allowing a new building to not meet the exterior standards could alter the character and affect the aesthetics and property valuations in the area.

Again, due to the historical age of the Dickman/Concord area, there are many buildings that do not comply with current setback standards. These would be considered non-conforming.

5. *Economic considerations alone do not constitute an undue hardship.*

There would be additional costs in either constructing a more permanent building or adding a different type of siding over the existing steel frame.

ALTERNATIVES

The Planning Commission has the following actions available on the following requests:

A. <u>Approval</u>. If the Planning Commission finds the application to be acceptable, the following action should be taken:

- Approval of the **<u>Variance</u>** to allow a structure not meeting the exterior materials standard for industrial buildings subject to the following conditions:

1. The site shall be developed in substantial conformance with the site plan on file with the Planning Department.

2. The structure is required to comply with all building and fire codes. A building permit is required to be approved by the Inspections Department.

Practical Difficulty: To be stated by the Planning Commission if supported.

- Approval of the Variance to allow the structure with reduced side yard setback.

Practical Difficulty: To be stated by the Planning Commission if supported.

B. <u>Denial</u>. If the Planning Commission does not favor the proposed request(s), it should be recommended for denial, which could be based on the following rationale:

1. Denying the Variance request does not preclude the applicant from reasonable use of the property.

2. Approval of the exterior building material Variance could set a precedent for other accessory buildings, temporary or permanent.

3. The facts presented did not satisfy the criteria needed to show a practical difficulty on the lot to support granting a Variance.

RECOMMENDATION

Based on the information in the preceding report staff does not believe there is sufficient rationale to support the criteria of a Variance and therefore recommends denial of both the exterior building materials request and the reduced side setback as proposed.

ATTACHMENTS

1. Zoning and Location Map
2. Aerial Photo
3. Narrative
4. Site Plan
5. Photo of Structure
6. Example of Material Sheets

Case No. 24-27V
7280 Dickman Trail

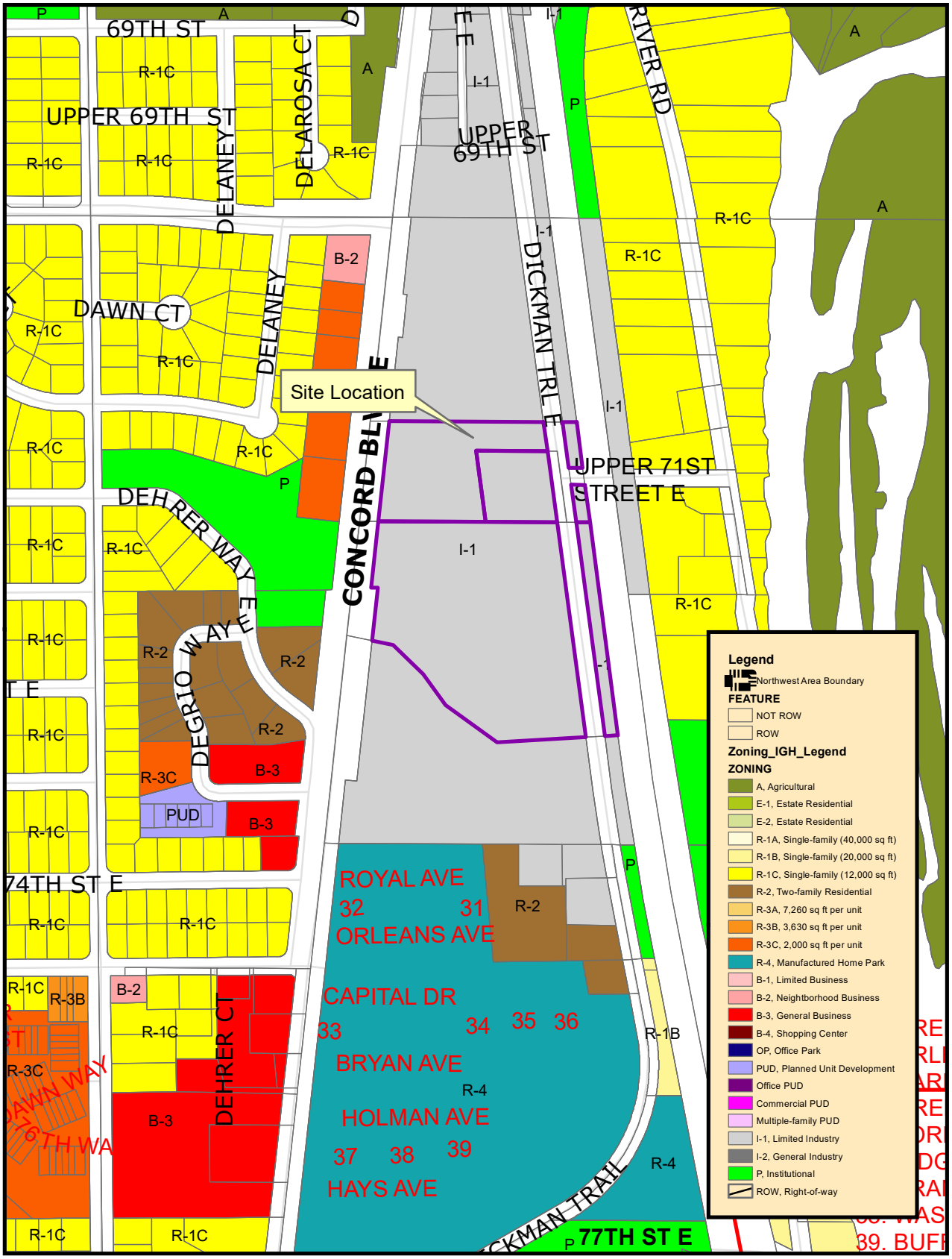

THIS DRAWING IS NEITHER A LEGALLY RECORDED MAP NOR A SURVEY AND IS NOT INTENDED TO BE USED AS ONE. THIS DRAWING IS A COMPILATION OF RECORDS, INFORMATION AND DATA LOCATED IN VARIOUS CITY, COUNTY AND STATE OFFICES AND OTHER SOURCES AND IS TO BE USED FOR REFERENCE PURPOSES ONLY. THE CITY OF INVER GROVE HEIGHTS IS NOT RESPONSIBLE FOR ANY INACCURACIES HEREIN CONTAINED
Map produced by the City of Inver Grove Heights GIS Dept.
Copyright© City of Inver Grove Heights 2020

N

Exhibit A

Zoning and Location Map

7280 Dickman Trail
Case No. 24-27V

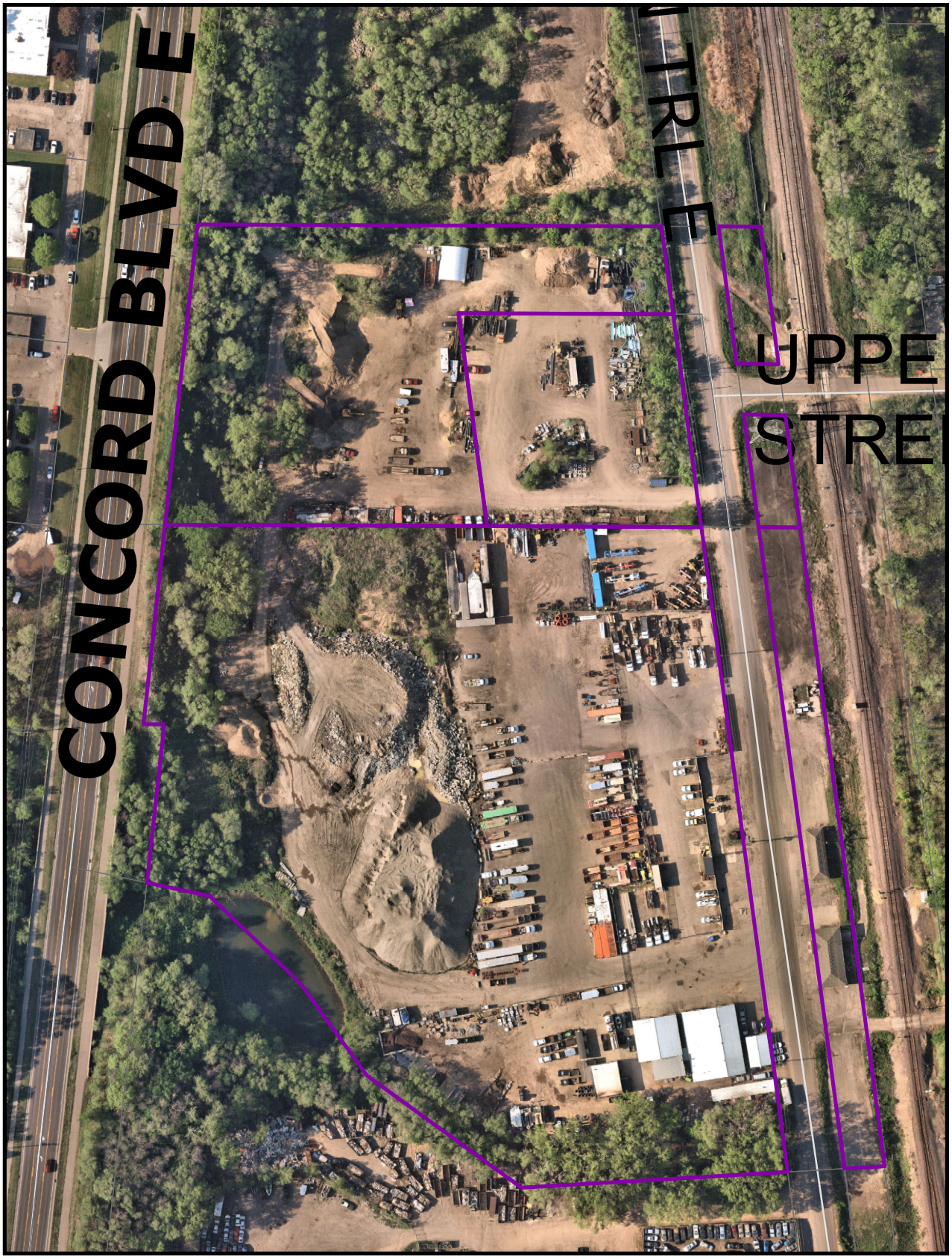

THIS DRAWING IS NEITHER A LEGALLY RECORDED MAP NOR A SURVEY AND IS NOT INTENDED TO BE USED AS ONE. THIS DRAWING IS A COMPILATION OF RECORDS, INFORMATION AND DATA LOCATED IN VARIOUS CITY, COUNTY AND STATE OFFICES AND OTHER SOURCES AND IS TO BE USED FOR REFERENCE PURPOSES ONLY. THE CITY OF INVER GROVE HEIGHTS IS NOT RESPONSIBLE FOR ANY INACCURACIES HEREIN CONTAINED
Map produced by the City of Inver Grove Heights GIS Dept.
Copyright© City of Inver Grove Heights 2020

N

Exhibit B
Aerial Photo of Property
April 2024

Variance Narrative

Property Owner: T&J Stanton FLP Property
7280 Dickman Trail
Inver Grove Heights, MN 55076

Site Details: Three parcels
Combined 19.08 Acres
Seven total finished building structures on site
Operated as Contractor Yard since 1950's

Objective: Obtain a variance that allows for the continued use of a covered shelter to hold weather sensitive construction materials.

Shelter Facts:

- 34' x 25' footprint
- 20' height at peak
- Shielded on site by vegetation, earth berm, and screened from right away by site fencing
- Used to short store screened black dirt, salt, loose materials that can blow around and materials that are sensitive to sun / rain
- Cover was put over base concrete blocks in 2020
- Designed form manufacture to withstand snow and wind loads
- No fixtures, furnishings or work operations besides short-term material storage
- Helps keep water run off clean
- Better aesthetics than tarps or wood and plastic
- Modular and can be moved on site

T&J Stanton FLP

Parcel ID: 20-01100-27-014

Legal Description:

PT OF N 350 FT OF S 600 FT OF NW 1/4 OF NW 1/4 & OF GOVT LOT 8 LYING W OF RR & E OF STH#56 EX BEG INT S LINE OF N 350 FT OF S 600 FT & C/L CR #77 N 89D 50M 30S W 283.25 FT N 6D 55M 54S W 250 FT S 89D 50M 30S E 283.25 FT TO C/L CR #77 S 6D 55M 54S E ON C/L 250 FT TO BEG EX PT TO CITY EX PARCEL 45 DAKOTA CO R/W MAP 294

T&J Stanton FLP Property
7280 Dickman Trail
Inver Grove Heights, MN 55076

- Three parcels
- Combined 19.08 Acres
- Operated as Contractor Yard since 1950's

Objective:

Obtain a variance that allows for the continued use of a covered shelter to hold weather sensitive construction materials.

Shelter Facts:

- 34' x 25' footprint
- 20' height at peak
- Used to store screened black dirt, salt, or loose materials that can blow around or materials that are sensitive to sun / rain
- Cover was put over base concrete blocks in 2020
- Designed form manufacture to withstand snow and wind loads
- No fixtures, furnishings or work operations besides short term material storage
- Helps keep water run off clean
- Better aesthetics than tarps or wood and plastic
- Modular and can be moved on site

ClearSpan

ARMOR SHIELD
Exclusive Industry-Leading
30 YEAR WARRANTY

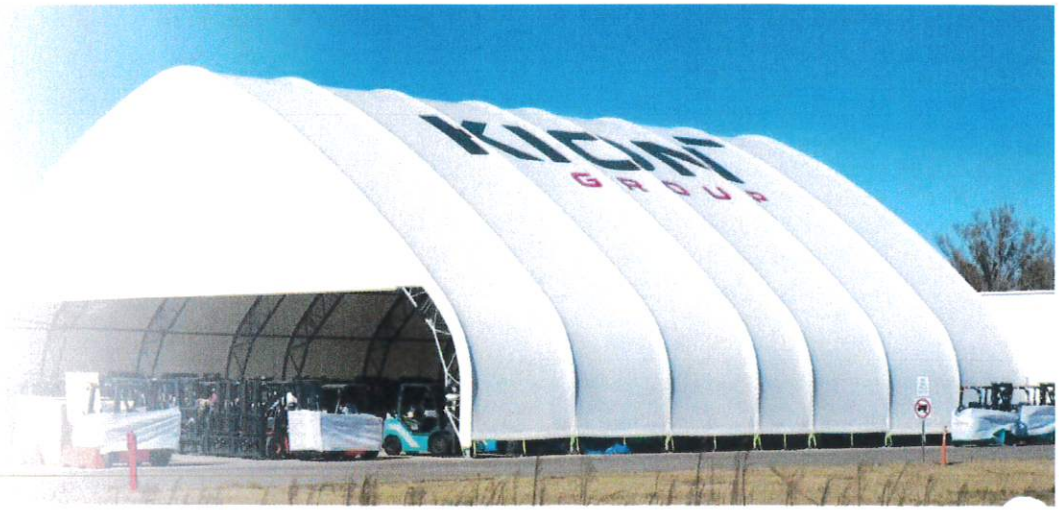

FEATURED PROJECTS

Size – 65' W x 80' L
Location -
Dyersville, IA
VIEW MORE PROJECTS

ARMOR SHIELD COVER

ARMOR SHIELD COVER – INDUSTRY-LEADING 30 YEAR WARRANTY

ClearSpan also offers the exclusive Armor Shield Cover. Armor Shield is a 29 oz. architectural vinyl building cover that was designed to provide maximum strength and durability. This material has gone through extensive testing to ensure it provides customers with decades of use. The cover comes with an industry-leading 30 year warranty, and it is constructed with seven different layers:

VIDEO TESTIMONIALS

ClearSpan Storage Buildings
VIEW MORE VIDEO TESTIMONIALS

CASE STUDIES

APPLICATION –
Indoor riding arena and storage
LOCATION -
Cleveland, TX
VIEW MORE

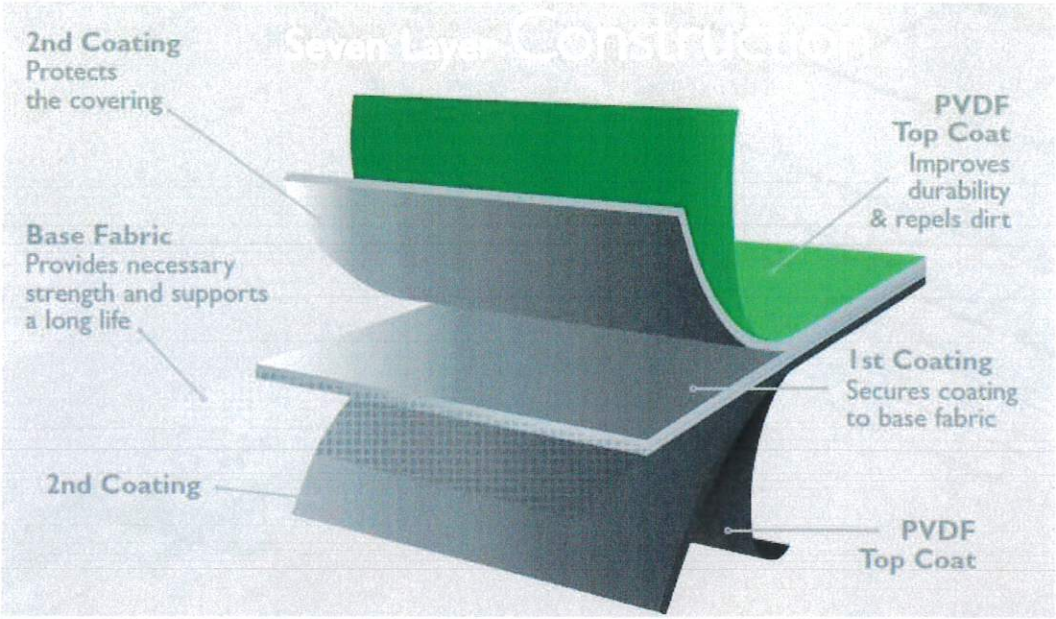

Strip Tensile Test

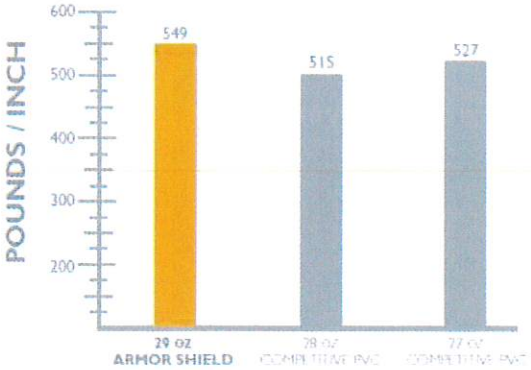

Fabric Strength Test

Here's our fabric cover and structural steel lifting a full size truck.

HOME

Industries
Our Buildings
Why ClearSpan?
Services
California Consumer Privacy Act Opt

About Us
Contact Us
Privacy Policy

Sitemap
Accessibility Statement

BUILD YOUR OWN – LOOKING FOR A CUSTOM SOLUTION?

CONTACT INFO

ClearSpan Structures
1395 John Fitch Blvd
South Windsor, Connecticut
06074

HEADQUARTERS

Toll-free USA: (866) 643-1010
International: +1 860 760 0046
trussinquiry@clearspan.com

GET SOCIAL

OUR NEWSLETTER

Get the latest news, offers and promotions from ClearSpan.

Agenda Item 4.B.

Planning Commission Report

MEETING DATE:	August 20, 2024
CASE NO:	24-30V
APPLICANT:	Nathan Diamond
PROPERTY OWNER:	Same.
REQUEST:	Variance
LOCATION:	10037 Barnes Trail
COMPREHENSIVE PLAN:	RDR, Rural Density Residential
ZONING:	A, Agricultural
STAFF CONTACT:	Heather Botten, 651.450.2569

ACTION REQUESTED

The applicant is requesting the following:

- Variance to allow a detached accessory structure up to 40 feet from the side property line whereas 50 feet is required.

BACKGROUND

The applicant is requesting a Variance to build a 1,600 gross square foot accessory structure within the side yard setback requirements. The lot is 4.99-acres in size, with about 680 feet of road frontage. The property has roughly 65 feet of grade change from the highest to lowest point and has a 200-foot wide NSP easement that runs along the northern part of the property. The lot contains a single-family home, with an attached garage.

The applicant is proposing to construct the building in line with the front setback of the home, about 55 feet from the front property line. The building would be located about 40 feet from the property line. Accessory structures over 1,000 gross square feet in size require a 50-foot setback from all property lines.

Alternate locations were considered for the proposed structure. There are topographical challenges from the front to the back of the property along with a well and septic and drainfield sites that need to be avoided. These challenges along with the NSP easement prompted the Variance request.

EVALUATION OF REQUEST

The following land uses, zoning districts, and comprehensive plan designations surround the subject property:

East, South & West	Single-Family	Zoned: A, Agricultural	Guided: RDR, Rural Density Residential
North	Single-Family	Zoned: E-1, Estate Residential	Guided: RDR, Rural Density Residential

ENGINEERING REVIEW

Engineering has reviewed the request and takes no exception to the proposed location of the accessory building.

VARIANCE REVIEW

City Code Title 10, Chapter 3. Variances, states that the City Council may grant variances when they are in harmony with the general purposes and intent of the zoning ordinance and consistent with the comprehensive plan and establishes that there are practical difficulties in complying with the official control. In order to grant the requested variances, City Code identifies criteria which are to be considered practical difficulties. The applicant's request is reviewed below against those criteria.

1. *The Variance request is in harmony with the general purpose and intent of the City Code and consistent with the Comprehensive Plan.*

The property is allowed one detached accessory structure, up to 2,395 gross square feet in size. These code requirements would be met. One of the functions of setback requirements is to maintain consistency of structure placement and aesthetic qualities from street and neighboring views. The proposed structure would be about 160 feet from the closest neighboring structure to the west and in line with the existing home. Staff believes the intent of the code is met with the proposed structure.

2. *The property owner proposes to use the property in a reasonable manner not permitted by the zoning ordinance.*

The applicant is requesting to place the structure within the most reasonable area of the property that provides the least amount of land alteration while meeting the needs of the applicant. If the applicant constructed the building to comply with setback requirements, additional grading and tree removal would be required. The proposed building complies with the maximum size allowed and meets the side setbacks for an accessory structure that would be 1,000 square feet or less.

3. *The plight of the landowner is due to circumstances unique to the property not created by the landowner.*

The property is unique in that, due to the shape of the lot and the 200-foot wide NSP easement that runs along the northern part of the property, the buildable area is reduced as structures are not allowed within the easement. Additionally, there is about 65 feet of grade change from the front of the property to the back.

4. *The Variance will not alter the essential character of the locality.*

The property is in a developed rural neighborhood that contains a variety of structure sizes and locations. The proposed structure would be located about 55 feet from the front property line, in line with the existing home and about 160 feet from the closest neighboring home to the west. The proposed location would have the least amount of grading and tree removal compared to other areas on the property.

Due to the size of the lots, location of the structure, and size of neighboring structures, the proposed building does not appear to alter the character of the neighborhood.

5. *Economic considerations alone do not constitute an undue hardship.*
Economic considerations do not appear to be a basis or a sole basis for this request.

ALTERNATIVES
The Planning Commission has the following actions available for the request:

A. Approval. If the Planning Commission finds the application to be acceptable, the following action should be taken:

- Approval of a Variance to construct a detached accessory structure within the side setback subject to the following conditions:

  1. The structure shall be constructed in substantial conformance with the site plan on file with the Planning Department.

  2. The accessory structure shall not be used for commercial uses, storage related to commercial use, or home occupations.

  3. A grading/erosion control plan shall be required at the time of the building permit application.

Rationale: The proposed setback is not out of character for the neighborhood and is consistent with the comprehensive plan. The location of the structure does not appear to have an adverse impact on the neighboring properties. The property is unique in that it has about 65 feet of grade change along with a 200-foot NSP easement that runs along the northern part of the property, reducing the buildable area on the lot.

B. Denial. If the Planning Commission does not favor the proposed variance, the above request should be recommended for denial. With a recommendation for denial, findings or the basis for the denial should be given.

RECOMMENDATION
Based on the information in the preceding report and the conditions listed in Alternative A, staff believes there is rationale to support a side setback variance and is recommending approval of the request as presented.

ATTACHMENTS
1. Zoning and Location Map
2. Topography and Easement Map
3. Narrative
4. Site Plan

10037 Barnes Trail
Case No. 24-30V

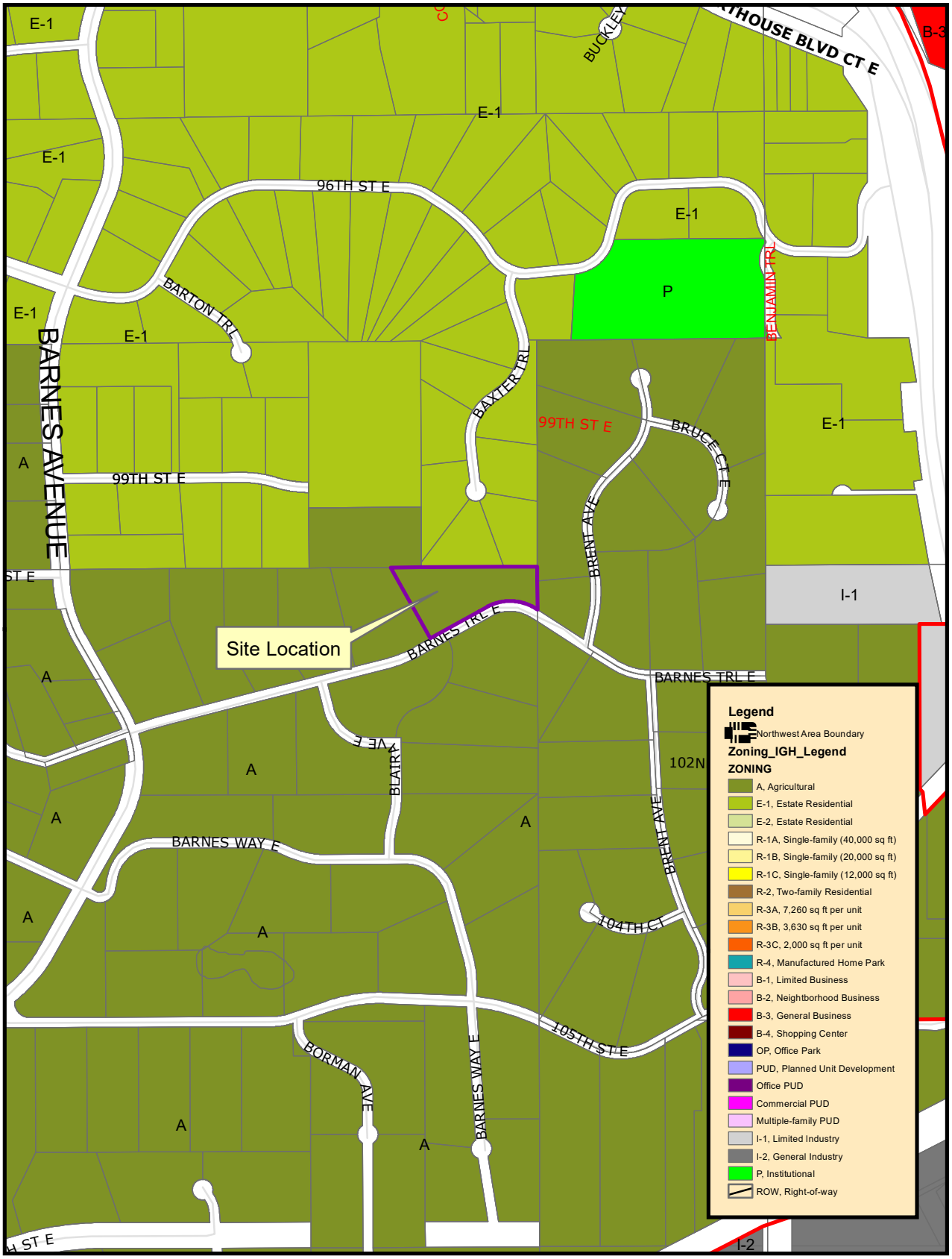

THIS DRAWING IS NEITHER A LEGALLY RECORDED MAP NOR A SURVEY AND IS NOT INTENDED TO BE USED AS ONE. THIS DRAWING IS A COMPILATION OF RECORDS, INFORMATION AND DATA LOCATED IN VARIOUS CITY, COUNTY AND STATE OFFICES AND OTHER SOURCES AND IS TO BE USED FOR REFERENCE PURPOSES ONLY. THE CITY OF INVER GROVE HEIGHTS IS NOT RESPONSIBLE FOR ANY INACCURACIES HEREIN CONTAINED
Map produced by the City of Inver Grove Heights GIS Dept.
Copyright© City of Inver Grove Heights 2020

N

Exhibit A

Zoning and Location Map

10037 Barnes Trail
Case No. 24-30V

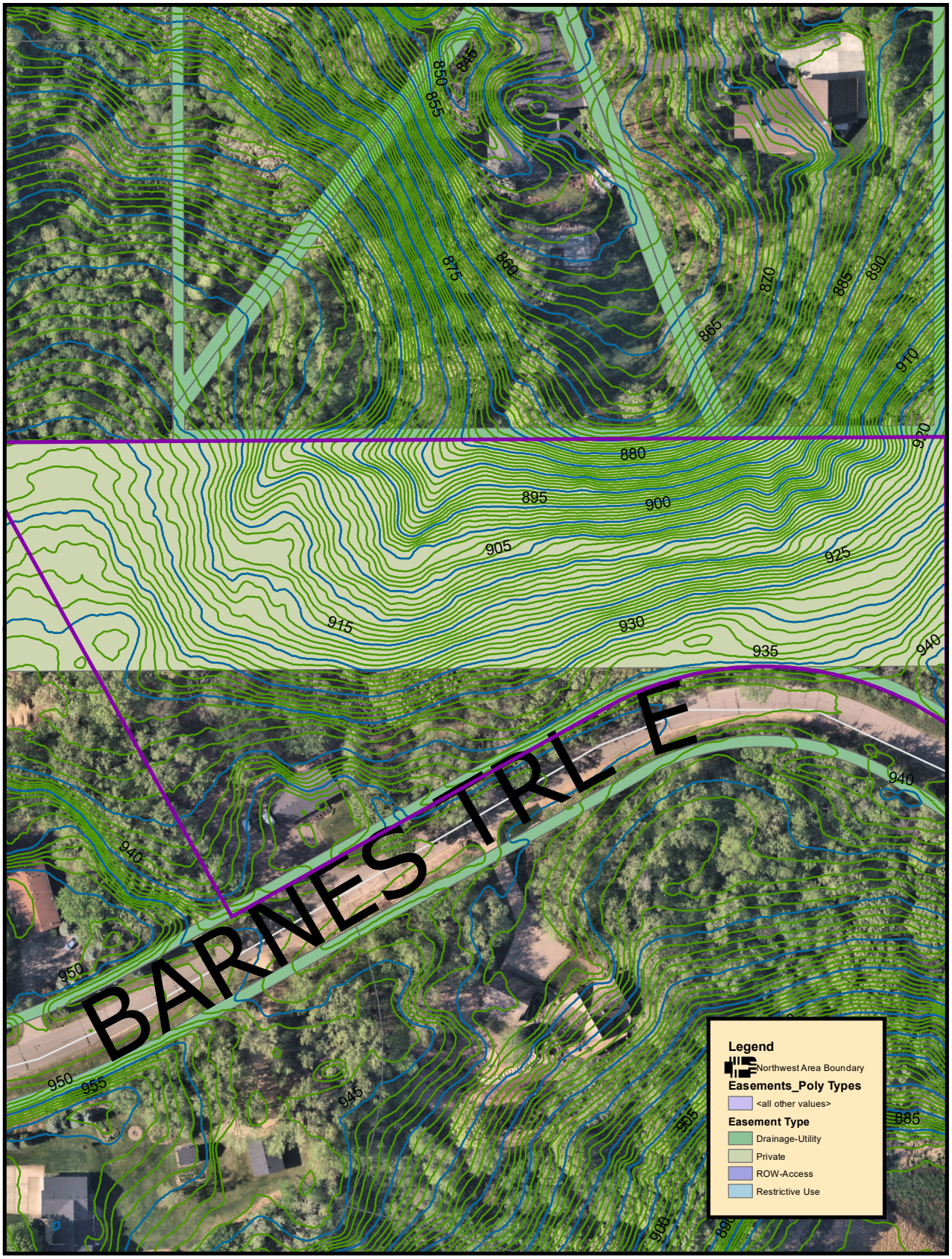

THIS DRAWING IS NEITHER A LEGALLY RECORDED MAP NOR A SURVEY AND IS NOT INTENDED TO BE USED AS ONE. THIS DRAWING IS A COMPILATION OF RECORDS, INFORMATION AND DATA LOCATED IN VARIOUS CITY, COUNTY AND STATE OFFICES AND OTHER SOURCES AND IS TO BE USED FOR REFERENCE PURPOSES ONLY. THE CITY OF INVER GROVE HEIGHTS IS NOT RESPONSIBLE FOR ANY INACCURACIES HEREIN CONTAINED
Map produced by the City of Inver Grove Heights GIS Dept.
Copyright© City of Inver Grove Heights 2020

N

Exhibit B

Topography and NSP Easement

Legal Description: Lot 7, Block 4, Blair Estates, Dakota County, Minnesota

Narrative: I am requesting a variance in order to build a 32x50 detach building to the west of the existing house and attached garage. The area that I am requesting to place the detached building is 42 +/- feet from the lot line to the west side of the property (setback is 50 feet), the front of the building will be in line with the current house and attached garage which has a 65 feet setback from the front/south road line (setback is 30 feet).

The reason that I choose this location is based on a few factors

1) There is a large electrical line easement on the back side of the property which does not allow permanent building to take place in the location.
2) Next location is north of the house, up against the easement. This area behind the house is sloped back towards the easement area and all drainage from the yard travels in this direction. Multiple trees (>10) would need to be removed from this area which would impact the lot negatively.
    a. Access to this location would need to have a driveway built into the easement along with having to add driveway access over the existing septic system line and drainage field
3) Location available to the east of the house is also heavily wooded and access to this area would be difficult and also negatively impact the lot by removing a large amount of trees (>30) along with terrain that is not conducive to placing a building.
4) Area next to the attached garage is already cleared and filled by previous owner, the house to the west is ~100 yards away through a heavily wooded area which placing the building in this location would not negatively impact the lot that I own, nor would it negatively impact the neighbors.

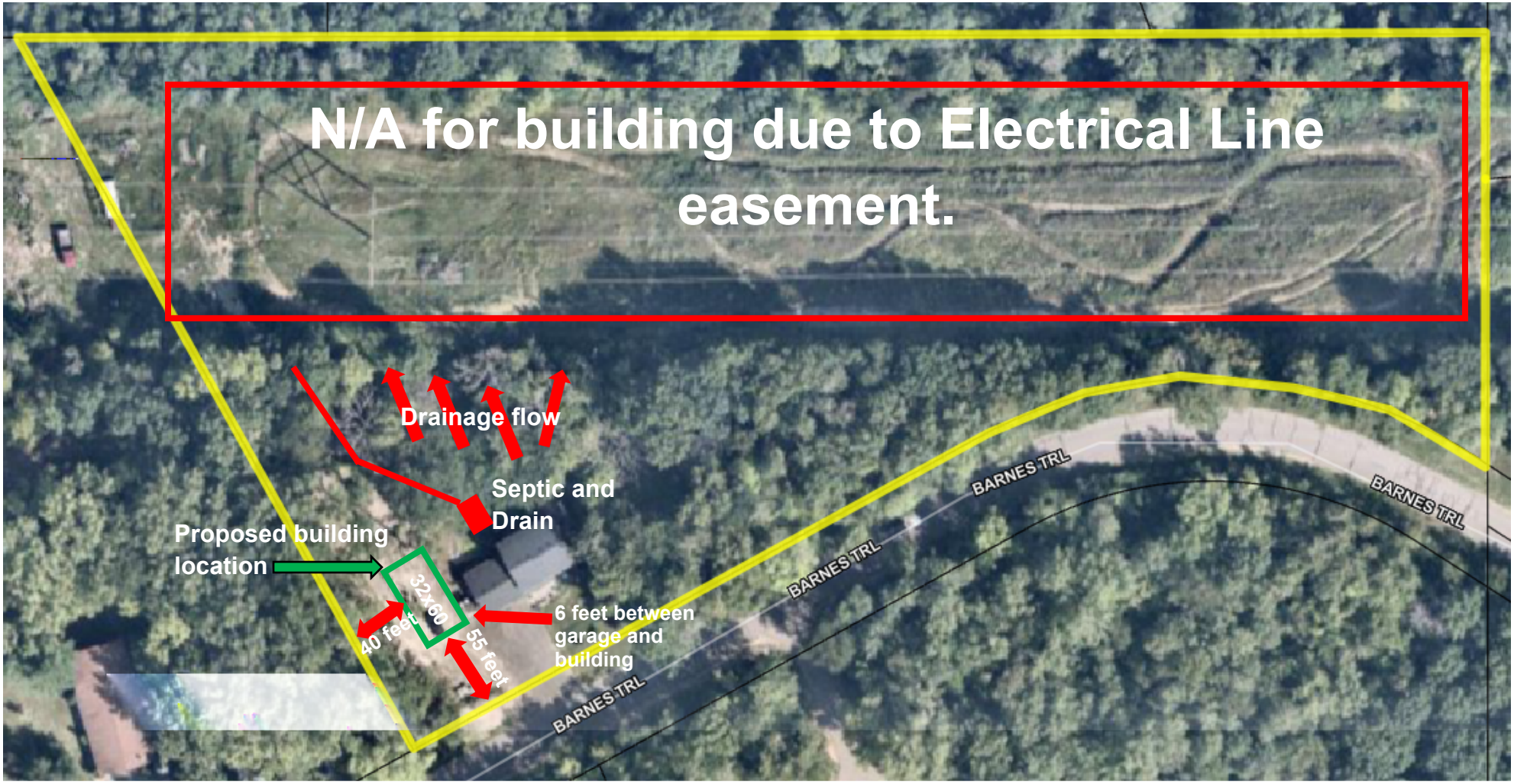

Proposed building – ~30X60 next to the existing attached garage (32x40 garage with a 20x32 enclosed cold storage on the backside)

Setback from existing attached garage ~6 feet (code = 5 feet)

Setback from side property line (to the west) - ~40 feet (code 50 feet)

Setback from front property line (to the south) - ~55 feet

Parking area in front of house (crushed blacktop so not impervious. Area of crushed asphalt is 1755 sq ft

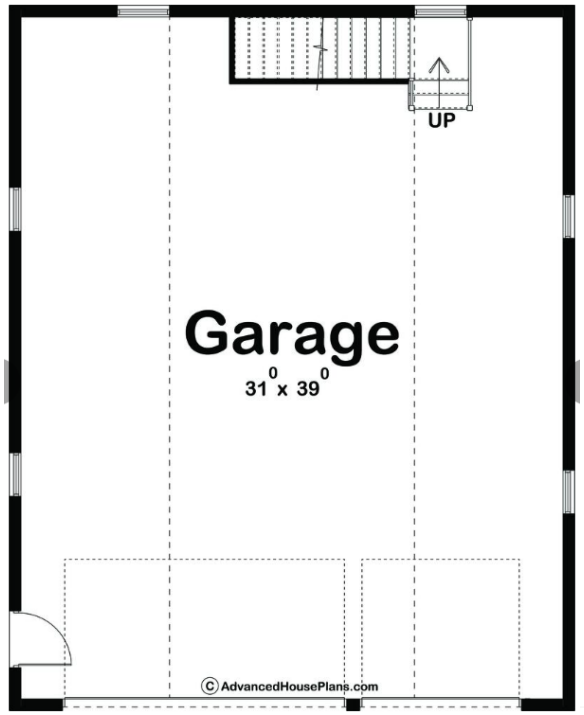
UP
Garage
31 0 x 39 0
© AdvancedHousePlans.com

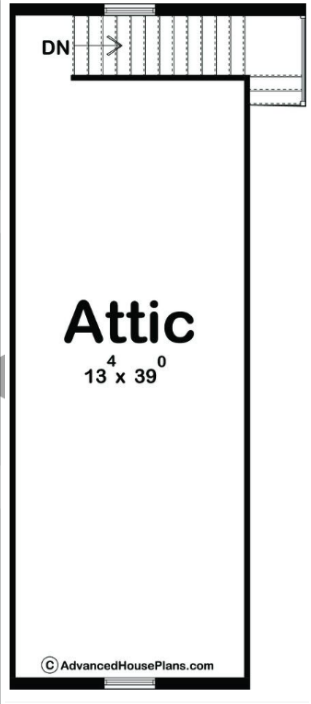
DN
Attic
13 4 x 39 0
© AdvancedHousePlans.com

Agenda Item 4.C.

Planning Commission Report

MEETING DATE:	August 20, 2024
CASE NO:	24-28IUP
APPLICANT:	Inver Grove Hospitality / AmericInn Hotel
PROPERTY OWNER:	Gator Village Partners, Ltd.
REQUEST:	Interim Use Permit
LOCATION:	6600 Cahill Avenue
COMPREHENSIVE PLAN:	MU, Mixed Use
ZONING:	B-4, Shopping Center
STAFF CONTACT:	Heather Botten, 651.450.2569

ACTION REQUESTED

The applicant is requesting the following:

- Per Section 10-14, Interim Uses, the applicant is requesting an Interim Use Permit to allow the operation of a park-and-ride facility.

BACKGROUND

AmericInn Hotel (applicant), located at 5861 Blaine Avenue, received an Interim Use Permit (IUP) and a one-time extension to operate a 250 space, park-and-ride facility at the AMC Movie Theatre parking lot. This IUP is set to expire January 10, 2025.

The applicants are requesting an Interim Use Permit to continue the operation of the park-and-ride facility at the proposed location for an additional five years, with the possibility of a one-time extension.

The multi-tenant commercial property is overparked. The property is home to Dollar Tree, Aldi, Post Office, O'Reilly's Auto, and a couple other small retail and restaurant establishments. Based on the parking requirements of the City Code, the parking minimums for the existing businesses are all accounted for within the front or side of the existing buildings. The proposed interim use on the property to store vehicles for a park-and-ride does not appear to have an impact on the existing businesses. The park-and-ride facility would be located on existing impervious surface, behind the existing businesses on the east side of the parcel. The drivers from AmericInn would access the park-and-ride from Carmen Avenue.

EVALUATION OF REQUEST

The following land uses, zoning districts, and comprehensive plan designations surround the subject property:

North	Commercial	Zoned: B-3, General Commercial	Guided: MU, Mixed Use
West	Commercial	Zoned: B-3, General Commercial	Guided: MU, Mixed Use
South	Commercial and Elementary School	Zoned: B-3, General Commercial and P, Institutional	Guided: MU, Mixed Use and P/I, Public Institutional
East	Apartments	Zoned: R-3C, Multiple-Family Residential	Guided: MDR, Medium Density Residential

INTERIM USE PERMIT REVIEW

Interim use is defined as a temporary use of a property until a specific date, occurrence of a particular event, or until zoning regulations no longer permit. Interim uses are typically uses that are not appropriate based upon strict application of Zoning Code restrictions, existing development and proposed future land-use plans. However, they may have merit as uses for some intermediary period of time. A one-time extension of an interim use permit approval may be granted by the City Council. Upon expiration of an interim use permit, the property owner shall not request a new interim use permit for the same interim use on the property.

The applicants are asking for a similar request that was approved for the park-and-ride at AMC theater. They are requesting a five-year IUP to operate a 192 space, park-and-ride in the commercial parking lot. AmericInn Hotel would lease the eastern portion of the lot for the park-and-ride operation. The area would not be fenced but would have security cameras. The drivers from AmericInn would use the access points from Carmen Avenue and would not drive through the other business parking from Cahill Avenue.

Staff believe this area has high redevelopment potential. The City's intent is to encourage economic growth. The property owners have not had any discussions with the City regarding new development or redevelopment of the parcel. The long-term continuation of a low intense use, such as a park-and-ride, is not consistent with these goals. An interim use allows for utilization of the existing excess parking lot for a specific amount of time instead of a permanent use of the site.

ENGINEERING REVIEW

Engineering has reviewed the request and takes no exception to the proposed plans as no grading or additional impervious surface would be added to the site.

PUBLIC SAFETY REVIEW

The number of potential public safety calls is a concern for this type of use. The applicant has stated that lights and security cameras would be installed and possibly a guard post. The Police Department has recommended that the cameras hold memory for at least two weeks and that a 24-hour contact be given to the Police Department.

ALTERNATIVES

The Planning Commission has the following actions available on the following requests:

A. Approval. If the Planning Commission finds the application to be acceptable, the following actions should be recommended for approval:

- Approval of the Interim Use Permit to allow a park-and-ride facility as proposed subject to the following conditions:

1. The park-and-ride facility shall be limited to 192 parking spaces as identified on the site plan dated August 13, 2024, on file with the Planning Department.

2. The interim use permit shall be valid for a period of five (5) years from the City Council approval date.

3. The park-and-ride facility shall not be utilized for open storage of goods or for the storage of vehicles that are inoperable or for lease, rent or sale.

4. A violation of the terms and conditions attached to the approval of an interim use permit shall be deemed a cause for revocation of that interim use permit.

5. On-site security shall be provided by the operator of the park-and-ride facility 24-hours a day, every day. Security cameras must record data for a minimum of two weeks. Signs shall be posted stating cameras are in use.

6. A 24-hour contact phone number shall be given to the IGH Police Department for on-sight issues.

7. A 24-hour contact phone number shall be given to the IGH Police Department to review and receive security video footage of the park-and-ride.

8. The designated park-and-ride shall have the parking spaces striped with fire lanes clearly marked.

9. Lighting of the designated park-and-ride is required and shall comply with City Code Section 10-15-5.

10. Access to and from the park-and-ride shall be from Carmen Avenue. Cutting through the parking lot from Cahill Avenue, from park-and-ride by employees, shall be prohibited.

11. A final security plan identifying the location of all security cameras and guard post (if installed), lighting and any other security measures provided shall be submitted to the City Planning Department prior to the start of operation.

B. Denial. If the Planning Commission does not favor the proposed application or portions thereof, the above request should be recommended for denial. With a recommendation for denial, findings or the basis for the denial should be given.

RECOMMENDATION

Based on the preceding report, Staff recommends approval of the interim use permit for a 192-space park-and-ride facility with the conditions listed in Alternative A.

ATTACHMENTS

1. Zoning and Location Map
2. Narrative
3. Aerial Site Plan

6600 Cahill Avenue
Case No. 24-28IUP

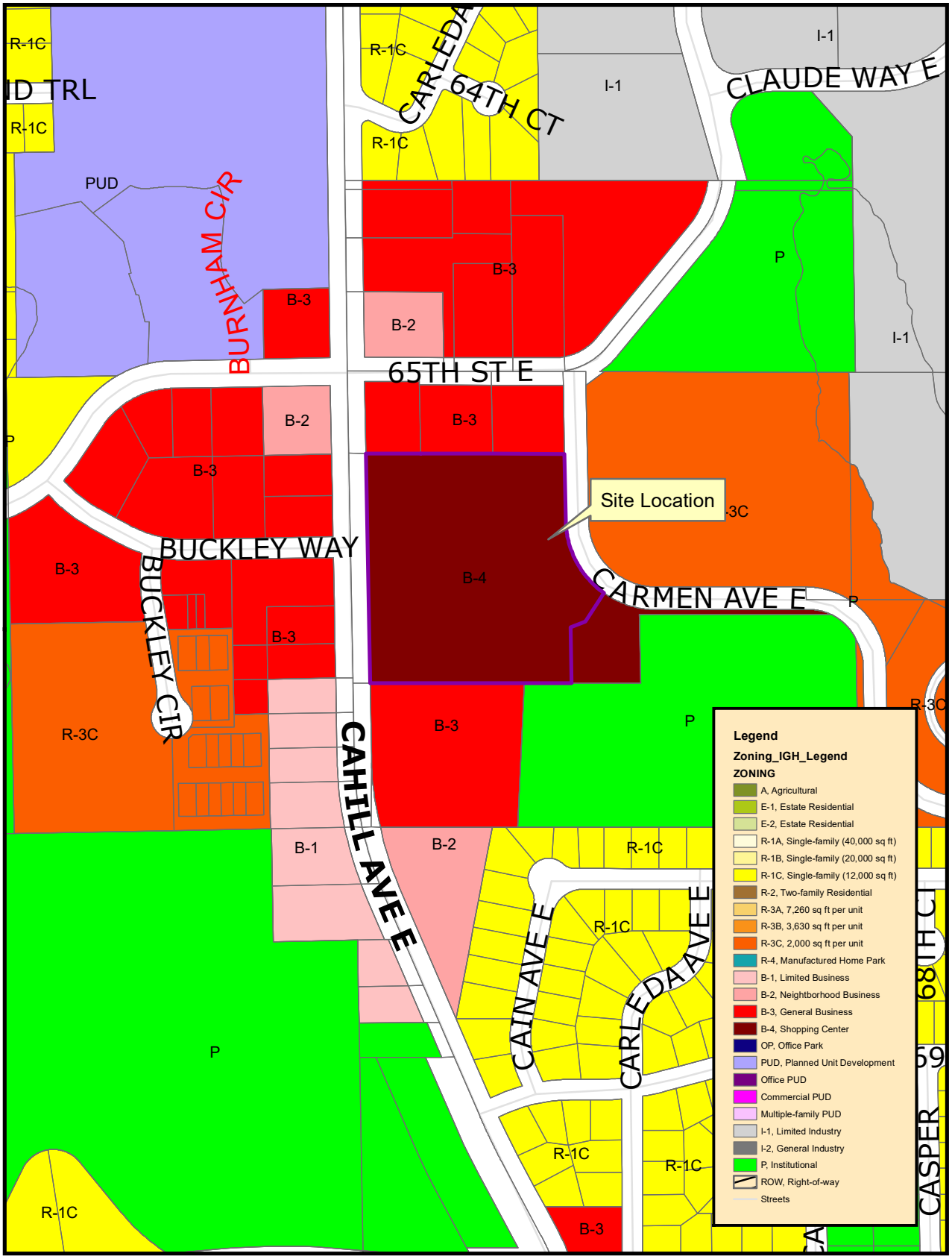

THIS DRAWING IS NEITHER A LEGALLY RECORDED MAP NOR A SURVEY AND IS NOT INTENDED TO BE USED AS ONE. THIS DRAWING IS A COMPILATION OF RECORDS, INFORMATION AND DATA LOCATED IN VARIOUS CITY, COUNTY AND STATE OFFICES AND OTHER SOURCES AND IS TO BE USED FOR REFERENCE PURPOSES ONLY. THE CITY OF INVER GROVE HEIGHTS IS NOT RESPONSIBLE FOR ANY INACCURACIES HEREIN CONTAINED
Map produced by the City of Inver Grove Heights GIS Dept.
Copyright© City of Inver Grove Heights 2020

N

Exhibit A

Zoning and Location Map

AmericInn Hotel & Suites is seeking a first time interim use permit for the parking lot space located at 6600 Cahill Ave Inver Grove Heights,MN 55076 (behind Aldi's grocery store) in order to accommodate the vehicles that use the Park, Sleep, & Fly reservation system. The lot includes and is not limited to; added lighting, added security cameras, along with signs posted of active surveillance, a security guard as well as a planned guard post.

The operation is for Park, Sleep & Fly which accounts for a large chunk of hotel traffic in and around Inver Grove Heights, MN. Guests will be parking their vehicles on the offsite lot, and subsequently traveling to the airport via the hotel shuttle for their scheduled vacation. Upon return, the shuttle will bring the guests back to their vehicles, and the guests will then leave. These packages include 1 or 2 nights' stay at the hotel, either before or after (sometimes both) their trip. The guest's vehicle information (make, model, and plate) and trip information (days parking, return day, flight, time) are all kept track of at the hotel, and each vehicle is assigned a number and slip, which guests are instructed to leave on the dashboard of their vehicle. This way, all vehicle information and guest information can be pulled up immediately, as well as details of their trip if there are any questions as to whether a vehicle is a part of this operation or not.

EXHIBIT FOR PROPOSED INVER GROVE HOSPITALITY PARKING SPACES

AT VILLAGE SQUARE

6600 CAHILL AVENUE DAKOTA COUNTY, INVER GROVE HEIGHTS, MINNESOTA 55076

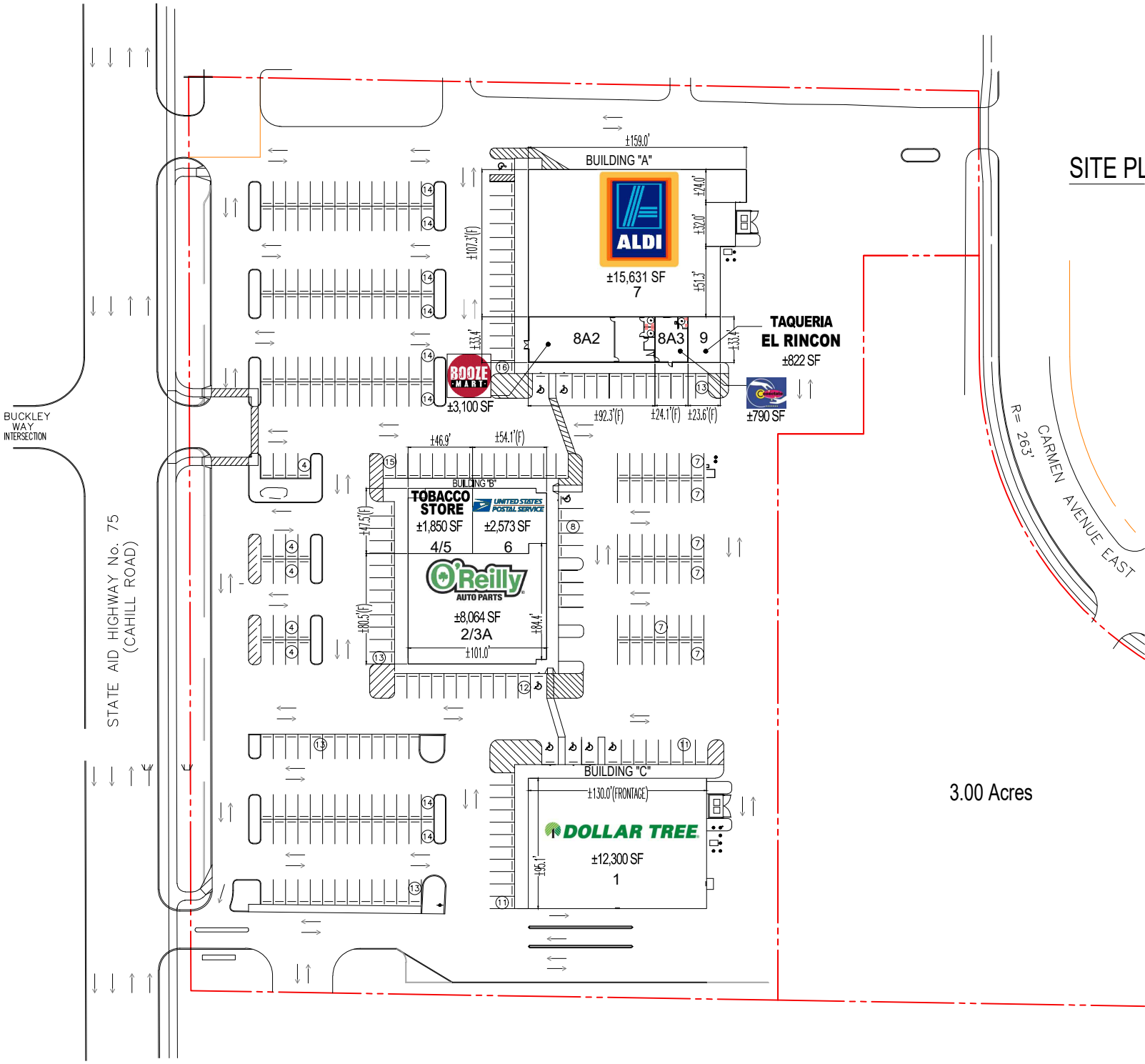

EXISTING CONDITIONS

OPTION - A2.0
SCALE : 1" = 100'
Pg 1 of 2

EXHIBIT FOR PROPOSED INVER GROVE HOSPITALITY PARKING SPACES

AT VILLAGE SQUARE

6600 CAHILL AVENUE DAKOTA COUNTY, INVER GROVE HEIGHTS, MINNESOTA 55076

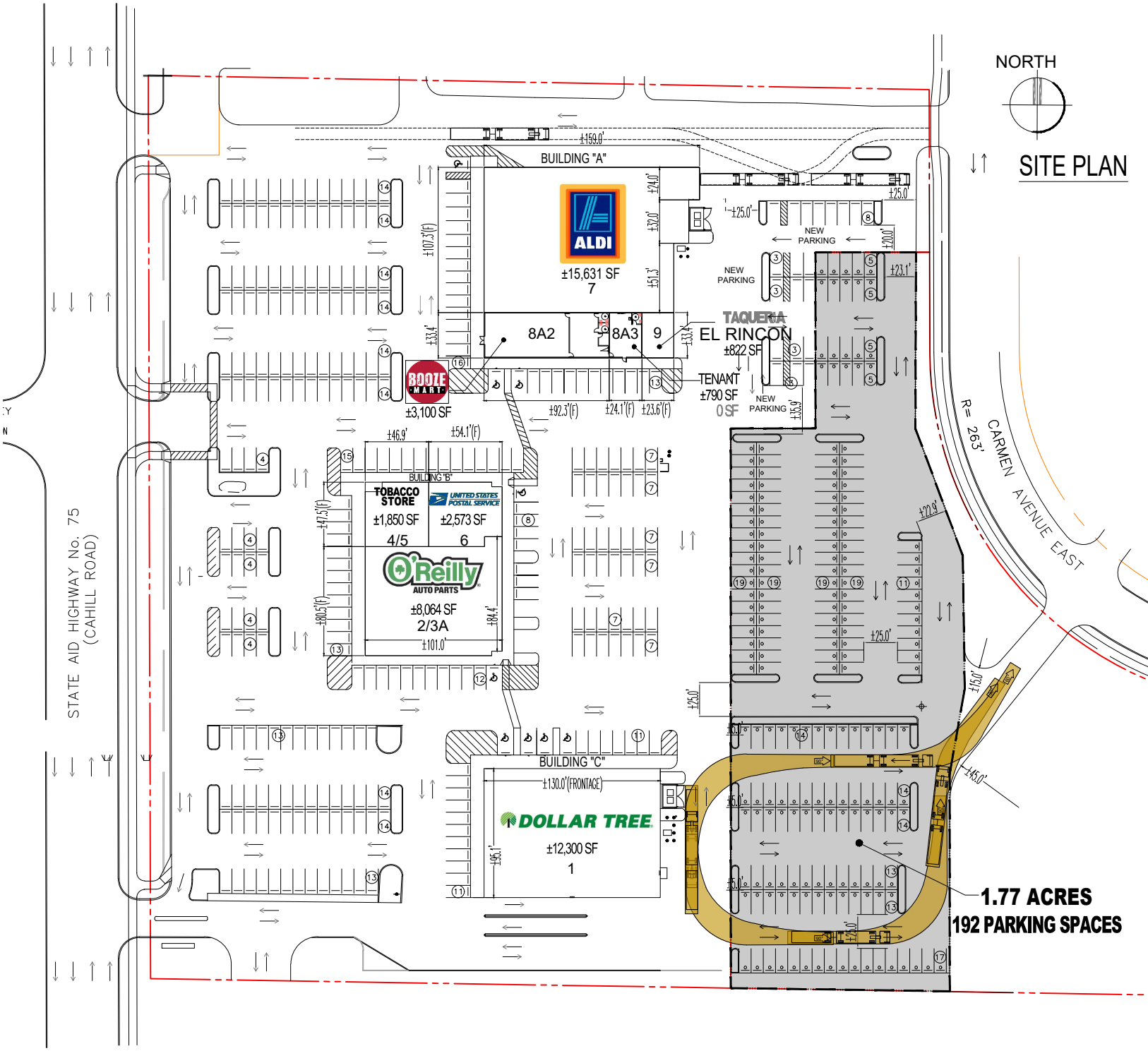

PROPOSED PREMISES

PREMISES

OPTION - A2.0
SCALE : 1" = 100'
Pg 2 of 2

Agenda Item 5.A.

Planning Commission Report

MEETING DATE:	August 20, 2024
CASE NO:	24-21NCUC
APPLICANT:	BFI Waste Systems
PROPERTY OWNER:	Same.
REQUEST:	Discussion Only
LOCATION:	2495 117th Street East
COMPREHENSIVE PLAN:	
ZONING:	
STAFF CONTACT:	Allan Hunting, 651.450.2554

ACTION REQUESTED

The Planning Commission is asked to review, discuss, ask questions and provide general feedback related to Pine Bend Landfill's vertical capacity expansion request. There are two attachments to this report which should be reviewed prior to the meeting; Barr Engineering Draft Memo (dated July 18, 2024), and 2018 Conditional Use Permit. Pine Bend Landfill's application and City of Inver Grove Heights Memo (dated May 22, 2024) are included in the packet for reference only. At the upcoming September 17, 2024, Planning Commission meeting, the Commission will be asked to review and make recommendations on a draft ordinance and resolutions presented by staff. Any Planning Commission members who were unable to attend the June 25th joint Work Session with the City Council, Planning Commission and Environmental Advisory Commission are also asked to review the recording of that meeting, which can be found at https://townsquaretv.granicus.com/player/clip/18761.

BACKGROUND

The Pine Bend Landfill consists of approximately 323 acres located at 2495 117th Street, between Highways 52/55 and Rich Valley Boulevard. The Landfill is a sanitary landfill, by ordinance definition, that accepts solid waste for disposal, including mixed municipal solid waste, non-hazardous industrial solid waste, construction debris and demolition debris, non-infectious waste, and asbestos. The landfill currently has a permitted airspace design capacity of 33,937,400 million cubic yards, including final cover. As of August 2023, the landfill had a remaining permitted airspace design capacity of approximately 2,986,936 cubic yards, including final cover. The landfill currently estimates an annual fill rate of approximately 600,000 cubic yards. This amount, however, can vary significantly depending on various factors.

The landfill is proposing a vertical capacity expansion of 8,185,800 cubic yards, including 7,888,250 cubic yards of waste and 297,550 cubic yards of final cover material. This vertical capacity expansion is referred to as Phase 7. Phase 7 design proposes to vertically extend the currently permitted 3:1 final cover slopes around the perimeter of the landfill. The design provides for increased capacity vertically without increasing the landfill footprint horizontally. The expansion would extend the life of the landfill about 13.6 years and increase the landfill's elevation by approximately 86.8 feet at the

highest point.

SPECIFIC REQUESTS

The proposal requires the City's approval of the following:

- A Zoning Ordinance Amendment to allow a vertical capacity expansion as a conditional use, providing the landfills have a non-conforming use certificate, are in compliance with that certificate, and meet other conditions regarding final cover, liners, leachate collection, gas extraction, height, property boundaries, capacity, and acceptable wastes.
- A Conditional Use Permit to allow a vertical capacity expansion of 8,185,800 cubic yards, including 7,888,250 cubic yards of waste.
- A Non-Conforming Use Certificate Amendment to allow the capacity expansion and maximum elevation increase.

PINE BEND LANDFILL BACKGROUND

The Pine Bend Landfill initially received a Conditional Use Permit (CUP) for its operation in 1975. The landfill became a legal non-conforming use in 1991 when the City adopted a Zoning Ordinance Amendment. That amendment prohibited sanitary landfills, such as Pine Bend's, created the Integrated Resource Management Overlay Zoning District, and placed that overlay zoning district on the Pine Bend Landfill and other properties in the area. The overlay zoning district prohibits certain waste industries, restricts and regulates other waste industries, and requires waste industries to be concentrated in the southeast industrial area of the City.

Since there were numerous questions regarding how the City zoning ordinance's non-conforming regulations applied to the landfill, the City and the landfill entered into a Non-Conforming Use Certificate (NCUC) in 1995. The NCUC resolved uncertainties for both the City and the landfill. It clarified the zoning status of the landfill, specified the rights and responsibilities of the landfill, and provided the City with more specific controls which had not been clearly defined in the previous conditional use permit.

Since the adoption of the NCUC in 1995, the City has approved several additional requests by Pine Bend. Most of these requests were for accessory uses or minor revisions, such as an energy recovery facility for the generation of electricity, open storage of trucks and trailers, a revised landscaping plan, a modified elevation and grading plan, a compost facility, and stockpiling of soils. In 2004, the City approved a capacity expansion of 5.6 million cubic yards. This expansion was primarily a vertical expansion over previously filled areas and a small horizontal expansion where the landfill offices are located.

In 2018, the City approved a side slope capacity expansion of 3.53 million cubic yards. This resulted in a new CUP, NCUC amendment, and Ordinance Amendment which are the current City agreements with Pine Bend Landfill. Subsurface gas migration was identified as a major issue of concern to the City during the 2018 application review, and as a result a new condition related to subsurface gas migration was added to the 2018 CUP. This requires Pine Bend Landfill to achieve compliance with Minnesota Rule 7035.2815, Subpart 11, Gas monitoring, collection, and treatment system which states: The concentration of any explosive gas must not exceed its lower explosion limit at the property boundary or 25 percent of its lower explosion limit in and around facility structures or any other on-site monitoring point. A gas monitoring, collection, and treatment system must be designed to meet the requirements of items A to G [of Subpart 11]. Per the 2018 CUP, compliance with this rule must be achieved for six consecutive months as certified by a professional engineer prior to whichever occurs first: 1) filling of waste beyond 30.00 million cubic yards (excluding final cover) of the Pine Bend Sanitary Landfill capacity of 32.13 million cubic yards (excluding final

cover); or 2) January 1, 2025. As of July 19, 2024, compliance has still not been achieved by Pine Bend Landfill.

EVALUATION OF REQUEST

2024 PINE BEND LANDFILL REQUEST AND CITY REVIEW

In June 2022, Pine Bend Landfill made application to the State of Minnesota Pollution Control Agency (MPCA) for the proposed vertical capacity expansion currently under review by the City. The MPCA then prepared an Environmental Assessment Worksheet (EAW) for the expansion. In November 2023, the EAC and City Council reviewed the EAW and submitted comments to the MPCA. The MPCA completed the EAW process by making a finding of a negative declaration, meaning that a more involved Environmental Impact Statement (EIS) was not necessary.

The City, with Barr Engineering's assistance, performed four rounds of technical review of the June 2022 Application and September 2022 Addendum that focused on 12 technical topics: waste acceptance, ground water monitoring system, leachate recirculation, solid waste composting, ground water quality, surface water management, waste capacity, liner and leachate collection system design, gas monitoring and gas extraction/treatment systems, final cover design, closure, post-closure, contingency action, operation and maintenance plans, and final assurance cost estimates. In October and November 2023, the EAC and City Council approved the City's technical review memo that included all recommendations submitted to Pine Bend Landfill and the MPCA. Pine Bend Landfill subsequently modified the June 2022 Application and September 2022 Addendum based on comments provided by the City during this process. The May 22, 2024, final technical review that summarizes all correspondence between the City/Barr and Pine Bend Landfill is attached to this packet for reference only.

Before the MPCA can act on Pine Bend Landfill's MPCA application, the local governments of City of Inver Grove Heights and Dakota County must receive and act on expansion applications submitted by Pine Bend Landfill first. Pine Bend Landfill submitted an application to the City of Inver Grove Heights on June 17, 2024, to initiate this process with the City.

Barr Engineering's draft Memo (dated July 18, 2024), reviews Pine Bend Landfill's City application. During this review, Barr Engineering paid particular attention to waste capacity, groundwater quality and trends, surface water, and gas migration and trends. Barr's review states the key environmental-related considerations related to the Phase 7 expansion are:

- Potential negative impacts would be increased visibility from nearby properties, and a potential increase in litter and odor due to the proposed increased landfill height.
- Landfill gas is currently collected, cleaned, and conveyed into a nearby natural gas pipeline. Additional landfill gas generated by the increased waste disposal would increase the quantity of gas supplied to the natural gas pipeline and therefore would be an environmental benefit, assuming the existing operation has the capacity to process additional gas.
- It is not expected that offsite subsurface migration of landfill gas would increase with the proposed Phase 7 expansion because it is believed that the source of the subsurface gas is waste in the old unlined area. However, the issue of how to reduce or mitigate the existing subsurface gas migration remains.
- There is a potential negative environmental impact to surface water because the proposed Phase 7 expansion includes an increase in the amount of 3:1 (horizontal:vertical) sideslopes that will increase the rate of surface water runoff and potentially increase the amount of erosion on the sideslopes. However, these potential negative environmental impacts are

mitigated with the proposed final cover and stormwater management systems that are designed to accommodate the steeper sideslopes.

City staff, Barr Engineering and the City Attorney will complete the analysis of Pine Bend Landfill's request related to nuisances, City infrastructure, City services and environmental impacts next month. The packet for the September 17th meeting will include the final staff report, a final report from Barr Engineering, and draft ordinance and resolutions.

FISCAL IMPACT

A draft Host Community Agreement identifying host fees associated with this expansion request will be discussed by the City Council at a future public meeting.

ALTERNATIVES

N/A

RECOMMENDATION

Staff requests the Planning Commission reviews, discusses, asks questions and provides general feedback related to Pine Bend Landfill's vertical capacity expansion request. At the September 17th meeting, the Planning Commission will be asked to consider approval of a draft ordinance and resolutions presented by staff.

ATTACHMENTS

1. Barr Engineering Draft Memo (dated July 18, 2024)
2. 2018 Conditional Use Permit
3. Pine Bend Landfill Application (revised July 2024)
4. City of Inver Grove Heights Memo (dated May 22, 2024)
5. Plan Set

2024-07-18 City Review Draft

resourceful. naturally.
engineering and environmental consultants

BARR

Note: This draft letter is a work in progress and recommendations and conclusions in this draft may change based on a thorough review of PBL's June 2024 City Application and ongoing discussions with the City. The final version to be provided to the City will include updates to the recommendations and conclusion if needed.

[date]

Ms. Ally Sutherland
Environmental Specialist
City of Inver Grove Heights
8150 Barbara Avenue
Inver Grove Heights, MN 55077-3412

Re: Pine Bend Landfill (PBL) Phase 7 Expansion – City Application Review

Dear Ms. Sutherland:

This letter presents Barr Engineering Co.'s (Barr's) review of the Pine Bend Landfill (PBL) "Application Submittal to the City of Inver Grove Heights for the Pine Bend Landfill – Phase 7 Development," prepared by Stantec Consulting Services Inc., dated June 2024 (June 2024 City Application).

This letter includes:

- an executive summary
- brief summaries of the June 2024 City Application and the City's regulatory history of PBL,
- a history of recent requests and approval regarding PBL
- City technical review of PBL's permit application to the MPCA including key technical issues and associated recommended modifications for the amended Non-Conforming Use Certificate (NCUC), new Conditional Use Permit (CUP), and amended Zoning Ordinance
- a discussion of environmental-related considerations from the proposed Phase 7 expansion, and
- summary and conclusions

Executive Summary

PBL is seeking approval for a proposed vertical expansion (Phase 7) that would increase the landfill's approved height by approximately 87 feet and increase its airspace capacity (waste and cover material) by approximately 8.2 million cubic yards. The Phase 7 expansion would fill waste over a liner and leachate collection system that was approved as part of the 2018 Phase 6 expansion.

Phase 7 would not change the landfill's the aerial footprint.

The City, with Barr's assistance, performed a detailed technical reviewed PBL's Phase 7 MPCA solid waste permit application. PBL addressed all items identified by the City/Barr review and satisfactorily modified its MPCA permit application.

Key environmental-related considerations related to the Phase 7 expansion are:

- Potential negative impacts would be increased visibility from nearby properties, and potential increase in litter and odor due to the proposed increased landfill height.

- Landfill gas is currently collected, cleaned, and conveyed into a nearby natural gas pipeline. Additional landfill gas generated by the increased waste disposal in Phase 7 would increase the quantity of gas supplied to the natural gas pipeline and therefore would be an environmental benefit, assuming the existing operation has the capacity to process additional gas.
- It is not expected that offsite subsurface migration of landfill gas would increase with the proposed Phase 7 expansion because it is believed that the source of the subsurface gas is waste in the old unlined area, however the issue of how to reduce or mitigate the existing subsurface gas migration remains.
- Potential negative impacts to surface water are mitigated with the final cover system and surface water design and management system.

If the City is in agreement with the Phase 7 expansion, it will need to amend the NCUC, issue a new CUP, and amend its ordinance. Barr's recommendations for these three documents are below:

NCUC Amendment:

- [To be determined]

New CUP:

- [To be determined]

Ordinance Amendment to City Code Section 10-13E-6:

- [To be determined]

Summary of June 2024 City Application

The June 2024 City Application contains information regarding the proposed Phase 7 expansion at PBL including general project description, facility and design information, operational information, a discussion of potential environmental and land use impacts, and additional information regarding the host community fee, compliance history, and status of non-City permits and approvals.

The June 2024 City Application also includes a solid waste management plan, permit-level plan sheets, a geotechnical analysis, stormwater management model and calculations, financial assurance cost estimates for closure, postclosure, and contingency action, and 3D view modeling.

City Regulatory History of PBL

In general City Resolution No. 6465 (1995 NCUC) established, among other things, limits to the waste capacity and maximum elevation of PBL. City Resolution No. 04-48 (2004 CUP) and City Resolution No. 18-69 (2018 CUP) allowed an increase to the capacity of PBL. Below is a brief summary of the City's past regulation of PBL.

NCUC History

- City Resolution No. 6465 (1995 NCUC) – "A Resolution Granting a Non-Conforming Use Certificate for Pine Bend Sanitary Landfill for a Compost Facility and a Sanitary Landfill," dated November 27, 1995. The 1995 NCUC was granted to PBL subject to terms, conditions, and

DRAFT

qualifications contained in the 1995 NCUC. The 1995 NCUC granted a total airspace capacity (not including final cover) of 23.3 million cubic yards and a maximum elevation of 1020 feet above mean sea level.

- City Resolution No. 02-32 (2002 NCUC Amendment) – "Resolution Amending Resolution No. 6465, Granting a Non-Conforming Use Certificate for Pine Bend Landfill by Modifying the Phasing Plan, Maximum Elevation, and Final Grading and Stormwater Plans", dated March 11, 2002. The 2002 NCUC Amendment reduced the maximum elevation of Pine Bend Landfill to 1010 feet above mean sea level.

- City Resolution No. 04-49 (2004 NCUC Amendment)– "A Resolution Amending Resolution No. 6465 Granting a Non-Conforming Use Certificate for Pine Bend Sanitary Landfill for a Sanitary Landfill", dated March 22, 2004. The 2004 NCUC Amendment established that the remaining airspace capacity as of October 1994 was 5.65 million cubic yards and limited the maximum elevation of PBL to an elevation of 1,019 feet above mean sea level.

- City Resolution No. 18-70 (2018 NCUC Amendment) – "A Resolution Amending Resolution No. 6465 Granting a Non-Conforming Use Certificate for Pine Bend Sanitary Landfill for a Sanitary Landfill", dated April 9, 2018. The 2018 NCUC Amendment :

    - Amended Exhibit D of the 1995 NCUC to add Appendix C (28 permit design plan sheets) and Appendix D (Stormwater Management Model and Calibrations) from the "Application Submittal to the City of Inver Grove Heights for the Pine Bend Landfill – Phase 6 Development" prepared by Wenck Associates dated revised February 2018.
    - Did not change the airspace capacity or maximum elevation.

CUP History

- City Resolution No. 6330 – "Approving a Conditional Use Permit for an Energy Recovery Facility for the Generation of Electricity in the General Industry (I-2) Zoning District," dated May 30, 1995.

- City Resolution No. 04-48 (2004 CUP) - "Resolution Approving a Conditional Use Permit to Allow an Airspace Capacity Expansion of the Pine Bend Sanitary Landfill," dated March 22, 2004. The 2004 CUP granted an airspace expansion which brought the total airspace (not including final cover) to 28.6 million cubic yards but did not change the maximum elevation.

- City Resolution No. 18-69 (2018 CUP) – "Resolution Approving a Conditional Use Permit to Allow a Side Slope Capacity Expansion of Pine Bend Landfill", dated April 9, 2018. The 2018 CUP:

    - Granted an airspace expansion which brought the total airspace (not including final cover) to 32.13 million cubic yards but did not change the maximum elevation.
    - Adopted the terms and conditions in the 2004 CUP and then indicated that the 2004 CUP terms and conditions are superseded by the 2018 CUP.
    - Required that the 2004 capacity expansion and the 2018 side slope capacity expansion conform to the 2003 Application to the City, 2002 and 2003 plan sheets, November 2003 response to comments, and the 2018 Application to the City.

DRAFT

- Limited the areas of the 2004 capacity expansion and the 2018 side slope capacity expansion.
- Required compliance with numerous historical CUPs and amendments, the NCUC and amendments.
- Made 1995 NCUC, section 5 through 10 applicable to the 2018 CUP.
- Restricted the types of waste to be disposed of in the 2004 capacity expansion and the 2018 side slope capacity expansion.
- Prohibited vehicles coming to PBL to not queue on 117th street.
- Required that, if the sanitary sewer is extended to PBL, PBL pay its share and connect the leachate collection system to the sanitary sewer as soon as the City accepts the sanitary sewer for use.
- Identified the hours of operation for PBL.
- Required compliance with the 2015 MPCA Solid Waste Permit and in addition, allowed alternative groundwater trend analysis, conduct additional investigations when hydrogeologic conditions change or continued release of contaminants to groundwater warrant as determined by the City Council, and allows the City Administer to waive water sampling in the case of extenuating circumstances.
- Identified numerous requirements for the dual gas/leachate management system.
- Required compliance with the 2015 MPCA Solid Waste Permit for liner leak detection and leachate collection, conveyance, storage, and treatment.
- Required achieving compliance with Minnesota Rule 7035.2815, subpart 11 regarding landfill gas migration for six consecutive months prior to, filling beyond 30 million cubic yard or January 1, 2025, whichever occurs first. Maintain an MPCA air emission permit for rental of an enclosed flare to serve as contingency for managing landfill gas.
- Required both PBL's owner and operator to be responsible for complying with the CUP.
- Stipulated that breach of the Host Community Agreement is deemed a violation of the CUP.
- Indicated that the CUP becomes effective upon execution of the Third Restated and Amended Host Community Agreement.

Ordinance History

- City Ordinance No. 721. On April 22, 1991 the City adopted Ordinance No. 721, which amended the City Zoning Code, Section 515.43, "I-2" General Industry District, and made mixed municipal solid waste disposal facilities (among others) prohibited uses. Ordinance No. 721 permitted prohibited uses that existed prior to April 22, 1991.

- City Ordinance No. 850. On November 27, 1995 the City adopted Ordinance 850 - "An Ordinance Establishing a Procedure for the Consideration of Nonconforming Use Certificates", amended the City Zoning Code to permit owners of a prohibited use to apply for a NCUC.

DRAFT

- City Ordinances No. 851 and 852. On November 27, 1995 the City adopted Ordinance 851 - "An Ordinance Establishing City Code Section 550 Integrated Resource Management Overlay Zoning District" and Ordinance 852 – "An Ordinance Rezoning Property to "IRM", Integrated Resource Management Overlay District", amended the City Zoning Code to create an Integrated Resource Management Overlay District which included PBL.

- City Ordinance No. 1084 (2004 Ordinance Amendment) – "An Ordinance Amending Inver Grove Heights City Code Section 515.80. Subd. 33 (E) by Adding a Conditional Use Permit for the Expansion of the Airspace of an Existing Sanitary Landfill", dated March 22, 2004.

- City Ordinance No. 1351 (2018 Ordinance Amendment) – "An Ordinance Amending Inver Grove Heights City Code Section 10-13E-6 Relating to Expansion of the Air Space of an Existing Sanitary Landfill", dated April 9, 2018 increased the percentage capacity allowed and increased area of final cover.

Brief History of Recent Requests and Approvals

PBL was first issued a solid waste permit by the MPCA in 1971. Since then, the MPCA solid waste permit has been reissued numerous times and most recently on July 30, 2015 and modified on May 31, 2019. The July 30, 2015 permit (with 2019 modification) authorized the Phase 6 sideslope expansion of the landfill by 4.1 million cubic yards to bring the total permitted capacity to 33.9 million cubic yards (including final cover). Below is a brief history of recent MPCA- and City-related requests and actions related to PBL.

City Review of PBL Permit Application to the MPCA

PBL submitted a "Request for Major Modification of Permit #SW-45," prepared by Stantec Consulting Services Inc., dated June 2, 2022, including the addendum dated September 15, 2022 (June 2022 Application and September 2022 Addendum) to the MPCA.

The June 2022 Application and September 2022 Addendum proposes an airspace capacity expansion of 8.2 million cubic yards over the existing landfill footprint which would bring the total permitted capacity to 42.1 million cubic yards including cover soils and an elevation increase of 86.8 feet to a maximum elevation of 1105.8 by extending the existing 3:1 (horizontal:vertical) sideslopes around the existing landfill footprint including filling over the liner and leachate collection system previously installed over old unlined waste. This proposed expansion is referred to as the Phase 7 expansion.

The City, with Barr's assistance, performed four rounds of technical review of the June 2022 Application and September 2022 Addendum that focused on these twelve topics:

I. Waste Acceptance
II. Groundwater Monitoring System
III. Leachate Recirculation
IV. Solid Waste Composting
V. Groundwater Quality
VI. Surface Water Management

DRAFT

VII. Waste Capacity
VIII. Liner and Leachate Collection System Design
IX. Gas Monitoring and Gas Extraction/Treatment Systems
X. Final Cover Design
XI. Closure, Post Closure, Contingency Action, and Operations and Maintenance Plans
XII. Financial Assurance Cost Estimates

Following the City/Barr review, PBL subsequently modified the June 2022 Application and September 2022 Addendum via three memoranda prepared by Stantec Consulting Services Inc. as shown below. All City/Barr review recommendations have been adequately addressed by PBL via these three memoranda.

- February 2024 Response Memo with attachments,
- April 12, 2024 Response memorandum with attachments, and
- April 29, 2024 Response memorandum with attachment

The June 2022 Application and September 2022 Addendum and the three memoranda listed above comprise the 2022-2024 MPCA Permit Application.

More detailed information regarding the review of these topics is contained in the four rounds of City/Barr review letters and three PBL response memoranda noted above and can be provided if requested.

The MPCA is waiting for the City and County to complete their review and approval processes prior to reissuing the MPCA solid waste permit.

MPCA EAW

The MPCA prepared a draft Environmental Assessment Worksheet (EAW) for public review on October 31, 2023 that evaluated the current proposed Phase 7 expansion. The City, with Barr's assistance, provided extensive review and numerous comments on the draft EAW in a letter dated November 28, 2023. Numerous other parties also submitted comments on the draft EAW. Subsequently, the MPCA issued a final EAW and response to comments dated March 1, 2024. The final EAW concluded that proposed Phase 7 expansion project does not have the potential for significant environmental effects and that there is not a need for an Environmental Impact Statement.

City NCUC, CUP, and Zoning Ordinance Amendment Request

PBL is requesting that the City amend its NCUC, CUP, and zoning ordinance to allow the proposed Phase 7 expansion. The request is included in the June 2024 City Application discussed above.

Key Technical Issues and Recommended NCUC/CUP/Ordinance Modifications

From the above twelve technical topics included in the City/Barr review of PBL's permit application to the MPCA, there were four topics that were of particular importance as they relate to the City's NCUC, CUP, and Ordinance. The remaining eight technical topics did not directly relate to the City's NCUC, CUP, and Ordinance but are summarized briefly at the end of this section.

DRAFT

These four topics that are of particular importance are:

- waste capacity,
- groundwater quality and trends,
- surface water, and
- gas migration and trends and are discussed in detail below.

Recommendations for changes to the NCUC, CUP, and Ordinance and a discussion regarding environmental impacts (if any) are provided at the end of each topic.

Waste Capacity

PBL is permitted by the MPCA for a capacity of 33.94 million cubic yards which includes waste and cover material. The remaining capacity (including final cover) of PBL was approximately 1.05 million cubic yards at the end of 2023 based on PBL's 2023 Annual Report.

The June 2022 Application and September 2022 Addendum proposes an airspace capacity expansion 8,185,800 cubic yards over the existing landfill footprint by extending the existing 3:1 (horizontal:vertical) sideslopes around the existing landfill footprint including filling over the liner and leachate collection system previously installed over old unlined waste. This quantity includes the bottom liner drainage layer, waste, and final cover. The proposed expansion would increase the capacity of PBL to 42,123,200 cubic yards of waste and cover material.

The City-approved capacity of 32.13 million cubic yards is slightly less than the MPCA's because it excludes the final cover material.

The maximum height of PBL would increase approximately 87 feet from elevation 1,019 feet as approved in City Resolution 04-09, dated March 22, 2004 to an elevation of 1105.8 feet.

The estimated final closure date of the PBL is proposed to be extended approximately 13.6 years from approximately 2027 without the Phase 7 expansion to approximate 2040 with the Phase 7 expansion. This final closure date is based on an assumed fill rate for all waste types and final cover of 600,000 cubic yards per year.

A review of the design drawings was completed to verify the accuracy of the capacity information for the proposed expansion. Based on review of the design drawings in AutoCAD Civil3D software, it appears that the volumes shown in the June 2024 City Application are accurate.

Recommended NCUC/CUP/Ordinance modifications:

- New NCUC Amendment:
  - [To be determined]
- New CUP:
  - [To be determined]

DRAFT

Environmental Impacts:

- Because more waste will be disposed of at PBL with the proposed Phase 7 expansion, there would be associated potential negative environmental impacts related to groundwater and air emissions. These potential impacts would be mitigated by the approved 2018 sideslope expansion (Phase 6) liner and leachate collection system and the proposed final cover and gas collection systems.

Groundwater Quality and Trends

Based on our review, there are no changes being proposed to the groundwater monitoring system in the June 2022 Application and September 2022 Addendum or the revised June 2024 City Application.

Groundwater samples are collected from 22 monitoring wells located upgradient and downgradient from the landfill and 2 downgradient springs (Pipeline and Ravine Springs). Groundwater monitoring of flow direction and quality has been ongoing since the landfill began operating in 1971. Routine monitoring is conducted on a quarterly basis to facilitate the detection of releases to groundwater from the landfill in accordance with a sampling and analysis plan (SAP). The SAP establishes sampling methodologies, analytes, and quality assurance/quality control procedures. The SAP also provides for contingencies to increase monitoring intervals if certain water-quality levels are exceeded. Based on the contingency monitoring results, corrective action may be required.

Groundwater flows approximately southwest to northeast underneath the landfill, becoming primarily easterly along the northeast edge of the Crosby-American demolition landfill area located immediately north of PBL. The depth to the groundwater is considerable (over 100 feet in some locations). The water table is in glacial drift. Monitoring wells are completed both shallow and deep in the glacial drift and in the Prairie du Chien Group (limestone). Groundwater underneath the site eventually discharges into the Mississippi River, east of PBL.

Groundwater samples are analyzed for volatile organic compounds (VOCs), metals, polyfluoroalkyl substances (PFAS), and general geochemical parameters, such as temperature, specific conductance, and pH. As has been the case for many years, groundwater intervention limits (ILs) concentrations are occasionally exceeded for some VOC chlorinated organic compounds that are common in municipal waste (e.g., trichloroethylene, tetrachlorethylene, and biogeneic breakdown products of these chlorinated compounds). Microbial reduction of the chlorinated compounds takes place in the groundwater and the geochemical indicators of this process are part of the monitoring program. The final reductive (low oxygen) breakdown product is vinyl chloride, which is oxidized to carbon dioxide and water in the more oxidizing conditions that likely exists a further distance downgradient of the landfill. Total concentrations of VOCs have generally shown a downward trend over the past several years. Some temporal (sequential) increases are observed for individual parameters as breakdown occurs, which are expected.

Manganese concentrations have exceeded the IL at many groundwater wells and in the Pipeline Spring for many years. These elevated manganese concentrations may be due, in part, to low oxygen concentrations in the groundwater (i.e. reduced conditions) that could cause the

DRAFT

manganese to be converted to its soluble form and become mobile in groundwater. However, the manganese concentrations appear to be stable (i.e. neither an increasing nor decreasing trend). No further action is recommended at this time but the trends in concentrations of manganese and other metals should continue to be monitored to determine if remedial efforts downgradient from PBL should be performed.

PFAS compounds (i.e. perfluorcarbon compounds associated with Teflon, Scotchguard, etc.) have been monitored in the groundwater on a regular basis at PBL starting in 2011. The IL concentrations for four PFAS compounds (PFBA, PFOS, PFOA, and PFHxS) are 1,750 parts per trillion (ppt), 3.75 ppt, 8.75 ppt, and 11.75 ppt respectively, and have routinely been exceeded at numerous monitoring wells and at the two springs.

Temporal trends in PFAS compounds are very hard to quantify for a variety of reasons but the overall pattern is one of continuing presence of these constituents in groundwater and in the springs. It should be noted that remediation of PFAS compounds in groundwater is difficult because they do not biodegrade or otherwise react with the soil—they are very persistent. The need for the landfill to respond to the PFAS occurrences will largely be dependent on whether or not there are potential environmental and human health exposures.

Current NCUC/CUP: Section 5.6.1 of the 1995 NCUC requires approval by the City Council if certain percentages of the number of groundwater monitoring wells, monitoring frequency, or sampling parameters are proposed to be reduced. The baseline for determining these percentages is the June 1995 Permit Reissuance Application.

However, Item 10 of the 2004 CUP also describes the requirements for the groundwater monitoring system and sampling parameters based on the EnecoTech Report dated October 2003. Because the 2004 CUP was developed subsequent to the 1995 NCUC, it appears that the intent of the 2004 CUP monitoring system requirements was to supersede the 1995 NCUC requirements.

Recommended NCUC/CUP/Ordinance modification:

- [To be determined]

Environmental Impacts:

- The 2018 Phase 6 expansion installed a liner and leachate collection system over existing unlined waste. The proposed Phase 7 expansion is proposed to be located above the Phase 6 expansion liner and leachate collection system. The proposed Phase 7 would also include a final cover and a gas collection system. Because the liner and final cover will minimize the amount of precipitation that could migrate into the unlined waste and produce leachate that could migrate to groundwater and because the gas collection system will extract gas for beneficial use, the proposed Phase 7 expansion is not expected to have any significant negative environmental groundwater impact.

DRAFT

Surface Water

Barr reviewed the surface water management plan and modeling contained in the June 2022 Application and September 2022 Addendum. The proposed design uses benches placed generally at 40-foot (vertical) intervals along the 3:1 sideslopes to direct runoff from the build-out expansion area to cable-concrete-lined trapezoidal channels, which discharge through existing and proposed junction vaults, pipes, and culverts to existing stormwater ponds. HydroCAD version 10.10 was used to simulate rainfall-runoff from the site. According to the proposed plan, the existing ponds would not overflow from the site during the 100-year, 24-hour runoff event.

The 2018 NCUC Amendment added the 2018 stormwater model and calibrations as an amendment to NCUC Exhibit D.

Recommended NCUC/CUP/Ordinance modification:

- [To be determined]

Environmental Impacts:

- There is a potential negative environmental impact to surface water because the proposed Phase 7 expansion includes an increase in the amount of 3:1 (horizontal:vertical) sideslopes that will increase the rate of surface water runoff and potentially increase the amount of erosion on the sideslopes. However, these potential negative environmental impacts are mitigated with the proposed final cover and stormwater management systems that are designed to accommodate the steeper sideslopes.

Gas Migration and Trends

Landfill gas (primarily methane and carbon dioxide) is produced by the decomposition of solid waste under the anaerobic conditions that exist in landfills such as PBL. Methane can be a major concern at landfills due to its potential to migrate in the soil subsurface and accumulate in structures at explosive concentrations.

Minnesota Rule 7035.2815 Subp. [sic] 11 requires that the concentration of any explosive gas not exceed the Lower Explosive Limit (LEL) at the property boundary or 25 percent of the LEL in or around facility structures.

The existing gas management system at PBL consists of:

- Gas collection wells and piping
- The gas-to-natural gas processing plant
- The gas monitoring system

Based on the review of the Operations and Maintenance Plan in the August 2015 Application, the gas extraction system currently includes 190 gas extraction wells at the site and additional gas extraction wells are planned for Phases 5 and 6. These gas extraction wells are included in the proposed Phase 7 expansion design. The construction and installation of the additional gas extraction wells will be in accordance with the MPCA-approved design and PBL design standards.

DRAFT

Extracted gas is currently piped through laterals, sub-headers, and header piping to a landfill gas-to-natural gas plant and/or a flare. F

The gas monitoring system is comprised of the three continuous electronic monitoring devices located in occupied buildings at PBL and 39 methane (gas) monitoring probes completed at varying depths around the perimeter of the landfill. The Gas Management and Monitoring Plan indicates the probes are monitored quarterly unless a positive gas reading is recorded, in which case, monitoring is increased to monthly. In recent years, the gas probes have been monitored on a monthly or weekly basis, as a result of methane detections at multiple probes around the facility.

Historically, elevated concentrations of methane have been detected in several of the subsurface gas monitoring probes located along the eastern, southern, and western boundaries of PBL. Methane concentrations in the gas monitoring probes around the facility exceeded the LEL on numerous occasions over the years. Based on these monitoring results, it does not appear that the existing controls at the PBL meet the requirements of Minnesota Rule 7035.2815 Subp. 11. PBL has been working with the MPCA and City to address gas migration concerns and annually provides a status update on this work to the City Environmental Advisory Commission.

Based on review of the June 2024 City Application, proposed augmentations to the gas extraction systems includes:

- Vertical extension of existing gas extraction wells in the Phase 7 footprint
- Installation of new vertical gas extraction wells in the Phase 7 footprint
- Installation of a horizontal gas collection system beneath the final cover system in the Phase 6 and Phase 7 build outs where the proposed waste thickness is too thin for additional vertical gas wells

A dual gas and leachate extraction system has been operating in unlined Phases 1 and 2 of PBL since 2002. Twenty-six of the forty-six wells originally configured for dual extraction operations, plus two new recently installed pump stations (PS-1 and PS-2), were operated as dual extraction wells in 2013. Pumps were added to PS-1 and PS-2 in 2013 in order to make them operational. Nine additional pump stations (PS-3 through PS-11) are proposed to be installed in the unlined area as part of the Phase 6 and Phase 7 expansions.

<u>Current NCUC/CUP:</u> Section 2.3.9 of the 1995 NCUC allows PBL to control subsurface gas generated at the landfill by construction of probes, gas extraction wells, etc.

The 2018 CUP, item 12 included requirements for the dual gas/leachate extraction system that appear to be adequate without further modification.

<u>Recommended NCUC/CUP/Ordinance modifications:</u>

- [To be determined]

DRAFT

Environmental Impacts:

- The Phase 6 expansion included the addition of new pumping stations that could be used to increase the extraction of gas from the unlined area which is believed to be the source of the subsurface gas migration to the PBL property boundary. The proposed Phase 7 expansion does not appear to add any means to increase gas extraction from the unlined area but neither does it decrease gas extraction from this area. Therefore, the proposed Phase 7 expansion is not expected to have negative environmental impacts related to subsurface gas migration.

Summary of Eight Remaining Technical Topics

The remaining eight technical topics (waste acceptance, groundwater monitoring system, leachate recirculation, solid waste composting, liner and leachate collection system design, final over design, closure, post closure contingency action, and operations and maintenance plans, and financial assurance cost estimates) are summarized below.

These eight technical topics were included in the four rounds of City/Barr review of PBL's MPCA permit application and three PBL response memoranda noted above. PBL's three response memoranda will be included in the pending MPCA solid waste permit and therefore do not need to be addressed directly in the NCUC, CUP, and Ordinance.

Waste Acceptance

There are no changes to PBL's waste acceptance.

The 2014 Solid Waste Management Plan describes the procedures that PBL uses to manage its mixed municipal and non-hazardous industrial solid waste. More specifically, the 2014 Solid Waste Management Plan describes:

- A customer notification procedure for review and acceptance of waste,
- A list of acceptable and unacceptable wastes plus a list of wastes that PBL does not accept,
- Waste categorization,
- Waste evaluation procedures,
- Use of waste as daily cover,
- Waste inspection and rejection procedures, and
- Numerous appendices including Dakota County Ordinance 110 and a Household Hazardous Waste Management Plan.

Groundwater Monitoring System

There are no changes to PBL's groundwater monitoring system.

DRAFT

Groundwater samples are collected from 22 monitoring wells located upgradient and downgradient from the landfill and two springs located downgradient from the landfill. Groundwater monitoring of flow direction and quality has been ongoing since the landfill began operating in 1971. Routine monitoring is conducted on a quarterly basis to facilitate the detection of releases to groundwater from the landfill in accordance with a sampling and analysis plan (SAP). The SAP establishes sampling methodologies, analytes, and quality assurance/quality control procedures. The SAP also provides for contingencies to increase monitoring intervals if certain water-quality levels are exceeded. Based on the contingency monitoring results, corrective action may be required.

Groundwater flows approximately southwest to northeast underneath the landfill, becoming primarily easterly along the northeast edge of the Crosby-American demolition landfill area located immediately north of PBL. The depth to the groundwater is considerable (over

100 feet in some locations). The water table is in glacial drift. Monitoring wells are completed both shallow and deep in the glacial drift and in the Prairie du Chien Group (limestone).

Groundwater underneath the site eventually discharges into the Mississippi River, east of PBL.

Leachate Recirculation

PBL is not proposing changes regarding potential future leachate recirculation.

If implemented, leachate would be performed over lined areas of PBL as described in the November 2013 Application. The leachate would be sprayed onto the waste working surface via tanker truck.

Solid Waste Composting

Solid waste composting was previously proposed as a January 2014 addendum to PBL's November 2013 Application.

City recommendations to model the potential odor and other air emissions from the proposed composting operation were not performed by PBL during the 2013 MPCA permitting process. However, based on discussions between the City and PBL and Republic Services' July 31, 2014, letter to the City, the City agreed that air quality modeling can be delayed until such time as PBL is ready to begin implementing plans to construct the organic waste compost facility. City approval is needed prior to SSOM composting implementation.

PBL has indicated that they intend to evaluate solid waste composting in the future and that it would be regulated by the MPCA and local governments including the City.

Liner and Leachate Collection System Design

The liner and leachate collection system for Phase 6 has been installed and only the liner and leachate system for one cell in Phase 5 (Cell 5F-2 at the location of existing landfill office and other infrastructure) remains to be installed. Phase 7 waste would be placed over Phase 6 which partially lies on top of the old unlined waste deposit.

Barr's review of the Liner and Leachate Collection System Design had an emphasis on consideration of construction of the system on top of the old unlined waste deposit. Barr's

DRAFT

review was concentrated on differential settlement regarding the liner system, leachate collection system, slope stability, and liner penetrations for gas recovery and leachate collection and piping.

PBL adequately responded to Barr's review recommendations and revised the MPCA permit application via the three memoranda prepare by Stantec.

Final Cover Design

Barr's review of the final cover design was concentrated on differential settlement regarding the cover system and surface water drainage system, slope stability, and liner penetrations for the gas and leachate system components.

PBL adequately responded to Barr's review recommendations and revised the MPCA permit application via the three memoranda prepare by Stantec.

Closure, Post Closure, Contingency Action, and Operations and Maintenance Plans

These plans do not have any significant changes from the August 2015 MPCA permit application.

Barr developed review recommendations related to closure phasing and closure acreages and the closure cost estimate used for financial assurance.

PBL adequately responded to Barr's review recommendations and revised the MPCA permit application via the three memoranda prepare by Stantec.

Financial Assurance Cost Estimates

The MPCA requires financial assurance for all mixed municipal solid waste landfills in Minnesota, including PBL. Financial assurance is intended to provide funds for closure, post-closure, and contingency action activities if the landfill owner goes out of business.

In response to Barr review recommendations, PBL adequately adjusted the financial assurance cost estimates and revised the MPCA permit application via the three memoranda prepare by Stantec.

In addition to the $643,631 bond that PBL has with Dakota County, the 2024 MPCA financial assurance estimates are:

Closure	$15,375,408
Postclosure	$9,175,254
Contingency Action	$1,163,414
total	$25,714,076

DRAFT

Additional Recommended NCUC/CUP/Ordinance Modifications

In addition to the recommended NCUC/CUP/Ordinance modifications discussed above, additional modifications are recommended as discussed below.

The 2018 NCUC Amendment amended the 1995 NCUC, Exhibit D to include the 28 permit design plan sheets included with the 2018 City Application.

Recommended NCUC/CUP/Ordinance modifications:

- New NCUC Amendment:
  - [To be determined]
- New CUP:
  - [To be determined]
- Ordinance Amendment to City Code Section 10-13E-6:
  - [To be determined]

Key Environmental-Related Considerations

Key environmental-related considerations related to the Phase 7 expansion are:

- Potential negative impacts would be increased visibility from nearby properties, and potential increase in litter and odor due to the proposed increased landfill height.
- Landfill gas is currently collected, cleaned, and conveyed into a nearby natural gas pipeline. Additional landfill gas generated by the increase waste disposal would increase the quantity of gas supplied to the natural gas pipeline and therefore would be an environmental benefit, assuming the existing operation has the capacity to process additional gas.
- It is not expected that offsite subsurface migration of landfill gas would increase with the proposed Phase 7 expansion because it is believed that the source of the subsurface gas is waste in the old unlined area, however the issue of how to reduce or mitigate the existing subsurface gas migration remains.
- There is a potential negative environmental impact to surface water because the proposed Phase 7 expansion includes an increase in the amount of 3:1 (horizontal:vertical) sideslopes that will increase the rate of surface water runoff and potentially increase the amount of erosion on the sideslopes. However, these potential negative environmental impacts are mitigated with the proposed final cover and stormwater management systems that are designed to accommodate the steeper sideslopes.

Summary and Conclusions

The City, with Barr's assistance, performed an extensive technical review of the June 2022 Application and September 2022 Addendum . PBL responded to the City/Barr review with application modifications which were deemed to be adequate.

DRAFT

The four major technical topics (waste capacity, groundwater quality and trends, surface water, and gas migration) are discussed above and require some modifications to the NCUC, CUP, and Ordinance. Additional NCUC, CUP, and Ordinance recommendations not related to the four major topics are also provided above.

Environmental considerations related to the proposed Phase 7 expansion (additional natural gas generation), increased visibility and potential for increased litter and odor are identified and discussed above.

Given PBL's adequate application modifications in response to the City/Barr technical review and the potential environmental benefit from the Phase 7 expansion, Barr believes the proposed Phase 7 expansion is reasonable and appropriate because:

- The type of waste being accepted does not change,
- The benefit of increased natural gas production
- The potential increase in odor and litter due to increased height and can be minimized by keeping the open working waste area as small as practicable and diligent litter prevention and cleanup
- Increased visibility is a concern for residential properties located north/northwest from PBL. Property owners in other directions are mostly non-residential and therefore the increased visibility would not be expected to negatively impact those property owners. The landfill height increase would occur gradually and thereby negative visual impact to nearby residents would hopefully be acceptable.
- Potential negative impacts to surface water are mitigated with the final cover system and surface water management design and management.

Sincerely,

Jeff Ubl, P.E

DRAFT

List of References

Sequencing Ordinance for Dakota County Ordinance 119, amended March 25, 1997 relating to need for city or township approval prior to County processing the license

Request for Major Modification of Permit #SW-45", prepared by Stantec Consulting Services Inc. (Stantec), dated June 2, 2022, including the addendum dated September 15, 2022 (June 2022 Application and September 2022 Addendum).City of Inver Grove Heights review recommendations letter dated November 28, 2023

City of Inver Grove Heights comment letter on draft Environmental Assessment Worksheet (EAW) for Request for Major Modification of MPCA Permit #SW-45 dated November 28, 2023

Stantec Consulting Services Inc. recommendations response memorandum dated February 12, 2024MPCA Findings of Fact, Conclusions of Law, and Order for a Negative Declaration on the need for an Environmental Impact Statement on the Pine Bend Landfill Vertical Expansion Project including response to comments on the Environmental Assessment Worksheet dated March 1, 2024

City of Inver Grove Heights review recommendations letter dated April 5, 2024

Stantec Consulting Services Inc. recommendations response memorandum dated April 12, 2024 City of Inver Grove Heights review recommendations letter dated April 23, 2024

Stantec Consulting Services Inc. recommendations response memorandum dated April 29, 2024

City of Inver Grove Heights review recommendations letter dated May 22, 2024

Application Submittal to the City of Inver Grove Heights for the Pine Bend Landfill – Phase 6 Development," prepared by Stantec Consulting Services Inc., dated June 2024 (June 2024 City Application)

Minnesota Statute 116.07, Subd. 4j relating to need for local government approval prior to MPCA permit issuance

CITY OF INVER GROVE HEIGHTS
DAKOTA COUNTY, MINNESOTA

RESOLUTION NO. 18-69

RESOLUTION APPROVING A CONDITIONAL USE PERMIT TO ALLOW A SIDE SLOPE CAPACITY EXPANSION OF PINE BEND LANDFILL

CASE NO. 07-36NCUC

PROPERTY LOCATED AT 2495 EAST 117TH STREET

WHEREAS, an application for a conditional use permit for a side slope capacity expansion of Pine Bend Landfill has been submitted by BFI Waste Systems of North America, LLC for property located at 2495 East 117th Street and legally described in Exhibit A and depicted in Exhibit B, attached hereto; and

WHEREAS, the side slope capacity expansion of Pine Bend Landfill is a conditional use in the IRM, Integrated Resource Management Overlay Zoning District; and

WHEREAS, the aforedescribed property is currently zoned I-2, General Industry and IRM, Integrated Resource Management Overlay Zoning District; and

WHEREAS, in accordance with Minnesota Statutes, Section 462.357, Sub. 3, a public hearing concerning the proposed conditional use permit was held before the Inver Grove Heights Planning Commission on February 20, 2018.

WHEREAS, an application for a conditional use permit for an airspace capacity expansion of Pine Bend Sanitary Landfill was submitted in 2003 by BFI Waste Systems of North America Inc. for the same property and that conditional use permit was approved by the City Council on March 22, 2004, per Resolution No. 04-48.

NOW, THEREFORE, BE IT RESOLVED, by the City Council of the City of Inver Grove Heights, that a conditional use permit for BFI Waste Systems of North America, LLC for the side slope capacity expansion of Pine Bend Landfill is granted for the aforedescribed property, subject to the following conditions:

AND BE IT FURTHER RESOLVED, that the conditional use permit for an airspace capacity expansion of Pine Bend Landfill, dated March 22, 2004 is hereby reaffirmed and ratified subject to the following conditions:

1. The side slope capacity expansion of 3.53 million cubic yards, not including the final cover system, when coupled with the airspace capacity limitation of the Non-Conforming Use Certificate of airspace capacity of 23.3 million cubic yards, and the 2004 conditional use permit expansion of 5.30 million cubic yards, not including the final cover system, shall not exceed 32.13 million cubic yards of airspace for disposed waste, not including the final cover system. The City and Pine Bend Landfill agree that prior to the airspace capacity expansion

allowed by this conditional use permit the remaining airspace capacity, as of December 2016, was 1.90 million cubic yards. The remaining airspace capacity will be recalculated each year as required by MPCA.

2. The terms and conditions of the conditional use permit for an airspace capacity expansion for Pine Bend Landfill, dated March 22, 2004 shall be the terms and conditions stated in this resolution and the terms and conditions in Resolution 04-48, dated March 22, 2004 are hereby superseded by this resolution.

3. The airspace capacity expansion granted March 22, 2004 and this side slope capacity expansion shall occur and be operated in substantial conformance with the following:

    a. Narrative and plans of "Application to the City of Inver Grove Heights for the Pine Bend Landfill", dated August 2003

    b. Twenty-six plan sheets, titled "Permit Application, Pine Bend Landfill–SW 45, prepared for BFI Waste Systems of North America, Inc.", dated February 2002, January 2003, and August 2003

    c. Response to comments for BFI Pine Bend Landfill, as prepared by Wenck Associates Inc., dated November 11, 2003

    d. "Application Submittal to the City of Inver Grove Heights for the Pine Bend Landfill – Phase 6 development, MPCA Permit #SW-45," revised February 2018

    To the extent that paragraphs 3a, 3b, and 3c conflict with paragraph 3d, paragraph 3d shall prevail.

4. The area of the 2004 capacity expansion shall be limited to the area defined as Phase 5 and the area of the 2018 side slope capacity expansion shall be limited to the area defined as Phase 6 on the approved plans.

5. Pine Bend Landfill shall comply with all terms and conditions found in:

    a. Resolution No. 6330 Approving a Conditional Use Permit for an Energy Recovery Facility for the Generation of Electricity, dated May 30, 1995

    b. Resolution No. 6465 Granting a Non-Conforming Use Certificate for Pine Bend Landfill for a Sanitary Landfill, dated November 27, 1995

    c. Resolution No. 2001-86 Approving a Conditional Use Permit for Open Storage for Truck and Trailer Storage/Parking, dated July 9, 2001

    d. Resolution 01-117 Adopting a Revised Landscaping Plan, dated September 10, 2001

e. Resolution No. 02-32 Amending the Non-Conforming Use Certificate by Modifying the Phasing Plan, Maximum Elevation, and Final Grading and Storm Water Plans, dated March 11, 2002

f. Resolution No. 02-127 Approving a Conditional Use Permit for the Stockpiling of Clean Soil Material as an Accessory Use to an Existing Landfill to a Maximum of 335,100 Cubic Yards, dated August 26, 2002

g. Resolution No. 04-48 Approving a Conditional Use Permit to Allow an Airspace Capacity Expansion of Pine Bend Landfill, dated March 22, 2004; as modified by this resolution.

h. Resolution No. 04-49 Amending Resolution No. 6465 Granting a Non-Conforming Use Certificate for Pine Bend Landfill for a Sanitary Landfill, dated March 22, 2004

i. Resolution No. 04-51 Declaring Lapse of Nonconforming Use Rights for Pine Bend Sanitary Landfill to Operate a Compost Facility, dated March 22, 2004

j. Resolution No. 04-50 Approving A Conditional Use Permit for the Stockpiling of Clean Soil Material as an Accessory Use to an Existing Landfill to a Maximum of 355,100 Cubic Yards, dated March 22, 2004

k. Resolution No. 18-____ Amending Resolution No. 6465 Granting a Non-Conforming Use Certificate for Pine Bend Sanitary Landfill for a Sanitary Landfill

6. The Non-Conforming Use Certificate, Section 5 through 10 inclusive, shall also apply to the side slope capacity expansion and the terms and conditions of those sections are made part of this Conditional Use Permit and incorporated by reference.

7. Notwithstanding anything to the contrary contained in Pine Bend Landfill's Solid Waste Management Plan, the types of waste to be disposed in the 2004 airspace capacity expansion and this side slope capacity expansion shall only include the following:

   a. Construction debris and demolition debris

   b. Infectious waste which has been processed so as to become non-infectious

   c. Mixed municipal solid waste from whatever source including, but not limited to, mixed municipal solid waste material from composting, energy recovery facilities, and recycling facilities and processes. The term mixed municipal solid waste shall be as defined in Section 1.29 of the "Non-Conforming Use Certificate for Pine Bend Sanitary Landfill for a Compost Facility and Sanitary Landfill," issued on November 27, 1995.

   d. Non-hazardous industrial solid waste including, but not limited to, industrial incinerator ash, all in accord with the Industrial Waste Management Plan. The term industrial solid waste shall be as defined in Section 1.24 of the "Non-Conforming Use

Certificate for Pine Bend Sanitary Landfill for a Compost Facility and Sanitary Landfill," issued on November 27, 1995.

e. Solid wastes approved by the MPCA for use as cover material including, but not limited to, foundry sands and certain sludges.

8. Vehicles coming into Pine Bend Landfill shall not queue onto 117th Street.

9. If sanitary sewer is extended to Pine Bend Sanitary Landfill, the Landfill shall connect the leachate collection/storage systems to the sanitary sewer, pay its pro rata share of special assessments (in conjunction with other lands served by the sanitary sewer extension) over a term determined by the City Council but not less than five years and not more than ten years, and pay connection and hook up charges, as soon as the sanitary sewer is accepted for use by the City.

10. Hours for the construction of the 2004 airspace capacity expansion and this side slope capacity expansion shall be:

Monday through Friday	6:00 AM to 8:00 PM
Saturday	6:00 AM to 4:00 PM

Upon the request of Pine Bend Sanitary Landfill, temporary extensions of hours or days of construction may be granted by the City Administrator.

11. Pine Bend Landfill shall comply with Minnesota Rules and the MPCA Solid Waste Permit issued July 30, 2015 regarding surface water and groundwater monitoring and groundwater compliance boundary requirements as well as the following special conditions:

a. As part of its annual report to the MPCA, Pine Bend Landfill may use alternative methods for the groundwater trend analysis, if approved in advance by the City.

b. Pine Bend Landfill shall conduct additional investigations, if required by the City Council, when hydrogeologic changes occur or continued release of contaminants to groundwater warrant, as determined by the City Council. Pine Bend Landfill shall start the investigation within 60 days after determined by the City Council, complete the investigation within 360 days including design for additional groundwater remedial measures, and implement remedial measures within 180 days of City Council's approval of remedial measures design.

c. Required water sampling may be waived by the City Administrator in conjunction with either the Community Development Director or Public Works Director, in the case of extenuating circumstances, such as inaccessibility caused by deep snow or wet soils. If such a waiver is granted, the City Council will be notified at its next regular meeting and the waiver shall be discussed at the next quarterly meeting with the City and Pine Bend Landfill and documented in the meeting minutes.

12. Pine Bend Landfill must comply with Minnesota Rules and the MPCA Solid Waste Permit issued July 30, 2015 regarding liner leak detection, and leachate collection, conveyance, storage, and treatment requirements as well as the following special conditions relating to the dual gas/leachate extraction system:

    a. As part of the annual report, due February 1 of each year, Pine Bend Landfill shall describe the system operations and maintenance, including quality and quantity of leachate collected, and provide recommendations for system modifications.

    b. Pine Bend Landfill shall perform the following and discuss efforts as part of the annual report, due February 1 each year, to:

        i. Operate, maintain, and update the dual gas/leachate extraction system to maximize leachate extraction to the greatest extent practicable

        ii. Lower pump intakes or provide an explanation of why pumps could not, or should not, be lowered

        iii. Allow one full year of "dry" operations before removing pumps or provide explanation regarding why the pumps need to be removed and why they cannot be reinstalled

        iv. Monitor leachate head level in wells after pumps are removed

        v. Evaluate the market availability of new pumps that could be installed in the dual gas/leachate extraction wells

        vi. Reinstall pumps in wells currently in the dual gas/leachate extraction system or provide an explanation of why the pumps could not, or should not, be reinstalled

        vii. Install pumps in existing wells and add them to the dual gas/leachate extraction system or provide an explanation of why the pumps could not, or should not, be installed

    c. Requirements for the dual gas/leachate extraction system may be waived by the City Administrator in conjunction with either the Community Development Director or Public Works Director, in the case of extenuating circumstances, such as inability to reinstall pumps or if it is technically unfeasible to operate or maintain the dual gas/leachate extraction system. If such a waiver is granted, the City Council will be notified at its next regular meeting and the waiver shall be discussed at the next quarterly meeting with the City and Pine Bend Landfill and documented in the meeting minutes.

13. Pine Bend Landfill must comply with Minnesota Rules and the MPCA Solid Waste Permit issued July 30, 2015 regarding the Phase 5 expansion area liner leak detection, and leachate collection, conveyance, storage, and treatment requirements.

14. Pine Bend Sanitary Landfill must achieve compliance with Minnesota Rule 7035.2815, Subpart 11 regarding landfill gas management, including future similarly applicable Minnesota Rule revisions, for six consecutive months as certified by a professional engineer prior to the following, whichever occurs first:

    a. Filling of waste beyond 30.00 million cubic yards (excluding final cover) of the Pine Bend Sanitary Landfill capacity of 32.13 million cubic yards (excluding final cover); or
    b. January 1, 2025.

    If compliance with this condition is not achieved, Pine Bend Sanitary Landfill and BFI Waste Systems of North America, LLC must temporarily cease accepting waste for disposal at the Pine Bend Sanitary Landfill until this condition is met; when the condition is met, waste may once again be accepted for disposal at the Pine Bend Sanitary Landfill.

    Until compliance is achieved for six consecutive months as required above, BFI Waste Systems of North America, LLC must present progress on its efforts to achieve compliance to the City of Inver Grove Heights Environmental Commission in the first quarter of every year and report progress in the annual report to the MPCA.

    All ongoing gas migration related work plans and reports must be submitted to the City for review and comment.

    The requirement contained above is not an election of remedies by the City and is not a waiver of the City's right and remedies under the conditional use permits or under the non-conforming use certificate or under any host community agreement.

    The City specifically reserves the right to take action to enforce Minnesota Rule 7035.2815, Subpart 11 and to exercise its rights and remedies under the conditional use permits and under the non-conforming use certificate or under any host community agreement with respect to any past, existing or future violations of Minnesota Rule 7035.2815, Subpart 11, including future similarly applicable Minnesota Rule revisions.

    No remedy conferred upon or reserved to the City in the conditional use permits or in the non-conforming use certificate or in any host community agreement shall be exclusive of any other available remedy or remedies, but each and every such remedy shall be cumulative and shall be in addition to every other remedy given under the conditional use permits or the non-conforming use certificate or in the host community agreement or now or hereafter existing at law or in equity or by statute. No delay or omission to exercise any right or power shall impair any such right or power or shall be construed to be a waiver thereof, but any such right and power may be exercised from time to time and as often as may be deemed expedient.

    The City acknowledges that BFI Waste Systems of North America, LLC reserves the right to request an amendment to the requirement contained herein.

Nothing contained herein shall be deemed an acceptance or approval by the City of the requested amendment or any indication that the City will adopt such amendment.

During the time that the Pine Bend Sanitary Landfill must temporarily cease to accept waste for disposal in the event the above condition is not met, Pine Bend Sanitary Landfill and BFI Waste Systems of North America, LLC must nonetheless continue to pay the City the fees and payments stated in Section 8 of the Third Restated and Amended Host Community Agreement dated April 9, 2018, by and among BFI Waste Systems of North America, LLC, Browning-Ferris Industries, Inc. and the City of Inver Grove Heights (as amended from time to time); and Pine Bend Sanitary Landfill and BFI Waste Systems of North America, LLC must meet and comply with the other obligations stated in the Third Restated and Amended Host Community Agreement (as amended from time to time) including, but not limited to, the Host Community Fee, the Minimum Monthly Payment, the Per Ton Payment, the Inducement Amount, the Donation and the Payment for Firefighting Costs and the payments required under Sections 8.12 and 8.13 of the Third Restated and Amended Host Community Agreement.

15. Pine Bend Sanitary Landfill shall maintain a Minnesota Pollution Control Agency air emission permit for a rental enclosed flare to serve as contingency capacity for managing landfill gas.

16. The owner and operator of Pine Bend Sanitary Landfill are both responsible for complying with the obligations and conditions contained in this Conditional Use Permit.

17. Breach of any Host Community Agreement between the City and BFI Waste Systems of North America, Inc. is deemed to be violation of this Conditional Use Permit.

18. This conditional use permit shall become effective only upon the execution of the Third Restated and Amended Host Community Agreement and only upon the Third Restated and Amended Host Community Agreement becoming effective.

Be it further resolved that the City Clerk is hereby authorized and directed to record a certified copy of this resolution at the Dakota County Recorder's Office.

Res. No. 18-69

Adopted by the City Council of the City of Inver Grove Heights this 9th day of April, 2018.

AYES: 4
NAYS: 0

CITY OF INVER GROVE HEIGHTS

By: _____
George Tourville, Mayor

Attest: _____
Michelle Tesser, City Clerk

(CITY SEAL)

STATE OF MINNESOTA)
) ss.
COUNTY OF DAKOTA)

On this 9th day of April, 2018, before me a Notary Public within and for said County, personally appeared George Tourville and Michelle Tesser to me personally known, who being each by me duly sworn, each did say that they are respectively the Mayor and City Clerk of the City of Inver Grove Heights, the municipality named in the foregoing instrument, and that the seal affixed to said instrument was signed and sealed on behalf of said municipality by authority of its City Council and said Mayor and City Clerk acknowledged said instrument to be the free act and deed of said municipality.

Kim A. Fox
Notary Public, State of Minnesota
My Commission Expires
January 31, 2020

_____
Notary Public

ACCEPTANCE

BFI Waste Systems of North America, LLC hereby accepts and agrees to the amendments and other provisions set forth in the foregoing Resolution.

Dated: May 23, 2018.

BFI Waste Systems of North America, LLC

By: _____

STATE OF Arizona)
) ss.
COUNTY OF Maricopa)

On this 23rd day of May, 2018, before me a Notary Public within and for said County, personally appeared John Nickerson, to me personally known, who being by me duly sworn, did say that he/she is the Vice President of BFI Waste Systems of North America, LLC, the limited liability company named in the foregoing instrument, and that the foregoing instrument was executed on behalf of the limited liability company by authority of the Boards of Governors of said entity and said Vice President acknowledged said instrument to be the free act and deed of the limited liability company.

HEATHER WOOD
NOTARY PUBLIC – ARIZONA
MARICOPA COUNTY
My Commission Expires
August 14, 2019

Notary Public

EXHIBIT A

Lot 1, Block 1, and Lot 1, Block 2, and Outlot A, Pine Bend Sanitary Landfill, Dakota County, Minnesota, according to the recorded plat thereof on file and of record with the Dakota County Recorder.

APPLICATION SUBMITTAL TO THE CITY OF INVER GROVE HEIGHTS FOR THE PINE BEND LANDFILL
Phase 7 Development
MPCA Permit #SW-45

June 2024

Revised July 2024

Prepared for:
BFI Waste Systems of North America, LLC
Pine Bend Landfill 2495
East 117th Street
Inver Grove Heights, MN 55077

Prepared by:
Stantec
One Carlson Parkway Suite 100
Plymouth, MN 55447

Project Number:
227706442

Table of Contents

1 INTRODUCTION 1.1
1.1 General Project Description 1.1
1.2 City Approval Requirements 1.1
1.3 Project Benefits 1.1

2 FACILITY INFORMATION AND DESIGN 2.1
2.1 Ownership and History 2.1
2.2 Types of Waste Received 2.4
2.3 Facility Users 2.4
2.4 Waste Flow/Site Capacity/Phasing 2.4
2.5 Phase 7 Landfill Expansion Engineering Design 2.5
2.6 Base Grades 2.6
2.6.1 Design 2.6
2.7 Liner Design 2.6
2.8 Leachate Collection System 2.7
2.8.1 Introduction 2.7
2.8.2 Drainage Layer System 2.8
2.8.3 Collection Pipes 2.8
2.8.4 Leachate Sump, Head Build-Up, and Removal 2.8
2.8.5 Leachate Leak Detection 2.9
2.8.6 Dual Extraction System 2.9
2.9 Final Cover 2.10
2.9.1 Design Overview 2.10
2.9.2 Final Cover Grades 2.11
2.9.3 Surface Water Management 2.12
2.10 Landfill Gas Management 2.14
2.10.1 Background 2.14
2.10.2 Gas Probe Management 2.15
2.10.3 Gas Migration Mitigation 2.15
2.10.4 Future Gas System Installation 2.17
2.10.5 Existing Extraction Wells 2.17
2.10.6 Horizontal Collectors 2.18

3 OPERATIONS 3.1
3.1 General Operations and Site Security 3.1
3.2 Hours of Operation 3.1
3.3 Employees 3.1
3.4 Equipment 3.2
3.5 Processing 3.3
3.6 Post-Closure, Contingency Action Plan and Financial Assurances 3.3
3.7 Total Facility Operating Permit 3.3

4 POTENTIAL ENVIRONMENTAL IMPACTS 4.1
4.1 Leachate 4.1
4.2 Methane 4.1
4.3 Noise 4.1
4.3.1 Landfill Equipment/Machinery Related to Waste Disposal 4.1
4.3.2 Landfill Equipment/Machinery Related to Construction 4.2
4.4 Litter, Vectors, and Odor 4.2
4.5 Fugitive Dust 4.3
4.6 Site Geology and Groundwater 4.3

5 LAND USE IMPACTS 5.1
5.1 Land Use 5.1
5.2 Traffic and Haul Routes 5.1
5.3 Stormwater/Erosion Control 5.1
5.4 Utilities 5.2
5.5 Landscaping 5.2
5.6 Fire Protection 5.2

6 ADDITIONAL ITEMS 6.1
6.1 Statement of Compliance 6.1
6.2 Host Community Fee 6.1
6.3 Compliance History 6.1
6.3.1 MPCA 6.1
6.3.2 County 6.2
6.3.3 City 6.2
6.4 Status of Other Permits and Approvals 6.2

LIST OF APPENDICES

APPENDIX A SOLID WASTE MANAGEMENT PLAN 1

APPENDIX B CON ANALYSIS 1

APPENDIX C PLAN SHEETS 1

APPENDIX D GEOTECHNICAL ANALYSIS AND COMMENTS 1

APPENDIX E STORMWATER MANAGEMENT MODEL AND CALCULATIONS 1

APPENDIX F CLOSURE, POST CLOSURE, AND CONTINGENCY ACTION PLAN COST ESTIMATES 1

APPENDIX G VIEWSHED MAPS AND 3D VIEW MODELING 1

1 Introduction

1.1 General Project Description

BFI Waste Systems of North America, LLC (BFI) respectfully submits to the City of Inver Grove Heights (City) an application for an airspace expansion and continued development of the Pine Bend Landfill (PBL) to be identified as Phase 7. This application was prepared based upon the applicable City requirements.

With this application, BFI is requesting amendments and approvals from the City for the following:

- Zoning Ordinance amendment
- Conditional Use Permit (CUP)
- Non-Conforming Use Certificate (NCUC) amendment
- Host Community Agreement amendment

1.2 City Approval Requirements

The Pine Bend Landfill is a mixed municipal solid waste (MSW) landfill, located in Inver Grove Heights, Minnesota, which has been in operation since 1971 under the Minnesota Pollution Control Agency (MPCA) Solid Waste Permit SW-45. The landfill is owned and operated by BFI Waste Systems of North America, Inc. (BFI).

BFI submitted an application for a major modification to the Minnesota Pollution Control Agency (MPCA) for Solid Waste Permit #SW-45 in June 2022. The request for a major modification detailed a proposed Phase 7 airspace capacity expansion over the existing landfill footprint by vertical expansion, extending the 3:1 cover slopes approximately 85 feet higher than the currently permitted Phase 5 and Phase 6 final cover grades. It is important to note that no horizontal footprint increase was proposed as part of the major modification request. This application to the City of Inver Grove Heights is the next step in the governmental approval process with an application to Dakota County to follow.

1.3 Project Benefits

The landfill is located in an area consistent with nearby industrial uses including a construction and demolition landfill as well as a large refinery. In addition, the project provides many environmental benefits including:

- Continued surface water control efficiency. The surface water management system has been designed to manage a 100-year, 24-hour MSE 24 hr. 3 storm event of 7.43 inches. The existing surface water management system is inspected and maintained by PBL.
- Efficient landfill gas collection and management. As part of the expansion, the existing gas collection system at the landfill will be expanded to capture landfill gas generated from the future waste to be placed. The landfill currently generates approximately 3,000 cfm of landfill gas which results in 2,140 dekatherms of Renewable Natural Gas (RNG) per day processed by the RNG plant located on-site and operated by Opal, a landfill gas developer. The RNG eliminates 43,900 metric tons of carbon and offsets emissions from more than 400 heavy-duty trucks every year.

The landfill and proposed expansion also provide many socio - economic and financial benefits to the City including:

- The landfill provides an important service to the community for the disposal of municipal solid waste generated. The landfill is host to an annual City-wide cleanup event. BFI is also a member of the River Heights Chamber of Commerce and donates to the B.E.S.T. Foundation.
- Property tax revenue. PBL currently pays $162,000.00 in property taxes. If the Recyclery and Hauling company, both of which are also located in Inver Grove Heights, are included this number increases to $419,000.00.
- Host fee revenue. In 2023, PBL contributed $2,303,000.00 host fees to the City.
- Local employment. Including the Landfill, Recyclery, and Hauling Company, approximately 145 people are employed by BFI.

2 Facility Information and Design

2.1 Ownership and History

As previously stated, BFI owns and operates the landfill. With regards to ownership history, MPCA permit SW-45 was originally issued to Pine Bend Development Company on September 7, 1971. Phoenix, Inc. operated the facility until 1976 when they purchased it. Browning Ferris Industries purchased the stock of Phoenix, Inc. on August 1, 1980 and Browning Ferris Industries then established Pine Bend Landfill, Inc. as a wholly owned subsidiary. Through additional mergers and acquisitions with Allied Waste in 1999 and Republic Services in 2008, the facility ownership has ultimately changed to its current status, BFI Waste Systems of North America, LLC a subsidiary of Republic Services, Inc.

BFI is ultimately responsible for all operations at the landfill, including the active gas management system and gas to energy plant. It should be noted that Opal Fuels, LLC (Opal) currently operates the active gas system at the landfill. Browning Ferris Gas Services, Inc. which was purchased by Gas Recovery Systems, Inc. previously operated the gas system.

A timeline for important historical environmental permitting, monitoring and response actions is provided as follows:

- ***April 23, 1985*** – The Proposer and the MPCA entered into a Response Order by Consent ("Order") under Section 17 and 18 of the Minnesota Environmental Response and Liability Act of 1983. Minn. Stat. ch. 115B. The Order required the Proposer to perform a Remedial Investigation and Feasibility Study to investigate the source or sources of groundwater contamination at and near the Facility; to assess actual and potential impacts of the releases or threatened releases of hazardous substances, pollutants and contaminants from the Facility on public health, welfare and the environment; and to identify, assess, design, develop and implement response action alternatives.
- ***October 23, 1990*** – The Proposer and the MPCA entered into an Amended Response Order by Consent ("Amended Order"). The scope of the Amended Order required the Proposer to redesign and complete the remedial investigation agreed to in the 1985 Order, conduct a feasibility study; develop a plan to provide an alternative drinking water source for certain residential wells adversely affected by the release(s) from the Facility and the neighboring Crosby American Demolition Landfill; and to develop a response action plan and implement the approved response actions.
- ***September 23, 1991*** – The MPCA approved the Updated Remedial Investigation Report for the Facility. In regard to the alternative drinking water source, the Proposer developed a plan and the MPCA issued a Record of Decision in September 1991, which required the residences with affected wells to connect to the city's water supply system. The city of Inver Grove Heights completed the connections supplying municipal water to the residences in December 1994.
- ***November 21, 1994*** – The MPCA approved No Action Alternatives under the Superfund process for the source control and the remediation of groundwater contamination as recommended in the Updated Detailed Remedial Analysis Report. The Minnesota solid waste management rules require more stringent levels for cleanup and remediation than the Superfund Program, therefore, the source control

and the remediation of groundwater contamination was previously and currently managed in accordance with this Permit.

- ***March 4, 2003*** – The MPCA granted the Proposer a CON capacity as part of the Phase 5 vertical expansion of the Facility. The CON capacity granted was six (6) million cy and brought the total Facility disposal capacity to 29,800,000 cy.
- ***July 2008 and November 2013 –*** The Proposer submitted Applications for Permit Renewal with a new SW-45 Permit being reissued.
- ***August 2015 –*** The Proposer submitted a Request for a Major Modification to Permit SW-45 for the Phase 6 Development.
- ***November 10, 2016*** – The MPCA issued an approved Findings of Fact and Order for a Negative Declaration on the Need for an Environmental Impact Statement (EIS) on the Environmental Assessment Worksheet (EAW) proposed for the proposed Pine Bend Landfill Phase 6 Development.
- ***October 25, 2016, March 6, 2017, and July 17 ,2017 –*** The proposer provided responses to City comments on the Major Modification Application submitted to the MPCA.
- ***June 2022 –*** The Proposer submitted a Request for a Major Modification to Permit SW-45 for the Phase 7 Development.
- ***August 2022 –*** Newly constructed Opal RNG facility is on-line and operational.
- ***March 1, 2024*** – The MPCA issued an approved Findings of Fact and Order for a Negative Declaration on the Need for an Environmental Impact Statement (EIS) on the Environmental Assessment Worksheet (EAW) proposed for the proposed Pine Bend Landfill Phase 7 Expansion.
- ***February 12, 2024, April 12, 2024, and April 29 ,2024 –*** The proposer provided responses to City comments on the Major Modification Application submitted to the MPCA.

The Permittee has constructed and the MPCA has approved the following major features Construction Summary:

Feature	Year Constructed
Methane Gas Extraction System	1995, 1996
Liner Base	
Phase 1	1987
Phase2	1988
Phase 3	1992
Phase 3B	1995

Feature	Year Constructed
Phase 4 Cell A	1999
Phase 4 Cell B	2001
Phase 5 Cell A	2005
Phase 5 Cell B	2006
Phase 5 Cell C	2009
Phase 5 Cell D	2010
Phase 5 Cell E	2013
Phase 5 Cell F-1	2018
Phase 5 Cell F-2	Future Construction
Phase 6 Cell C-1	2019
Phase 6 Cell C-2	2020
Phase 6 Cells D and B-1	2021
Phase 6 Cell B-2	2022
Phase 6 Cell A	2023
Final Cover of Unlined Fill Area	
Phase 1	1993
Phases 2 and 3	1995, 1996

Feature	Year Constructed
Phase 3 (SE corner)	2001
Phase 4 (lower portion of Phase 4)	2011
Liner Sidewall Extension	1995, 1996

2.2 Types of Waste Received

The Pine Bend Landfill accepted approximately 350,124 tons of solid waste in 2023. This includes the following:

- MSW
- Processing residuals
- Industrial waste including processing residual and alternative daily cover material. The July 2014 Solid Waste Management Plan was incorporated into the June 2022 MPCA Permit Application and is provided as Appendix A.

A yard waste compost facility located on the west 100 acres was closed in 2010 due to ash borer disease. The MPCA permit for this facility has been kept up to date.

2.3 Facility Users

At present, all materials at the Pine Bend Landfill are deposited by licensed haulers of municipal solid waste, demolition materials and approved industrial waste haulers, as well as the general public.

2.4 Waste Flow/Site Capacity/Phasing

For the purposes of cell phasing, an annual fill rate of approximately 600,000 cubic yards per year will be used. The 600,000 cubic yard annual fill rate is based upon approximately 420,000 tons per year received and assumes an in-place density of approximately 1,400 pounds per cubic yard, as well as PBL's knowledge and experience in the solid waste collection marketplace.

An addendum to the MPCA solid waste permit application was prepared in September 2022 to analyze remaining Certificate of Need (CON) consumption (see Appendix B). As of May 2022, PBL had 2,237,508 tons of remaining CON, with an estimated consumption rate of 400,000 tons per year of MSW. At that rate the CON PBL had remaining as of 2022 would be used by January 2028.

As of June 2024, PBL has 1,555,842 tons of remaining CON. At the estimated rate of 400,000 tons of MSW per year, PBL will run out of CON in May 2028. CON updates are included in PBL’s annual operating report each year.

PBL is currently filling in the Phase 6 area of the landfill. The Phase 4 development, which consists of Phases 4A, 4B, and 4C is approximately 36.8 acres in size, and was designed and permitted to allow for approximately 4 million cubic yards of capacity. Phase 5 is the vertical expansion over previously filled areas and is to be developed with a total of 6 cells designated Phase 5A through 5F of which Phases 5A through 5E have been constructed. As of January 2021, the remaining permitted/ultimate landfill capacity

is approximately 2,643,316 cubic yards (which includes final cover requirements). The Phase 6 major permit modification application requested an additional 4,137,400 cubic yards of airspace capacity for the Phase 6 development. The total permitted capacity of the site was increased from 29,800,000 cubic yards to 33,937,400 cubic yards (including final cover materials).

The Phase 7 development for which this major modification application is being submitted will allow for the vertical expansion of airspace capacity over the existing Facility footprint. No horizontal footprint increase is included as part of this proposed vertical expansion. The Project will increase the permitted design capacity by 8,185,800 cubic yards (cy), for a total capacity of 42,123,200 cy and extend the life of the Facility by approximately thirteen (13) years. Of the proposed increase in design capacity it is anticipated that approximately 7,888,250 cy will be operational volume, and approximately 297,550 cy will be final cover soils.

A summary of the design volumes as provided in the August 2015 Application for Major Modification submittal to the MPCA is provided in Table 2-1: Landfill Design Volumes. As shown, the landfill will be constructed and closed in phases.

Table 2-1: Landfill Design Volumes

Phase	Remaining Airspace (cy) (1)(2)	Estimated Final Cover (cy	Remaining Operational Airspace (cy)	Status	Site Life (year) (3)	Site Life (months)	Open Date
5F-2	826,300	37,682	788,618	Future - Permitted	1.4	16.5	Future
6	1,134,334	100,972	1,033,362	Constructed	1.9	22.7	2019-2023
7	8,185,800	297,550	7,888,250	Future – Vertical Expansion	13.6	163.7	Future
Total	**10,146,434**	**436,204**	**9,710,230**		**16.9**	**202.9**	

(1) Based on December 2023 drone survey completed by Firmatek.

(2) Includes Final Cover requirements.

(3) Based on Annual waste flow of 600,000 cubic yards.

2.5 Phase 7 Landfill Expansion Engineering Design

The Phase 7 design proposes to extend the currently permitted 3:1 final cover slopes around the perimeter of the landfill vertically. The design provides for increased capacity without increasing the landfill footprint. The 3:1 final cover slope design already in place on the west side of the landfill has been shown to be stable and efficient at surface water management. The proposed and current landfill design includes environmental controls that meet or exceed regulatory requirements for this type of facility. Plan sheets from the June 2022 Major Modification Application (updated in response to City comments) detailing the design for Phase 7 are provided in Appendix C. The 2022 Geotechnical Evalulation,

response to geotechnical comments raised by the City, and additional geotechnical evaluation are included in Appendix D.

2.6 Base Grades

2.6.1 DESIGN

Base grade is defined as the top of the liner surface. The base grades for the currently permitted MSW facility have been designed to maximize site life, and yet minimize environmental impacts. The grades range from 33 percent on the internal sideslopes (3 horizontal to 1 vertical) to a minimum of 3 percent on the base, with leachate flow being directed to collection sumps within each phase.

Phase 7 is a vertical expansion with no new base grades, the base grades for the existing Phase 6 cells were set by the current grade on the overfill areas at the time of construction, but were no less than 3 percent and no greater than 33%, the maximum allowed by MPCA Rules. Leachate from the Phase 7 waste will percolate to the Phase 6 base grades and will be collected by the existing Phase 6 leachate collection system.

2.7 Liner Design

The liner system for MSW disposal areas, according to MPCA solid waste rules, must be designed to have a minimum collection efficiency of 95 percent. In addition, the liner system in combination with the final cover must have a minimum collection efficiency of 98.5 percent.

The approved liner system designs for the existing and remaining landfill development vary for the different areas of the site depending upon the existing liner system in-place below the vertical expansion. The proposed liner designs are as follows:

1. The western fill area or what basically constitutes Phase 4 development has been constructed with a composite liner consisting of one 60-mil (0.060 inch) high density polyethylene (HDPE) liner, overlying a 2-foot compacted clay liner. The clay liner has a maximum permeability of $1x10^{-7}$ cm/sec,and was compacted to a minimum of 95 percent Standard Proctor Dry Density, with a moisture content 0 to 5 percent wet of optimum moisture content.
2. The Central Fill Area or the valley between Phases 1, 2, and 3 and Phase 4 development is generally on virgin ground and a composite liner is currently permitted for this area. The composite liner is the same design as presented above and what is currently being utilized in Phase 4, & Phases 5A through 5F-1, and is permitted for 5F-2.
3. The southeast fill area is the portion of Phase 3 landfill development which has received final cover with a 40-mil flexible membrane liner. The permitted liner design for overfill in this area is one 60- mil HDPE liner, overlying a geosynthetic clay liner (GCL).
4. The majority of the Phase 6 expansion area is over Phases 1 and 2 which were constructed without an engineered liner. The constructed liner in this area is one 60-mil HDPE liner, overlying a GCL and the existing 2-foot clay cap meeting base liner quality standards.

The HELP Model calculations for the above liner designs were prepared as part of the previous MPCA permit application process and verify that these liner designs have an efficiency approaching 100 percent, which is exceeding MPCA rule requirements.

Geotechnical calculations presented in Appendix D demonstrate that the liner system will not be adversely affected by settlement of the underlying waste due to the combined effects of biodegradation and physical creep. The post settlement grade on the slopes analyzed will be greater than or equal to 3%,

at the end of the site life and subsequent post closure care period, which is consistent with the previous HELP modeling predictions of leachate head buildup.

2.8 Leachate Collection System

2.8.1 INTRODUCTION

As mentioned above leachate from within the Phase 7 waste will be collected and managed by the existing Phase 6 leachate collection system. The leachate collection system for Phase 6 is designed to collect and convey leachate from the overfill area to one of 6 leachate collection sumps located around the perimeter of the landfill. The leachate collection sumps were created by excavating low points in the designated areas between the perimeter berm and the existing landfill to serve as containment for the Phase 6 cells. The containment berm was constructed so that the alignment creates a trench slope along the inside toe that directs leachate to the respective sumps. The trench area was then filled with coarse aggregate and a perforated leachate collection pipe directs leachate to the sumps. Each sump holds approximately 4,000 gallons of leachate.

Leachate collected in the sumps is then pumped via a submersible sideslope riser pump to the existing forcemain that encircles the perimeter of the landfill. Each sump incorporates a sideslope riser to eliminate penetration of the liner. Submersible pumps capable of pumping approximately 80 to 120 gpm of leachate were then installed at the bottom of each sideslope riser. The leachate pumps maintain less than 12-inches of head over the liner during regular operations. Leachate from the sumps will continue to be pumped to the leachate tanks through the existing double-wall, HDPE forcemain, which has been buried at a minimum 5-foot depth to prevent freezing.

Currently, the site is served by two above ground steel leachate storage tanks as follows:

- One 101,000-gallon tank in southern portion of site near office building;
- One 80,000-gallon tank in southern portion of site near office building.

From the storage tanks, tanker trucks transport the leachate to the MCES wastewater treatment plant in St. Paul. The storage tanks have provided adequate storage capacity in the past and are anticipated to serve the site's needs moving forward.

Historical leachate collection data is presented below.

Year	Leachate Collection Volumes (Gallons)
2017	7,848,040
2018	8,087,766
2019	9,235,088
2020	10,453,293
2021	9,188,290
2022	11,052,540

Based on the data, it is reasonable to estimate that the leachate generation will continue to be about 8 to 11 million gallons per year in upcoming years as PBL plans to final close portions of the landfill as soon as final grade is reached and open areas should remain approximately the same as current. The real variability is a function of seasonal precipitation and the amount of open landfill surface area, rather than total landfill area.

2.8.2 DRAINAGE LAYER SYSTEM

The HDPE liner is overlain by 12 inches of granular drainage layer material. In compliance with the MPCA Solid Waste Rules, the permeability of the drainage layer is specified to be $1x10^{-3}$ cm/sec, or greater. On all sideslopes steeper than 10 percent, a textured HDPE membrane was utilized to improve stability of the geomembrane/clay interface, geomembrane/drainage layer interface and the geomembrane/GCL interface.

The granular drainage layer collects leachate and provides drainage along the liner to the leachate collection trench. Coarse aggregate (5/8 inch to 1.5 inch) is embedded around the collection pipes to protect them from damage and provide increased flow performance. An intermediate filter aggregate overlies the coarse aggregate. The granular drainage layer also functions as a protective layer to prevent equipment from damaging the HDPE liner. The potential for the HDPE membrane to be punctured by a particle from the pipe bedding material was evaluated. These calculations were previously completed and updated to account for additional waste mass and weight, and the factor of safety from puncture by this mechanism (coarse aggregate) was shown to be 1.5.

2.8.3 COLLECTION PIPES

Construction of the leachate collection trench begins with the placement of a geotextile in the pipe trenches above the HDPE liner. A layer of coarse aggregate 3 inches thick was placed in the trench, and the pipe was placed and aligned. The remaining coarse aggregate was placed after the pipe was fully installed. Graded filter aggregate 12 inches thick was placed over the coarse aggregate to provide a filter from the overlying granular drainage layer. This filter helps stop migration of particles that might otherwise clog the collection pipe. The granular drainage layer material was then placed over the trench. Special care was taken to properly align the pipes, according to the invert elevations and locations. The perforations were oriented to be on bottom.

The collection pipes are 6-inch diameter, perforated, Standard Dimension Ratio (SDR) 11, HDPE pipe. Pipe strength calculations were previously completed for the Phase 5 vertical expansion and the pipe deflection due to maximum loading by waste was determined to be less than 5 percent. Failure due to buckling or wall crushing was also evaluated and safety factors were shown to be 11.6 and 6.8, respectively. The Phase 7 expansion area will not have any fill depths and maximum loading conditions in the vicinity of the collection pipes greater than those used in the above calculations.

2.8.4 LEACHATE SUMP, HEAD BUILD-UP, AND REMOVAL

As previously described, there is a significant amount of historical leachate collection data for this site. This historical data shows that, approximately 8 to 11 million gallons of leachate will likely be generated and collected per year while this site is in operation.

For the Phase 6 area, leachate sumps were created by the intersection of the proposed perimeter berm and the existing final cover. Approximately 4,000 gallons of leachate can be contained in the leachate sumps, which were designed to be 2 feet deep and assuming the porosity of coarse aggregate to be 0.4. During regular operations, leachate head is maintained at 12 inches or less over the sump area by setting

the start/stop limits of the leachate pump to reflect these elevations. The pumps will pump the leachate to one of the two existing leachate tanks via the existing forcemain.

Leachate can be controlled during initial filling of the vertical expansion area by limiting the active fill area and by diverting surface water, prior to contact with the waste, to the surface water downslope structures if possible or directly off the waste footprint.

2.8.5 LEACHATE LEAK DETECTION

With regards to a leak detection system (lysimeter) installed beneath the low point of the Phase 6 fill area, MPCA Solid Waste Rules part 7035.2815, subp. 9 states:

> *A. The owner or operator must install the detection system at the lowest elevation of the fill area and throughout the fill area, as necessary, to monitor leachate build-up and for use as a part of the collection system. The detection system must be capable of monitoring leachate build-up in the fill area and consist of collection lysimeters and standpipes capable of monitoring, detecting, and collecting leachate movement through the liner. The detection system must consist of materials compatible with the leachate. The commissioner may approve a detection system without collection lysimeters or standpipes provided the owner or operator shows either to be unnecessary based on the liner system, subsurface soil conditions, ground and surface water flow patterns, depth to ground water, and the amount of leachate generated. The detection system must be designed and constructed to monitor the effectiveness of the leachate storage area.*

For the Phase 6 development, which included an enhanced liner system in the sump areas (60 mil, GCL, 2 feet of clay), PBL conducted liner leak location testing following each phase of liner system construction in lieu of lysimeters. Historically, PBL sees little to no liquid and no detection of leachate indicator parameters in their current lysimeters. PBL is committing to providing enhanced design and construction activities for this overfill development; above and beyond what has been performed in the past for their liner system that is showing no indication of loss of integrity. PBL is aware that the MPCA has approved the elimination of lysimeters in other composite lined facilities. As noted above all leachate from the waste in Phase 7 will be collected using the existing leachate collection system in Phase 6.

2.8.6 DUAL EXTRACTION SYSTEM

The leachate extraction system at the Pine Bend Landfill (PBL) in Inver Grove Heights, Minnesota was installed in 2002 to collect leachate from the unlined portion of the landfill. Fifty (50) gas extraction wells were reconfigured to allow for dual use for landfill gas and leachate recovery. Because this portion is unlined, successful leachate extraction is vital in source control of the groundwater and in reducing leachate from the closed portion of the landfill mound. An evaluation of the system shows an overall reduction in leachate head levels from 2002 to the present during the time the system has been operational. The number of dual extraction wells has decreased due to extraction wells being removed from the system because of the Phase 5 and 6 expansions, as well as miscellaneous pump issues (silted in or unremovable from well). It should be noted that all dual extraction pumps have been temporarily removed as needed between 2019 and 2023 (for the Phase 6 expansion), allowing for active waste filling activities in the vicinity of those wells. The dual extraction system is being redesigned to use a pneumatic system for dual extraction activities.

The Grundfos SQE pumps installed in the dual extraction wells were equipped with an onboard electronic motor that records pump starts and stops, hours of operation, and speed of the pump along with a number of other operating features. The pump supplier for the site has indicated that the SQE pumps are the top-of-the-line pumps to be used in this application and are the only constant pressure pumps on the

market fully equipped with built-in electronic controls which allow for advanced computer-controlled performance and state of the art protection features including sophisticated diagnostics. This information is stored in the pump motor and collected via a CU300; a motor-controlled equipment monitors at each individual well. Each well is also equipped with a bubbler tube and reference port for liquid level measurements.

In the past, pumps have been pulled from the wells for general maintenance and cleaning and in some cases, the pumps are not able to be returned to their original position. To address this concern, as well as the potential to add additional wells to the dual extraction system, PBL installed four pumping stations prior to Cell 5C construction in 2010. Another pumping station was installed prior to Cell 6C-1 construction in 2019, and two more prior to Cell 6D construction in 2021. The pumping stations are constructed with 10-inch riser pipes rather than the 6 to 8-inch wells typically installed at landfills. This was done to more easily allow for the removal and reinstallation of pumps over time. PBL installed pumps in two of the pumping stations, PS-1 and PS-2 in October of 2013. The two pumping stations were electrically connected to node 1 and the forcemain was connected to the existing forcemain installed adjacent to PS-1. New electrical was run to pumping stations PS-1, PS-2 and PS-3 in 2020, and new pumps and appurtenances were installed in PS-2 and PS-3.

Due to the above experience, PBL committed to install six (6) additional pumping stations throughout the Phase 6 3:1 build-out area. A total of 11 pumping stations were planned to be installed, all of which have since been installed. The pumping stations are installed in the same manner as those in the Phase 5 overfill area and help maintain access for removing leachate from the old unlined Phase 1 and 2 fill areas at the site. The locations and construction details for the proposed pumping stations are provided in the Plan Drawings.

The bottom of waste is shown on the cross-sections and this information was used to determine the depth of the pumping stations. The locations were based on evaluating the pumping volumes from existing dual extraction wells in the area. The proposed pumping stations are located near areas where relatively higher volumes of leachate are currently being removed.

2.9 Final Cover

2.9.1 DESIGN OVERVIEW

The final cover is designed to contain or divert precipitation from filled areas of the site. The efficiency of the cover system is defined as the amount of precipitation that is rejected or contained in the cover system and must be at least 90 percent (Minnesota Rules Part 7035.2815 Subp. 6.D.(2)). The previously completed HELP model calculations show the cover system design efficiency to be approximately 100 percent.

One of the design features of the proposed expansion is to continue the 3:1 benched final cover slope vertically by increasing the permitted elevations. This design provides for increased capacity without increasing site footprint or elevation. In addition, the design has been shown to be stable and very efficient at surface water management. The MPCA guidance document for 3:1 final cover systems was utilized in completing the design for PBL.

As shown on the plan sheets, benched sideslope final cover system is constructed on all areas that are covered at a 3:1 slope. A benched system will be stable, efficient, and maintainable. The benches are 12 feet wide to incorporate access roads and surface water management. The benches are sloped at 12.5 to 16.6 percent into the sideslopes with a long axis grade of 3 to 5 percent. The final cover sideslopes will be 33 percent for a maximum length of 40 vertical feet and a flow distance of 120 feet. The majority of the

final cover will be at a three percent grade.

The final cover barrier layer will consist of a 40-mil LLDPE liner, or equivalent. For increased stability, all final cover slopes will utilize a textured liner material. A synthetic geonet drainage layer with geotextile bonded on both sides will overlie the liner. A cross-section of the final cover profile is described below.

The cover material will consist of 24 inches of cover soil and/or topsoil above the geosynthetics. The upper 6 inches will be topsoil capable of sustaining vegetation. The final cover topsoil layer will be mulched and seeded with shallow-rooted, drought-tolerant grasses.

A cross section of the final cover system is provided below.

- 6 inches Topsoil
- 18 inches Cover Soil
- Geonet geocomposite
- 40-mil LLDPE Geomembrane
- 6 inches Smoothing or Buffer Layer

Slopes on the final cover of the facility will be constructed at up to 33 percent grade. The final cover then peaks at a 3 percent grade at the top to a maximum proposed elevation of 1,105.8 feet (NGVD 29). The new peak elevation is 85.8 feet higher than the previous permitted peak elevation of 1,019 feet (NGVD 29).

2.9.2 FINAL COVER GRADES

2.9.2.1 Slope Stability

The stability of the landfill was evaluated for both a circular failure within the waste mass and for a block-slide type failure along the interfaces within the existing final cover system and the proposed base liner system.

Detailed explanation of the methodology and assumptions is presented in Appendix D and the results are summarized below.

Analysis	Factor of Safety
Overall System	1.81
Lower Liner	1.91

The global stability was re-analyzed in February 2024 with varying additional conditions such as considering the base liner system impenetrable and removing cohesion to be conservative. All analyses still showed appropriate factors of safety, meeting 1.5 or greater for long-term conditions and 1.2 or greater for short-term conditions.

Veneer Cover Stability

Benches will be incorporated at intervals of 40 vertical feet or 120 feet flow distance. The benches are 12 feet wide and are designed for use as access roads with surface water control on the inboard side. Benching provides for a buttressing effect at the toe for each 40 vertical feet of slope. This buttressing effect contributes greatly to the stability of the veneered cover system. Each bench will also serve as an anchor for the geosynthetic materials. This anchoring effect was neglected (conservative) in slope analysis. The final cover design includes the use of textured LLDPE geomembrane and a synthetic

geonet drainage layer. This combination of features greatly enhances removal of infiltrated surface water while providing a high friction angle and resulting stability in the final cover components.

Overlying the drainage media is a 24-inch layer of cover soils/topsoil. This layer, once vegetated, provides significant moisture holding and evapotranspiration capability, which also enhances overall final cover performance.

An analysis of the veneer stability of the final cover system was previously performed during the phase 5 expansion permitting and demonstrated that the stability of the final cover design will meet the design safety factor criteria of 1.5. The proposed final cover profile is consistent with what was proposed in that permitting document, so no additional analysis is warranted.

Final Cover Access

The proposed benches provide for more designed access than typically provided on landfill covers. The larger amount of final cover access results in better access to the final cover, surface water control features, and many of the landfill gas well heads for operation, maintenance, and inspection. Landfill gas wellheads are placed for easy access from the benches where possible.

2.9.3 SURFACE WATER MANAGEMENT

The surface water system has been designed to manage a 100-year, 24-hour MSE 24-hr 3 storm event of 7.43 inches. The system consists of benches, catch basins, drainage piping, downslope structures, junction vaults, diversion structures, and sedimentation ponds. The components of the surface water system are described below. The results of the stormwater model are included in Appendix E. Note that the surface water model results included in Appendix E, dated 5/24/2024, were updated per City comments (see Appendix D for comment response) from the prior surface water model results, dated 2/12/2024, to more accurately account for soil types, provide more conservative flow (i.e. shallow concentrated flow instead of sheet flow), correct a pipe size at Node 7P, and to more accurately reflect storage conditions of Node 9P. To prevent confusion of the model results only the more recently updated version is included, however the previous results are archived and available upon request.

2.9.3.1 Peak Run-off

HydroCAD 10.10 – 6a was the model used to determine the maximum discharge from the final cover system to each of the stormwater management ponds. Peak runoff was estimated using calculated runoff CN's for each subcatchment. Curve Numbers were calculated using the C soil group for both sloped and flat areas (the same cover soils would be used for both areas). The slope area composite was calculated by assigning 30% to the newly graded condition (CN 91) and 70% to a fair, 50%-70% grass cover condition (CN 79). Similarly, the flat area composite was calculated by assigning 30% to the newly graded condition (CN 86) and 70% to a fair, 50%-70% grass cover condition (CN 69). These percentages are representative of the proposed construction phasing since the entire final cover area will not be in the newly graded condition at the same time. The percent of each sub catchment in a sloped vs flat region was multiplied by the respective composite curve number to get the final CN for that sub catchment.

All subcatchments were renamed with the same letter on which pond its directed to and numbering down from top to bottom with odd numbers to the left of downslopes and even numbers to the right. Double letters used for area's not directly adjacent to the main downslope.

Atlas 14 Rainfall values for Dakota county were used in setting the storm events. Time of concentrations were calculated using sheet flow and shallow concentrated flow for the longest flow path for each subwatersheds. To be conservative in the analysis, no infiltration is modeled in swales or downslopes.

The 100-yr high water level was also set by modeling no infiltration in the swales and downslopes.

2.9.3.2 Bench and Drainage Swale Design

Benches are placed on all 3:1 slopes. They are sloped into final cover and V shaped with right and left side slopes 3:1 and 8:1, respectively. The benches are placed in order to intercept and direct flow, as well as minimize erosion. The drainage channel at the interior of the bench was designed with the following characteristics:

Height= 22” (typical)
Slope= 3% to 5% (typical)
Manning "n" value= 0.035

The drainage benches were designed to handle the 100yr flow for each subarea and are spaced 40’ vertically around the perimeter of the landfill. The peak flow depth will not exceed the depth of the bench. Benches will have category 4 erosion control matting installed to protect against erosion until vegetation is established.

2.9.3.3 Downslope Structures

Each bench discharges into one of seven cable concrete lined downslope structures located around the perimeter of the site. Each downslope structure is a trapezoidal channel with design characteristics summarized below:

Depth = 2.0’ (typical)
Bottom width = 9 feet
Manning "n" value= 0.040

Runoff is contained during the 100-year rainfall event.

2.9.3.4 Junction Vaults

The downslope piping systems in the southwest and northeast corners of the currently permitted design discharge to concrete junction vaults. In the junction vaults, flow is combined to a single pipe that outlets to the existing railroad crossing culverts, a 48-inch RCP on the southwest and a 96-inch RCP on the northwest.

2.9.3.5 Sedimentation Ponds

Surface water from the proposed vertical expansion final cover area is also directed to existing sedimentation ponds.

<u>Routing</u>
Discharge to the southwest pond (8P) is directed from the downslope through an existing concrete diversion structure to a 48” pipe which discharges to the final outfall.

Discharge to the existing east pond (6P) is directed through an existing low area into a set of culverts beneath the railroad tracks prior to final outfall. There is currently one 36-inch culvert in place beneath the tracks. To accommodate additional stormwater flows per the design, two additional 36-inch culverts will be installed in this area. It should be noted that this will require installation by horizontal drilling methods due to the adjacent railroad tracks.

Discharge to the northeast pond (4P) is directed through existing low areas directly into the pond.

Discharge to the northwest pond (3P) is directed though existing low areas to a 60' downslope into the final outfall.

Discharge to the west pond (1P) is directed through an existing concrete diversion structure to a 60" pipe, to an existing 96" pipe which discharges to the final outfall.

Infiltration
By City requirement all ponds must be able to infiltrate 1" runoff over new impervious surfaces. No new impervious surfaces are created as part of this expansion.

Inspection and Cleaning
The sedimentation basins, as well as the drainageways and culverts, are inspected monthly to determine if cleaning is required. Below is a table of sedimentation levels that shows how much sediment would need to build up across the bottom of the basin to impact the ability to manage a 100-year, 24-hour storm without overflow.

Pond	Pond Overflow Elevation	Pond Bottom Elevation	Sediment Elevation Impacting 100-Yr Storm Management	Cleaning Action Elevation
1P (West Pond)	859	843	856	854
3P (Northwest Pond)	876	858	871	869
4P (Northeast Pond)	900	878	894	892
6P (East Pond)	896	882	892	890
8P (Southwest Pond)	846	837	841.5	839.5

2.10 Landfill Gas Management

2.10.1 BACKGROUND

The EPA and MPCA require that landfill gas (LFG) generated at MSW landfills be controlled. This control requirement is to achieve two objectives. First, the methane component of LFG is combustible in the concentration range of 5 to 15 percent by volume in air. Five percent is considered the lower explosive limit or LEL and 15 percent is considered the upper explosive limit or UEL. Consequently, migration and concentration of methane into enclosed spaces could result in an explosive atmosphere. Therefore, Minnesota Rule 7035.2815 Subp. II requires that the concentration of any explosive gas not exceed the LEL at the property boundary or 25 percent of the LEL in or around facility structures. PBL has an MPCA-approved
gas collection and monitoring system to address concerns with migration of combustible gas.

The second objective in controlling LFG is for maintenance of air quality standards. In March of 1996, the EPA promulgated air emissions regulations for large new and existing MSW landfills. These are the New Source Performance Standards and Emission Guidelines (NSPS). Under these regulations, affected facilities that emit more than 50 megagrams per year (Mg/yr) of non-methane organic compounds (NMOC) must install controls. The installed controls must be capable of reducing the NMOC in the

collected LFG by at least 98 percent by weight. PBL has been proactive in the installation of landfill gas control equipment.

PBL employs a comprehensive monitoring program for early detection of landfill gas (LFG) in on-site structures and at adjacent properties, as well as gas collection and a landfill gas to energy plant. Occupied buildings and structures located at the facility are continuously monitored using electronic monitoring devices. These devices allow for detection of concentrations of LFG well below the concentrations at which the gas reaches an explosive range.

Landfill gas migration from the landfill is monitored with permanent landfill gas monitoring probes around the perimeter of the facility. There have been readings at the probes at concentrations above the LEL, suggesting subsurface gas migration. Mitigation and analysis efforts include multiple geoprobe investigations, installation of passive gas vents, installation of wind turbines on the passive gas vents, radon fan installation on gas vents, and a skid blower pilot study to apply more vacuum to the vents.

2.10.2 GAS PROBE MANAGEMENT

As stated above, PBL employs a comprehensive monitoring program for early detection of landfill gas (LFG) in on-site structures and at adjacent properties, as well as gas collection and a landfill gas to energy plant. Minnesota Rule 7035.2815 Subp.11 also requires that occupied buildings and structures located at the facility are continuously monitored using electronic monitoring devices. These devices allow for detection of concentrations of LFG well below the concentrations at which the gas reaches an explosive range. Landfill gas migration from the landfill is monitored with permanent landfill gas monitoring probes around the perimeter of the facility. These probes are monitored in accordance with the Gas Management and Monitoring Plan which is included in the Facility Operations and Maintenance Plan.

2.10.3 GAS MIGRATION MITIGATION

Currently, PBL has been actively working with the MPCA and the City of Inver Grove Heights to address gas migration concerns. A Gas Migration Remedial Action Report, dated February 2024, was most recently submitted under separate cover to the MPCA, City of Inver Grove Heights and Dakota County as part of the 2023 Annual Report.

In 2023, methane readings continued to linger above 25% LEL in monitoring probes MMP-14 and -16 along the northern perimeter of the landfill, however methane concentrations displayed a decreasing trend in the second half of the year. The remainder of the monitoring probes along the northern perimeter continue to follow the historical trend below 25% LEL (MMP-11, -12A, -12B, -12C, -12D, -15). Along the eastern perimeter of the landfill, methane concentrations varied above and below 25% LEL among the soil gas monitoring probes. MMP-17, -18A, -18B, -21, -22A, -22B and -22C all had readings exceeding 100% methane LEL at some point during the year. The majority of these probes also show an overall decreasing trend in the second half of the year. MMP-18 is comprised of a triplet cluster where are A, B, and C correspond to shallow, intermediate, and deep screened sections, respectively. At this location, methane concentrations were most frequently elevated at MMP-18B and MMP-18A. MMP-18C did not exceed 25% LEL. Along the western perimeter, methane was below 25% methane LEL at MMP-10, GMP-3, and GMP-4. However, methane was frequently detected at concentrations above 100% LEL at GMP-5 and MMP-25B along the western perimeter. MMP-25B was replaced with MMP-25C at the perimeter of the landfill in 2023, and it should be noted that MMP-25C has not had any concentrations detected above 25% LEL. MMP-23 and -24 consist of triplet clusters that monitor methane migration to the south. Methane was also consistently measured above 100% LEL at MMP-24 during 2023, with decreasing trends late in the year. It should be noted that in the last three (3) calendar months of 2023 a

total of 59 readings were collected with a total of seven (7) exceedances of the LEL in four (4) probes, with no exceedances in the other 36 probes.

As described in a memorandum dated June 6, 2022, radon fans were installed on passive gas vents GV-1 through GV-5 in lieu of a temporary active gas collection system when it was determined that the fans could potentially provide an equal or better flow and vacuum on the vent with less construction effort compared to providing a conventional active LFG extraction system (blower system). The fans on vents near MMP-17 (GV-1 through GV-5) were installed in April 2022 and were powered by a nearby electrical panel for the fans to run continuously. Fans were later installed on GV-6 through -11 in July 2022. Ten passive gas vents, identified as GV-12 through GV-21, were installed in a separate construction event in July 2022 between various gas probes and the waste mass with the intent to vent potentially migrating LFG to the atmosphere. GV-12 and -13 were installed near MMP-17D, GV-14 through -16 were installed near MMP-18A, B, and C, GV-17 and -18 were installed near MMP-19, and GV-19 through -21 were installed near MMP-23A, B, and C. In December 2023 two additional vents were installed near GMP-55. See Figures 2 through 4 for the locations of all existing passive gas vents. Each new vent was installed with the same radon fans, initially running on generator power. Permanent electrical power was installed to radon fans near MMP-22, -23 and -24 in September 2023 as part of the Phase 6A construction project. PBL would like to install permanent electrical power at the rest of the fans that are still on generator power in 2024. They are also currently evaluating solar power as an option at the two newest vents.

A Rotron EN454 regenerative blower mounted on a skid was temporarily installed near MMP-17, and three (3) two-inch PVC pipes were connected to gas vents GV-1 through GV-5, the vents between MMP-17 and the waste mass. One pipe is connected to GV-1, the next is connected to GV-2 and GV-3, and the third is connected to GV-4 and GV-5. Each of the three inlets has a control valve to tune the flow as needed, and each of the three has a vacuum of approximately 30-50 inches. The blower is powered via an adjacent control panel that the skid panel is directly wired to, and it has an internal knockout tank with a valve to release any collected condensate. Since methane concentrations have greatly reduced at MMP-17 since the installation of the temporary blower system, PBL intends to continue running the blower for the foreseeable future.

Long-term effects of the installation of additional passive gas vents, radon fans and temporary blower system are not yet apparent but in the short term it appears methane concentrations are decreasing at probes that have nearby vents. The effects of the vents, radon fans and the temporary blower system will continue to be monitored for trends.

At this time, PBL is proposing to connect radon fans currently running on temporary power to a permanent power source for more continuous operation of the existing fans. Opal has also committed to more tuning of wells in the area now that overliner has been installed over much of the unlined area and the risk of oxygen intrusion in those wells is less. This could continue to reduce gas migration potential in the vicinity of the probes.

The proposed schedule for work items related to gas migration in 2024 included the following:

	Task to be Completed		**Anticipated Completion Date**
1.	Establish permanent electrical power to installed radon fans that are currently on temporary power.		Summer 2024

2.	Continue to evaluate temporary blower system impact to probe readings at MMP-17.		Ongoing
3.	Continue monitoring gas probe and gas vent methane concentrations to track impact of the installation of radon fans and the temporary blower system. Continue to evaluate additional gas mitigation alternatives.		Ongoing
4.	Continue to optimize tuning of gas wells near the perimeter of the landfill.		Ongoing
5.	Monthly visual inspection of cover for distressed vegetation near EW-320 and EW-10.		Ongoing
6.	Submit 2024 Annual Gas Migration Remedial Action report to MPCA, City, and County including a summary of work performed, and an evaluation of data, and recommendation for additional remedial measures.		Winter of 2024/2025

An updated Gas Migration Remedial Action Report is anticipated to be included in the facility's Annual Operating Report by March 1, 2025. The updated report will detail progress on proposed remedial action items and propose continued remedial action items for 2025.

2.10.4 FUTURE GAS SYSTEM INSTALLATION

The Pine Bend Landfill gas extraction system is currently being augmented in the Phase 6 area to include a horizontal gas collector system as well as the installation of six (6) new pumping stations. Although the pumping station's primary purpose is to remove leachate from the unlined landfill area, they may also be retrofitted to serve as dual extraction wells and also provide for landfill gas collection. Lateral subheader piping (8-inch HDPE) are connected to the existing header piping system to provide vacuum to the new horizontal gas collection system. Horizontal collector piping (6-inch HDPE) is installed as shown on the Drawings. The proposed system has been designed to provide effective control of landfill gases in the Phase 6 expansion, and vertical expansion areas upon completion of filling. Horizontal collectors are identified as HC-1. All new wells/horizontal collectors are given an identification number when installed. The system is installed in phases as filling progresses with the use of temporary controls to keep the existing system active during the construction of the proposed vertical expansion.

In addition, new vertical gas extraction wells are proposed to be installed in the Phase 7 vertical expansion area once final waste grades are reached. A plan for the vertical gas wells is shown on Plan Sheets No. 8 and 9.

2.10.5 EXISTING EXTRACTION WELLS

The existing gas wells are extended as filling progresses during Phase 6 development and vertical expansion. This means that periodically the well head assembly will require repositioning as development

dictates. This may include remotely locating the wellhead away from the filling area. It is also possible that certain wells may be extended, but temporarily taken out of service. The existing gas wells in areas where overfilling occurs are extended vertically by fusing piping to the existing well pipe and also to the subheader connection to maintain the wellheads at 48 inches above the landfill surface during operations. The existing wellhead assembly are removed prior to fusing the well and subheader extensions and are reinstalled after the extension is made. A bentonite mixture is used to seal the annular space between the outer pipe and well casing, if applicable.

It is anticipated that gas well extension process will take approximately two (2) hours per well to complete. The existing gas system is set up such that individual gas wells can be isolated from the active gas system by valves. Therefore, the entire active gas system does not need to be shut down during the extension process. Only a portion of the system is isolated as a preventive measure against excessive oxygen intrusion during the extension work.

2.10.6 HORIZONTAL COLLECTORS

As previously discussed, horizontal collectors are currently planned to be installed in the areas of the Phase 6 expansion where the overfill waste thickness will be too shallow for practical installation of vertical extraction wells. The horizontal collectors will consist of 6-inch HDPE piping and the proposed layout is shown on the Drawings. Coarse aggregate is installed below, above, and on each side of the perforated horizontal collector piping and geotextile is placed over the coarse aggregate. The solid piping portion of the collectors is covered with sand. Condensate from the horizontal gas collection piping drain to existing condensate pumps. The minimum pipe slope will be 3% to promote condensate drainage. Each horizontal gas collector is connected to the gas lateral subheader piping via a wellhead. Valves to regulate vacuum and gas flow are installed. A detail is provided on the Drawings.

3 Operations

3.1 General Operations and Site Security

A bound copy of a recently updated operations and maintenance plan along with the latest site evaluation reports as amended and approved and a complete set of plans will be kept in the operations office at the landfill for reference. A certified operator will be present to observe proper operation and monitoring of the facility.

The site will be maintained to provide a safe operating environment. The perimeter fencing and entrance gate will be maintained to provide security for the facility and discourage unauthorized access. The operator will lock the gates at the end of each working day and maintain the security systems on the facility buildings.

3.2 Hours of Operation

Normal operating hours for the facility are from 5:30 a.m. to 6:00 p.m. Monday through Friday, with waste received from 6:00 a.m. to 4:00 p.m, and placement of daily cover until 6:00 p.m. Saturday operations may occur during the same weekly hours listed above, but Saturday operations are not a regular occurrence. A certified operator is on-site during the normal operating hours and during extended hours when waste is being delivered. Outside of normal operating hours, all site hours will be in accordance with the NCUC, and if any change in hours are needed in the future the City will be notified.

3.3 Employees

As of 2024, the facility has three (3) MPCA-certified operators, allowing one certified operator to be present at the facility during all hours of site operation. New site personnel who will be charged with operating responsibilities generally receive formal training within the first six months of employment. All employee-training records are maintained at the facility office. Facility operators are encouraged to update their training on a biannual basis, or as necessary, to maintain MPCA certification.

The facility strives to maintain a safe work environment for the employees and customers. The Pine Bend Landfill has a mandatory safety and/or training program. Typical on-site training includes the following topics:

- Personal Protective Equipment
- Electrical Safety
- BFI Special Waste/Hazardous Waste Identification
- Random Inspection Program
- Working Face Safety
- Waste Screening/Evaluation
- Lock-out/Tag-out Program
- Hazard Communication
- Fire Extinguisher Training - Fire Prevention
- Drug and Alcohol Policy
- Storm Water Pollution Prevention Program
- Unacceptable Waste Procedures

- Exempt Industrial Waste Identification
- Bloodborne Pathogen
- Seat Belt Policy
- Safe Lifting/Back Safety
- Eye Protection
- Storm Water Management Plan
- Respirator Program/Fit Testing
- Hearing Conservation
- Winter Safety Slips-Trips-Falls
- Confined Space Entry
- Compaction Techniques
- Railroad Crossing Safety
- Heat Stress

The meetings are held monthly, or more often, to review and update current operating procedures.

3.4 Equipment

The following equipment is available on-site and is adequate for daily landfill operations.

- Two 836H landfill compactors
- 836K landfill compactor
- D-8T dozer
- D-6T dozer
- D-6R dozer
- Two 740B Haul Trucks
- Motor Grader
- Wheel loader 930
- Skid Steer
- Farm Tractor with mower deck
- Water Truck

This equipment list may change at any time depending upon updated technology and the requirements of the site. All equipment is maintained on a routine basis. Equipment maintenance records are kept on-site at the landfill.

Facility equipment is adequately maintained to ensure safe operation and the ability to handle the waste as they are received. Each piece of equipment has its own maintenance schedule, depending on its level of usage. General maintenance operations are performed at the site. In-depth maintenance and repair is performed in the facility equipment building. Maintenance manuals for all equipment at the site are kept in a file in the equipment building.

A daily maintenance program includes removing waste from radiators and checking for worn cooling system hoses and fan belts, checking hydraulic systems for worn hoses and fluid leaks, checking for fuel leaks, worn tracks or tires, etc.

Prior to operating the equipment at the beginning of each day, all water, hydraulic fluid, oil, and fuel levels are checked. An inspection of the area around the equipment is made to ensure the area is clear. The backup warning system is checked before leaving the startup area.

While equipment is operating, the machine is checked periodically for hanging or attached debris. The fuel and hydraulic systems are checked for leaks. Waste is handled in a manner, which protects the operator, as well as those at the working face.

At shutdown, the engine is allowed to cool evenly prior to shutting off. A 3-to-5 minute idle period is typical. All blades and other moveable parts are lowered to the ground, and the brakes and transmission locks set.

Records are kept of all maintenance work performed on the facility equipment. These records are kept with the equipment manuals in the maintenance building.

3.5 Processing

There is no processing or open storage of MSW at the Pine Bend Landfill. However, Pine Bend Landfill does provide appliance recycling, electronics recovery, and household hazardous waste removal.

3.6 Post-Closure, Contingency Action Plan and Financial Assurances

Refer to the attached Appendix F for the modified closure, post-closure, and contingency action cost estimates. These cost estimates have been modified based upon comments received from the City in review of the MPCA permit application.

3.7 Total Facility Operating Permit

The landfill is governed by a Total Facility Operating Permit (SW-45) through the MPCA with a Part 70 Air Permit Facility ID No. 037000138.

4 Potential Environmental Impacts

4.1 Leachate

The leachate generated from the proposed Phase 7 expansion will be collected and conveyed from the composite liner to collection sumps in the Phase 6 area. Leachate is removed from the sumps by pumps capable of handling the expected leachate quantities and treated off-site at the MCES St. Paul (Pigs Eye) wastewater treatment facility, which stipulates its own leachate monitoring requirements with which PBL must comply.

4.2 Methane

The owner and operator of PBL, BFI Waste Systems of North America, LLC (BFI), operates an active gas collection and monitoring system at the site. The monitoring system consists of gas probes around the perimeter of the site. Per MPCA requirements, all facility gas probes are monitored; Minnesota Rule 7035.2815 Supb. 11 requires that the concentration of any explosive gas not exceed the lower explosive limit (LEL) of five percent methane at the property boundary or 25 percent of the LEL (1.25 percent methane) in or around facility structures. The gas probes that have historically shown exceedances of the LEL are monitored monthly, while other probes are monitored quarterly. Gas probe measurements are acquired using a landfill gas monitoring device and are performed by Opal, the gas developer for the landfill.

PBL employs a comprehensive monitoring program for early detection of landfill gas (LFG) in on-site structures and at adjacent properties, as well as an active gas collection and a landfill gas to energy plant. Minnesota Rule 7035.2815 Subp.11 also requires that occupied buildings and structures located at the facility are continuously monitored using electronic monitoring devices. These devices allow for detection of LFG concentrations well below the LEL. Landfill gas migration from the landfill is monitored with permanent landfill gas monitoring probes around the perimeter of the facility. Gas level readings at the gas probes on the east, south, and west sides of the PBL have historically indicated LFG concentrations above the LEL. As part of on-going landfill operations and to address comments from the MPCA and the City of Inver Grove Heights, PBL has performed various gas probe investigations to help identify the off-site migration of methane around the perimeter of the site; PBL has been actively working to address gas migration issues. The most recent investigations and actions completed at the site were provided under separate cover in a Gas Migration Remedial Action Report dated February 2024.

4.3 Noise

Noise control is handled on-site by limiting hours of operation and by providing acceptable muffler systems on the vehicle traffic. The following information regarding noise is as follows:

4.3.1 LANDFILL EQUIPMENT/MACHINERY RELATED TO WASTE DISPOSAL

Noise presently generated at the site is the result of equipment used for hauling, compacting, and covering the refuse. The following machines or vehicles are operated at the site:

4.3.1.1 Landfill Machinery

Decibel (dBA) Range		Hrs/ week
Dozer	80-115	36hrs/week
Compactor 1	82-92	72hrs/week
Compactor 2	82-92	14hrs/week
Soil hauling truck	85-95	42hrs/week
Backhoe	73-80	42hrs/week

4.3.1.2 Haul Trucks

Refuse trucks hauling refuse to the site generate other noise. Approximately 160 refuse hauling trucks enter the site every day. 80 percent of these trucks are semi-trailer trucks and 20 percent are dump trucks. Such trucks are likely to generate from 85 to 95 dBA at the truck according to data furnished by the Hennepin County Department of Public Works. Traffic from these haul trucks take place from Highway 52 onto 117th Street into the south entrance of the site. All land within this reach of 117th Street is zoned industrial and no private homes or residences are presently in that area.

4.3.1.3 Nearby Sensitive Receptors

The closest resident is approximately 2,100 feet west of the landfill (east side of Rich Valley Blvd.) and 1,500 feet from the stockpile or borrow area located within the 100-acre adjacent site. This home is owned by BFI and rented out to a local resident. Topography presents a buffer between the work areas and private dwellings.

4.3.1.4 Operating Hours

Waste is received at the landfill between 6AM and 8PM, Monday through Friday, and 6AM to 4PM on Saturdays. No heavy equipment operates outside of these times unless opened on Sunday for special circumstances.

4.3.2 LANDFILL EQUIPMENT/MACHINERY RELATED TO CONSTRUCTION

The proposed expansion will not alter the existing noise generation typical of a construction project. Since Phase 7 is a vertical expansion no new cells will be constructed, and construction will typically consist of final cover or gas infrastructure construction projects.

4.4 Litter, Vectors, and Odor

Unloading of all wastes will be confined to as small an area as practical, and surrounded with appropriate facilities to confine wind-blown material within the area. The litter is picked up daily as generated.

During periods of windy weather, the operators employ an appropriate variety of tactics to prevent littering. These tactics are described as follows:

- Maintain disposal area in well-screened areas.

- Place the waste at the lowest level of the fill area possible.
- Apply liberal quantities of cover soil as the cell is filled.
- Reject waste that is highly susceptible to becoming windblown.
- Police the site fences and tree lines and return all litter to the working face.

In certain extreme conditions, operations will cease. The decision for operations to cease is made at the discretion of the facility manager. Historically, the site has closed and ceased accepting waste for disposal on days of high winds that prohibit landfill personnel from controlling litter within the boundaries of the site.

Vector control is achieved through the use of daily, intermediate, and final cover. Highly putrescible wastes are covered immediately upon placement at the working face. PBL also has a contract with Plunkett's Pest Control Company to provide inspection of the buildings on a monthly basis. Plunkett's Pest Control also completes a site walkover to identify rodent harborage and baits any active areas to eliminate problems.

Odors at the site are currently controlled by the operation of the active gas extraction system. The proposed expansion will not alter the existing odor conditions or generation at the site.

4.5 Fugitive Dust

Fugitive dust control during landfilling operations of the expansion will be controlled as is currently being done with the following landfill practices:

- The approach road to the landfill, 117th Street, is paved.
- The main on-site road to the active fill area is partially paved.
- An on-site water tank truck applies water to areas subjected to dust creation.
- If dust becomes a problem, sand is spread on the unpaved roads to control dust.

4.6 Site Geology and Groundwater

Site geology and hydrogeology has been extensively evaluated since the facility began operations in 1971. A groundwater monitoring network has been in-place since 1972 and more than 35 years of groundwater monitoring data has been collected.

The 2023 Annual Water Quality and Natural Attenuation Monitoring Report prepared by Groundwater and Environmental Services, Inc. (GES) represents the most recent compilation of site hydrogeologic information available. The above 2021 Annual Report should be referred to for a more detailed discussion. A brief overview of the site hydrogeology is presented below.

The uppermost aquifer underneath the site consists of the glacial deposits that are hydraulically connected to the Prairie du Chien Group and the Jordan bedrock formations. In the bedrock valley, the glacial deposits are also hydraulically connected with the Franconia Formation. Prairie du Chien and Jordan collectively comprise the major aquifer in the Twin Cities metropolitan area. The Franconia Formation can provide small amounts of water, but is usually considered to be, along with the St. Lawrence Formation, a confining unit (Schoenberg, 1990). The Ironton and Galesville Sandstones serve as a regional aquifer above the Eau Claire formation, which acts as a major aquitard. The deepest aquifer in the area is generally considered to be the Mt. Simon Sandstone.

An extensive monitoring well network is used for water-level measurements and water-quality sampling at PBL. The water table in glacial deposits is encountered between 725 to 800 feet (NGVD 29). Groundwater flow direction is to the northeast with the northeast flow becoming more easterly as it approaches the bedrock valley along the northern boundary of PBL.

The average horizontal hydraulic gradient in the uppermost aquifer has been calculated to be 0.010 feet per feet. Historically, the gradient has been steeper along the eastern boundary of PBL. Adjacent to and east of PBL, the hydraulic gradient becomes more gradual until about U.S. Highway 52/Minnesota Highway 55 where the hydraulic gradient increases once again due to the proximity of the Mississippi River Valley.

There are no changes being proposed as part of the Phase 7 development relating to the groundwater monitoring system at the landfill.

The Project will not appropriate or consume groundwater and therefore not contribute to groundwater supply issues in the area. The Facility has an existing groundwater monitoring network in place and would continue to monitor groundwater quality. The groundwater monitoring network and program would ensure early detection of groundwater quality impacts. If the Proposer observes groundwater quality impacts during monitoring, they will work with the MPCA to develop appropriate actions to address and improve groundwater quality under the terms of their solid waste permit. The Proposer would secure all required permits prior to implementing actions targeted at improving groundwater quality.

Additionally, the proposed vertical expansion will include appropriate leachate collection and management within the landfill. These practices will minimize the potential for groundwater contamination. The existing groundwater monitoring network and sampling program will detect if leachate or other landfill constituents have entered the groundwater prior to reaching sensitive waterbodies such as the Mississippi River.

5 Land Use Impacts

5.1 Land Use

The site is situated in a zoned industrial area with largely industrial neighbors; Koch Refining Company, Excel Energy, Inc., Mid-America Pipeline Company, Rich Valley (SKB Demo Landfill), etc. In addition, the closed Crosby American Demolition Landfill is located immediately north of the Pine Bend Landfill. Since the landfill has seemingly operated compatibly with neighboring sites and nearby land uses, this is not anticipated to change as a result of the proposed expansion. There are no anticipated conflicts involving environmental matters associated with the proposed expansion.

The Inver Grove Heights zoning ordinance allows for the airspace expansion of current landfills (10-13E-6) as a conditional use. Therefore, the Project is allowable on the site with a CUP. The Facility currently operates under an existing CUP and a NCUC from the City of Inver Grove Heights. The Facility also operates under a Solid Waste Facility License from Dakota County. The Proposer will need to amend their existing CUP, NCUC and Dakota County Solid Waste License for the Project.

The Project would not change the nature of the Facility. The Project will not expand the footprint of the Facility and it would continue to operation as a municipal waste landfill. Existing conditions associated with traffic, noise, dust, odor, and other issues related to Facility operations would continue, but would not change from current operations.

5.2 Traffic and Haul Routes

No construction of new cells is required for the vertical expansion of Phase 7. Existing landfill traffic, such as enclosed semi-trailers and garbage trucks would continue to be used for hauling MSW into the site. It should be noted that Dakota County is planning an expansion of the existing 117th Street used for access to the landfill. This may result in adjusted traffic or haul routes during road construction.

5.3 Stormwater/Erosion Control

No adverse impacts to the receiving waters from the site's surface water runoff are anticipated. There are no immediate receiving waters at or near the landfill. Surface water discharges are, and will continue to be directed to existing sedimentation ponds. The proposed expansion is not anticipated to increase the surface run-off volume, all of which is directed to the two existing sedimentation ponds. The storm water control facilities at the landfill have been conservatively designed to handle the 100-year, 24-hour storm event of 7.43 inches.

Erosion control on the landfill cover will be controlled by the installation of benches and permanent turf reinforcement mat that will intercept the run-off and direct it to downslope piping systems. Vegetation will be established as soon as possible on the intermediate and final covered areas of the landfill.

The proposal incorporates structural and/or non-structural control measures to reduce pollutants in storm water from soil erosion. The structural control measures include the following:

- Benches
- Downslope piping system
- Junction vaults
- Sedimentation ponds

- Curbs, berms, and earthen dikes
- Velocity dissipation devices
- Rock outlet protection
- Silt fencing
- Straw bale dikes
- Subsurface drains

The non-structural control measures include the following:

- Best management practices (spill prevention, neat and orderly material storage)
- The Spill & Emergency Response Plan
- Security
- Routine visual inspections

5.4 Utilities

The proposed Phase 7 development will require minimal revisions to the utilities at the site. Some utilities will be removed in the final development of Phase 5 (in the vicinity of the existing office building).

5.5 Landscaping

The Pine Bend Landfill has already constructed a network of landscaping berms and uses as much of the natural tree barriers as possible for screening around their current facility. Since the proposed expansion does not increase the boundaries of the current landfilling operations, the existing landscaping is considered adequate. Viewshed maps and 3D modeling of views of the existing landfill and proposed maximum elevation of the expansion are included in Appendix G. The viewshed maps were developed and evaluated using lidar data for Dakota County. The first figure shows the areas the existing landfill is visible from, the second shows the areas the landfill at proposed final grades would be visible from, and the third figure overlays both layers for comparison. Note that some areas shown as visible or not visible may be impacted by nearby trees and buildings. Some areas shown as visible may be visible from the top of a tree or structure rather than at ground level. The 3D modeling of projected views from various points in the City of Inver Grove Heights are also included, comparing current view of the existing landfill to expected view of the proposed expanded landfill at final grades. Industrial properties surround the Facility with limited visibility from residential or scenic areas.

5.6 Fire Protection

Arrangements and coordination with the City of Inver Grove Heights police and fire services is a condition of Pine Bend Landfill's NCUC with the City. The fire department has keys for the landfill gate.

Fire extinguishers are located on all large earth moving and waste handling equipment. They are also available in the shop and office. The vendor checks them annually. Testing verification is maintained with the facility records. The landfill has a water truck, normally used for dust control that can be used for fires. It can draw water from a water supply tank or a surface water source.

6 Additional Items

6.1 Statement of Compliance

Pine Bend Landfill's groundwater monitoring system, leachate recirculation, solid waste composting, and surface water management will take place in accordance with the MPCA solid waste permit application including subsequent modifications based on the responses to City review recommendations.

6.2 Host Community Fee

The City and Pine Bend Landfill are in negotiation for a renewal of the Host Community Agreement, which will include provisions for the proposed expansion.

Pine Bend Landfill has also entered into a new Host Fee Agreement with Dakota County on January 1, 2023. The term of the new Dakota County Host Agreement runs through December 31, 2037.

6.3 Compliance History

6.3.1 MPCA

6.3.1.1 Groundwater Contamination

BFI implemented a long-term groundwater monitoring program in accordance with the Minnesota Solid Waste Landfill Compliance Program to assess trends in water quality downgradient of the PBL. On April 23, 1985, BFI and the MPCA entered into an agreement for BFI to perform a Remedial Investigation and Feasibility Study that would: a) investigate the source, or sources, of groundwater contamination at, and near, the facility; b) assess actual and potential impacts of the releases, or threatened releases, of hazardous substances, pollutants, and contaminants from the facility on public health, welfare, and the environment; and c) identify, assess, design, develop, and implement response action alternatives. On October 23, 1990, BFI and the MPCA entered into an agreement for BFI to conduct a feasibility study; develop a plan to provide an alternative drinking water source for certain residential wells adversely affected by the release(s) from the landfill and the neighboring Crosby American Demolition Landfill; and to develop a response action plan and implement the approved response actions.

The actual and potential impacts of the releases, or threatened releases, of hazardous substances, pollutants, and contaminants from the facility on public health, welfare, and the environment were determined to be primarily Volatile Organic Compounds (VOCs) and particularly chlorinated hydrocarbons that were encountered within the landfill's groundwater monitoring network. BFI developed response action alternatives for remediation. On September 23, 1991, the MPCA approved the Updated Remedial Investigation Report for the PBL. In regard to the alternative drinking water source, PBL developed a plan, and the MPCA issued a Record of Decision in September 1991, which required the residences with affected wells to be connected to the city of Inver Grove Heights (City) water supply system. The City completed the connections supplying municipal water to the residences in December 1994. On November 21, 1994, the MPCA approved No Action Alternatives under the Superfund process for the source control and the remediation of groundwater contamination as recommended in the Updated Detailed Remedial Analysis Report.

In 2001, BFI completed a pilot study to evaluate the applicability of utilizing enhanced in-situ bioremediation as a remedial approach for mitigating VOCs in the groundwater beneath the site. The in-situ bioremediation system stimulates the growth of biological organisms in a saturated subsurface environment by introducing a supplemental food source of high fructose corn syrup that is injected into the unlined portion of the landfill through three injection wells. The bioremediation system increases the breakdown of groundwater contaminants, which in turn decreases contaminants in the groundwater. The conclusions drawn from the twelve-quarter study revealed that the introduction of high fructose corn syrup into the groundwater has resulted in marked changes in groundwater inorganic chemistry and in a statistical reduction in the concentration of chlorinated alkenes in the groundwater. In general, VOC concentrations have decreased and continue to decrease in all wells located in the pilot study area.

To mitigate the existing groundwater contamination further, BFI proposed, in July 2002, to enhance the existing source control measures at the PBL through the installation of additional leachate collection pumps within existing landfill gas collection wells. This dual extraction well system, which was installed in October 2002, is expected to reduce leachate levels in Phase I and II and subsequently reduce the concentrations of contaminants in the groundwater.

There are no changes being proposed as part of the Phase 7 development relating to the groundwater monitoring system at the landfill. For a detailed discussion on groundwater conditions at the Pine Bend Landfill, please refer to the 2023 Annual Groundwater Monitoring Report as well as a report entitled "Update on the Effects of Natural Attenuation and Source Control Measures with Respect to Groundwater Quality at the Pine Bend Landfill" which was submitted by BFI on May 15, 2003. The City of Inver Grove Heights received a copy of this report.

The MPCA MSW solid waste permit for the proposed landfill expansion will incorporate specific conditions to ensure that the permittee implements further remedial measures to address the existing groundwater contamination.

6.3.2 COUNTY

During the course of the past few years, Pine Bend Landfill has received notifications from Dakota County of minor operational deficiencies that have been immediately corrected to the satisfaction of Dakota County.

6.3.3 CITY

There have been no documented compliance issues with the City of Inver Grove Heights.

6.4 Status of Other Permits and Approvals

The following permits are required for the project. The status of the individual permits is also listed.

Unit of Government	Permit or Approval Required	Status
A. MPCA	Solid Waste Permit (SW-45)	Application Submitted and under review.
B. MPCA	NPDES General Storm Water Permit for Industrial Activity	In Compliance.
C. MPCA	NPDES General Storm Water Permit for Discharges During Construction Activity	Application to be Submitted for next construction project disturbing over 1 acre.

D. MPCA	EAW	Findings of fact issued on March 1, 2024 and negative declaration ordered.
E. MPCA	Landfill Expansion Certificate of Need	Future application on as-needed basis.
F. MPCA	Consistency with Metropolitan Area Solid Waste Management Policy Plan	In Compliance.
G. Metropolitan Council	Industrial Discharge Permit	In Compliance.
H. Dakota County (County)	Solid Waste Facility License Modification	In Compliance.
I. County	Community Host Agreement	Negotiations.
J. City	Zoning Ordinance Amendment and Conditional Use Permit	To be amended.
K. City	Non-Conforming Conditional Use Permit (#2641)	To be amended.
L. City	Host Agreement	To be amended.

Appendix A Solid Waste Management Plan

Solid Waste Management Plan

Pine Bend Landfill, SW-45
BFI Waste Systems of North America, LLC

Revised 2014

TABLE OF CONTENTS

I. INTRODUCTION.....1

II. CUSTOMER NOTIFICATION PROCEDURE 1
- A. ISW
- B. MSW

III. ISW GENERATOR WASTE EVALUATION PROCEDURE.....2
- A. Evaluating Waste Characteristics
- B. Exempt Wastes

IV. INITIAL EVALUATION PROCESS.....3
- A ISW Evaluation Process
- B. Test Results above Dakota County Limits

V. USE OF SOLID WASTE AS DAILY COVER.....3

VI. PERIODIC RE-EVALUATION 4

VII. WASTE DELIVERY REVIEW AND REJECTION PROCEDURES 4
- A. Inspection
- B. Management of Unacceptable Waste

VIII. WASTE CATEGORIZATION 6
- A. Management of Acceptable Wastes
- B. Prohibited and Unacceptable Wastes
- C. Household Hazardous Waste Management

IX. TRAINING 7

LIST OF APPENDICES

Appendix A	Acceptance Procedures for Non-Hazardous Industrial Solid Waste
Appendix B	Generator Waste Profile Sheet
Appendix C	Representative Sampling Fact Sheet
Appendix D	Pre-Approval Sampling Form
Appendix E	Industrial Solid Waste Evaluation Process
Appendix E-1	Acceptance Policy for Clean Fill and Alternative Cover Material
Appendix F	Radiation Alarm Procedure
Appendix G	Random Inspection Program
Appendix H	Acceptance and Handling Procedures for Special Types of Waste
Appendix I	Rejected Load Form
Appendix J	Household Hazardous Waste Management Plan

Note: All forms are examples and are subject to change as needed. Copies of modified forms will be sent to Dakota County Environmental Management Department and the MPCA.

I. INTRODUCTION

BFI Waste Systems of North America, LLC's (BFI) Pine Bend Landfill (PBL) accepts mixed municipal solid waste (MSW) and non-hazardous industrial solid waste (ISW). This Solid Waste Management Plan (Plan) was prepared in accordance with Minnesota Pollution Control Agency (MPCA) regulation 7035.2535 subp. 5 and addresses the management of MSW, and ISW delivered to PBL. For purposes of this Plan, the MPCA's definition of "Industrial Solid Waste" contained in regulation 7035.0300 applies. In accordance with MPCA regulations, ISW also includes construction waste and debris. PBL requires all ISW, except for construction waste and debris, to be evaluated and either approved or disapproved by PBL for disposal. The General Manager or designee will ensure that all test results are kept on file and that the evaluation procedures outlined in Section III are followed. The General Manager or designee shall review and approve each application for disposal of waste prior to disposal of the waste. The objective of this plan is to comply with all applicable requirements and to protect PBL employees, the public's health and safety, and the environment in and around the landfill.

Any amendments to this plan requiring regulatory review and approval prior to implementation will be submitted to the MPCA and Dakota County for such review and approval. In the event of a conflict between this Plan and Dakota County Ordinance 110, the Ordinance shall control.

For purposes of this Plan, a waste is unacceptable if it cannot be disposed at PBL in accordance with applicable laws, rules and regulations, county ordinance requirements, and Republic Services' Special Waste Management Plan.

II. CUSTOMER NOTIFICATION PROCEDURE

PBL has developed various methods of notifying waste generators, their service providers and haulers ("customers") of its procedures for review and acceptance of waste.

A. ISW

PBL meets with the potential customer and/or sends them an e-mail with the information required to complete a profile application. Further, PBL discusses with customers the policies and procedures concerning ISW as promulgated by the MPCA and Dakota County. PBL also notifies customers regarding the landfill's non-hazardous waste acceptance procedures (Appendix A). Lastly, PBL offers ISW training seminars and/or distributes written information to educate customers of current and proposed ISW policies as needed. When a waste is rejected, PBL will provide written notice to the customer explaining why the waste was rejected and advise the customer on what is acceptable and unacceptable.

B. MSW

PBL will provide a written description of acceptable and unacceptable waste to haulers that deliver MSW to PBL. When a waste is rejected, PBL will provide written notice to the hauler explaining why the waste was rejected and advise the hauler and/or customer of what is acceptable and unacceptable.

III. ISW GENERATOR WASTE EVALUATION PROCEDURE

A. Evaluating Waste Characteristics

PBL informs the ISW generator directly, if it is a collection company customer, or through the generator's waste service provider, if it is not a collection company customer, of the landfill's procedures for the review, acceptance and disposal of non-exempt ISW as defined below.

A Generator Waste Profile Sheet (Profile Sheet - Appendix B) must be completed in its entirety and signed by the generator's authorized representative for each non-exempt ISW. The Profile Sheet requests detailed information concerning the physical and chemical properties of the waste, the process producing the waste, as well as certification from the generator that the information provided is complete and accurate. Additional information, if required by federal, state or local regulations, will be obtained to fully characterize the waste.

It is the responsibility of the generator to fully and accurately characterize each waste stream and address all of the constituents appropriately in accordance with federal, state and local regulations. It is PBL's responsibility to properly review, and approve or disapprove ISW for disposal at Pine Bend Landfill.

PBL has developed a fact sheet (Appendix C) that is provided to generators to assist them with representative sampling. Dakota County will be provided a copy of any changes to the fact sheet. If the generator or its designee performs waste sampling, the Pre-Approval Sampling Form (Appendix D) must be completed.

B. Exempt Wastes

Certain ISW is exempt from certain requirements of Chapter 5 of Dakota County Ordinance 110, provided the generator does not mix or contaminate the waste with ISW that is not exempt. The list of exempt wastes is in Dakota County Ordinance 110 or is approved separately by Dakota County.

Records of exempt ISW accepted under Dakota County Ordinance 110, including the type of ISW and the name of the generator, are kept at PBL and made available to the County in accordance with the applicable requirements.

If a load containing exempt ISW mixed with MSW arrives at the landfill, PBL will inspect the waste for acceptability in accordance with federal, state and county regulations. If the waste can be disposed at PBL in compliance with applicable requirements, PBL will record the date, type of exempt waste, the hauler, and the generator (if it can be determined). This information will be submitted to Dakota County as required. The exempt ISW in the load will be scanned with the photo ionization detector (PID) and the data kept on file. If the waste passes the review as described in Section VII and the PID test, if the PID test is required, it will be disposed at the landfill. Certain exempt ISW types or specific ISW streams may qualify for exemptions from the PID scanning requirement. Dakota County must approve any such exemption.

IV. PBL's INITIAL EVALUATION PROCESS

A. ISW Evaluation Process

The ISW evaluation process begins when the generator submits all relevant information and analytical data on the subject waste to PBL for review. This evaluation process is outlined in the Industrial Solid Waste Evaluation Process flowchart attached as Appendix E.

A generator's request to dispose of ISW at PBL will undergo review prior to receiving approval for disposal. The General Manager or designee has the authority to deny the approval, or impose special procedures or requirements for testing and/or handling as a condition of acceptance. Approvals will be based on the regulations found in Dakota County Ordinance 110, MPCA rules, federal regulations, other applicable requirements, Republic Services' Special Waste Management Plan and this plan. If the waste meets federal, state, and county regulations and if Dakota County has approved the waste for disposal, if required, then PBL will send a Waste Approval Form to notify the generator or the generator's service provider, of each ISW approved for disposal at the landfill. This form includes a waste description, safety precautions (if any), and may recommend a method of management.

B. Test Results Above Dakota County Limits

If ISW test results indicate concentrations of any constituents above the County limits, but within the state and federal limits, a "request for deviation from acceptance levels" as provided by Ordinance 110 may be submitted by PBL to the County for review and approval.

V. USE OF SOLID WASTE AS DAILY COVER

Certain solid waste or other materials have physical characteristics that are appropriate for use as daily cover. Prior to accepting any material for use as daily cover, PBL will evaluate the material using the procedures outlined in the Acceptance Policy for Clean Fill and Alternative Cover Material as Daily Cover (Appendix E-1). These materials must be approved by Dakota County and meet MPCA requirements. These requirements will ensure that daily cover is capable of:

- minimizing infiltration of precipitation into the fill areas;
- preventing surface water from accumulating in fill areas;
- reducing wind erosion and windblown litter;
- minimizing the creation and movement of dust;
- reducing effects of freeze-thaw and other weather conditions;
- discouraging vector and burrowing animal intrusion into the site; and,
- minimizing fire potential.

Any materials that do not meet these requirements are not suitable for use as daily cover. Solid waste and other material will only be stockpiled and used in manner approved by Dakota County.

VI. PERIODIC RE-EVALUATION

Non-exempt ISW will be re-evaluated in accordance to Dakota County

Ordinance. The waste re-evaluation will be accomplished as follow:

Re-evaluation: At such time intervals as set forth by Dakota County, the generator's non-exempt ISW shall be re-evaluated. PBL will re-evaluate non-exempt ISW at time intervals set forth by Dakota County. The generator is required to complete a new Profile Sheet and submit updated analytical data of the waste, unless a Material Safety Data Sheet may adequately substitute for the analytical data. Additional information, if required by Dakota County, will be obtained to fully characterize the waste.

Analytical Exceedance Notification: If, during the re-evaluation process, the analytical results exceed county, state or federal standards, the generator will be notified immediately along with its waste service provider and Dakota County. The waste will not be disposed at the landfill unless the waste is within county, state and federal standards and the General Manager or designee approves the waste and Dakota County has approved the waste, if required.

VII. WASTE DELIVERY REVIEW AND REJECTION PROCEDURES

A. Inspection

1. Scale House Review

The scale attendant will receive from the waste hauler the Non-Hazardous Waste Manifest, if required, containing the name of the generator, type and volume of waste, point of generation, and the name of the transporter. The scale attendant will verify that a current PBL approval and a current Dakota County approval, if required, exist for this waste. If the information contained in the manifest does not match the approval, the waste will be rejected or an investigation into the discrepancy will be conducted and the discrepancy resolved prior to the waste being disposed with the resolution documented. The hauler will not be allowed to go to the working face until the discrepancy has been resolved. If the information on the manifest matches the approval, the scale attendant will initial the manifest and give it to the hauler. If the waste is ISW in an open-top container, the hauler will be directed to the inspection area. If the waste is ISW in a closed-top container or MSW, then the hauler will be told to go directly to the landfill working face. The landfill equipment operator and the General Manager or designee are notified when ISW is en route to the working face.

When waste arrives at the scale of the landfill, a radioactive material detection system screens the vehicle. The detection system is set at twice the background count rate. Appendix F details what actions will be taken if the alarm is triggered.

PBL has adopted an inspection program for MSW from non-residential sources delivered for disposal at Pine Bend Landfill. In addition to the routine inspection program described in this Plan, a site specific Random Inspection Program (Appendix G) has been implemented in accordance with federal and state standards. This program is designed to randomly screen waste delivery vehicles transporting MSW from non-residential sources and construction waste or debris for unacceptable wastes such as hazardous waste, PCB wastes, non-exempt ISW and waste not in compliance with Dakota County requirements.

MSW loads that arrive at the landfill are weighed, scanned for radioactivity, and directed to the working face for dumping. New and cash MSW customers are asked specific questions at the scale house regarding the contents of the load to identify unacceptable wastes as outlined in Dakota County Ordinance 110 (e.g. liquids, yard waste, lead acid batteries, etc.).

2. Inspection Area

When open-top vehicles containing ISW are directed to the inspection area, PBL will compare the manifested non-exempt ISW with the description on the Profile Sheet and any required PID testing will be done. For wastes that require onsite testing pursuant to applicable regulations, a representative sample of the waste will be taken and analyzed in the PBL onsite laboratory. For non-exempt ISW delivered in an open-top vehicle that is not received on a frequent basis, once approved, the landfill equipment operator will be notified and provided instructions on visually inspecting the load as it is being dumped and pushed for placement at the working face.

3. Working Face

Operators of landfill equipment look for unacceptable waste while the load is being dumped and while they are pushing the waste. If they see potentially unacceptable or suspicious waste in the load, it is reported to the General Manager or designee via radio or other means. The General Manager or designee will then review the suspicious material for acceptability in accordance with federal, state and county regulations. For example, the waste may be observed for identifying labels, noticeable odors, unusual colors or free liquids. If acceptable, the waste will be disposed. If deemed unacceptable, the waste will be rejected and the procedures identified in Section VII.B.l.a through e will be followed.

Once closed-top vehicles containing ISW have dumped their load at the working face, the General Manager or designee visually inspects and samples the waste for any necessary testing and conducts any required PID testing. Once test results have been approved, the General Manager or designee will inform the landfill equipment operator that the waste appears to be acceptable and will provide inspection instructions. Instructions for placing the waste may also be provided. Special handling procedures may be required for certain types of waste (Appendix H). However, if the test results are not approved, the waste will be rejected.

4. Manifest Completion

If the waste is disposed in part or in whole, the General Manager or designee will sign the manifest for non-exempt ISW and will document problems or discrepancies with the waste and their resolution.

B. Management of Unacceptable Waste

1. Except as provided below in paragraph 2, if unacceptable waste is observed and the General Manager or designee determines that it must be rejected, PBL will require the hauler to collect the waste and remove it from the landfill. PBL will also use its best effort to find out the source of the unacceptable waste. If an unacceptable waste is rejected, the following steps will be followed:

a. The unacceptable waste will be segregated.
b. The generator or its waste service provider, and the County will be contacted.
c. The unacceptable waste will be removed from the landfill.
d. A Rejected Load Form (Appendix I) will be completed for rejected ISW and a copy sent with the driver and a copy faxed to Dakota County.
e. Rejected MSW will be reported in the Dakota County Quarterly Operations Report.

2. If exempt ISW that has not been previously approved is delivered to the landfill, PBL may immediately approve the waste if it meets Dakota County Ordinance 110 and MPCA requirements.

VIII. WASTE CATEGORIZATION

A. Management of Acceptable Wastes

The non-hazardous industrial solid wastes, as set forth in MPCA Section 7035.2535 Subpart 5 and the Dakota County Ordinance 110, and MSW are acceptable for disposal at PBL in accordance with applicable laws, rules and regulations.

B. Prohibited and Unacceptable Wastes

"Prohibited and Unacceptable Wastes" as provided by Dakota County Ordinance 110, Pollution Control Agency Solid Waste Management Rules and Minnesota Statutes are unacceptable for disposal at the Pine Bend Landfill.

C. Household Hazardous Waste Management

Household hazardous wastes will be managed in accordance with the Household Hazardous Waste Management Plan in Appendix J.

IX. TRAINING

PBL provides training for landfill employees on subjects related to landfill operations, including training on identifying and handling unacceptable waste that may be delivered to the landfill. Dakota County will be invited to participate from time to time. The operators are encouraged to become MPCA Type II landfill operators. A state-certified operator is always on-site during operating hours.

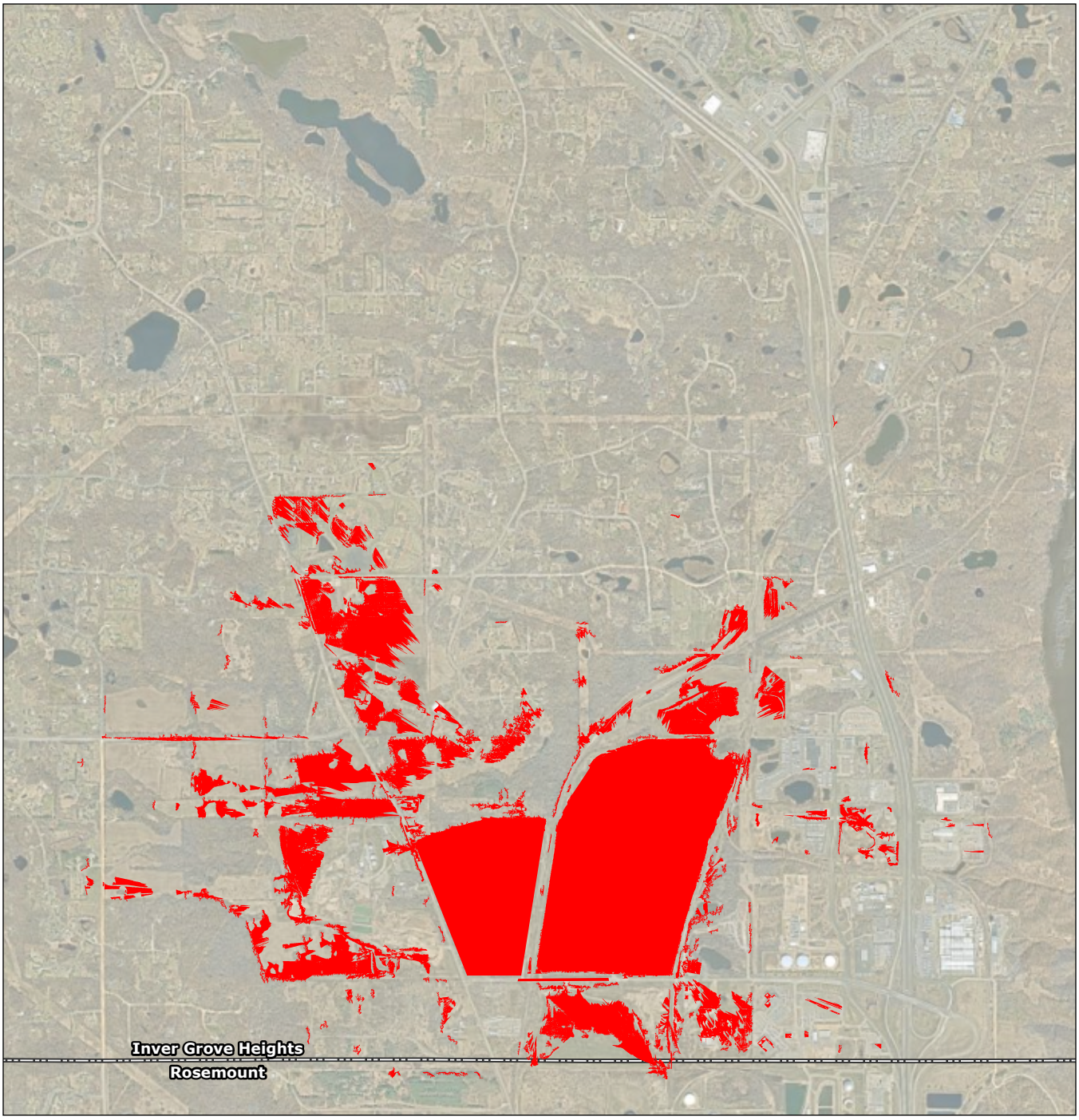

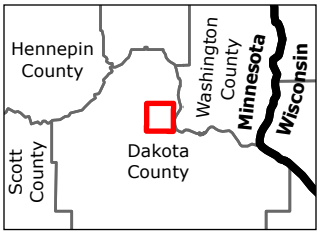

Legend

Viewable Location (Existing)

0 1,250 2,500 Feet

(At original document size of 8.5x11)
1:30,000

N

Stantec

Project Location
Inver Grove Heights, Dakota Co., MN

Prepared by ARH on 2024-06-03

Client/Project
227706442

Republic Services, Inc.
Pine Bend Landfill Expansion
Viewshed Analysis

Figure No.
1

Title
Locations where Existing Landfill is Viewable

Notes
1. Coordinate System: NAD 1983 HARN Adj MN Dakota Feet
2. Data Sources: Dakota County, Stantec
3. Background: Dakota County 2023 Aerial

V:\2277\active\227706442\03_data\gis_cad\gis\pro\pine_bend_viewshed_analysis\pine_bend_viewshed_analysis.aprx Revised: 2024-06-03 By: ahyams

Disclaimer: This document has been prepared based on information provided by others as cited in the Notes section. Stantec has not verified the accuracy and/or completeness of this information and shall not be responsible for any errors or omissions which may be incorporated herein as a result. Stantec assumes no responsibility for data supplied in electronic format, and the recipient accepts full responsibility for verifying the accuracy and completeness of the data.

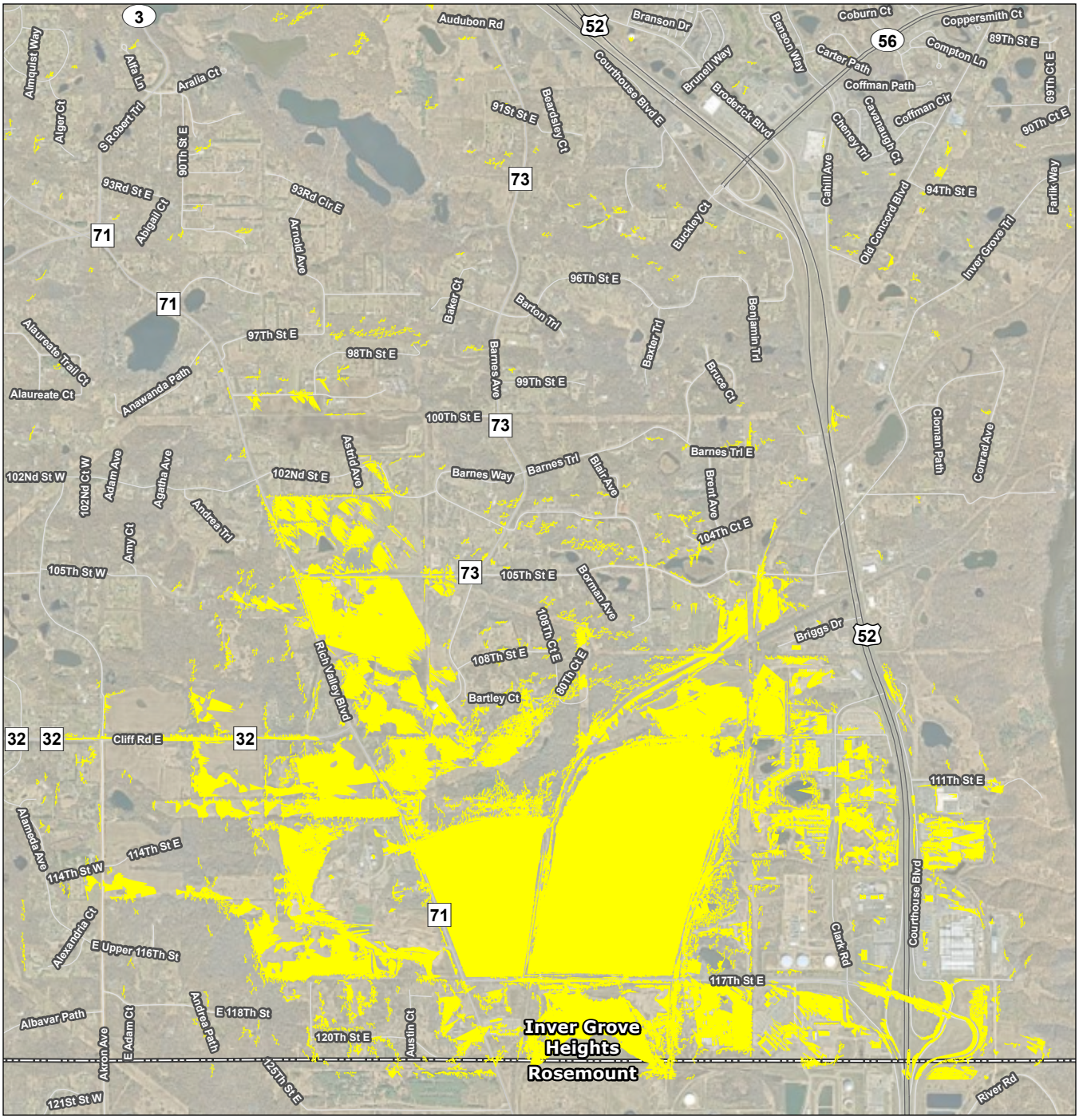

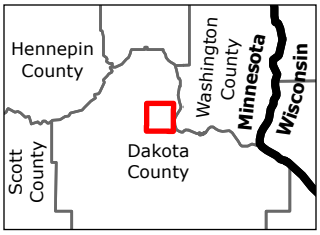

Legend

Viewable Location (Final Grade)

0 1,250 2,500 Feet

(At original document size of 8.5x11)
1:30,000

N

Stantec

Project Location Prepared by ARH on 2024-06-03
Inver Grove Heights, Dakota Co., MN

Client/Project 227706442
Republic Services, Inc.
Pine Bend Landfill Expansion
Viewshed Analysis

Figure No.
2

Title
Locations where Expanded Landfill will be Viewable at Final Grade

Page 1 of 1

Notes
1. Coordinate System: NAD 1983 HARN Adj MN Dakota Feet
2. Data Sources: Dakota County, Stantec
3. Background: Dakota County 2023 Aerial

V:\2277\active\227706442\03_data\gis_cad\gis\pro\pine_bend_viewshed_analysis\pine_bend_viewshed_analysis.aprx Revised: 2024-06-03 By: ahyams

Disclaimer: This document has been prepared based on information provided by others as cited in the Notes section. Stantec has not verified the accuracy and/or completeness of this information and shall not be responsible for any errors or omissions which may be incorporated herein as a result. Stantec assumes no responsibility for data supplied in electronic format, and the recipient accepts full responsibility for verifying the accuracy and completeness of the data.

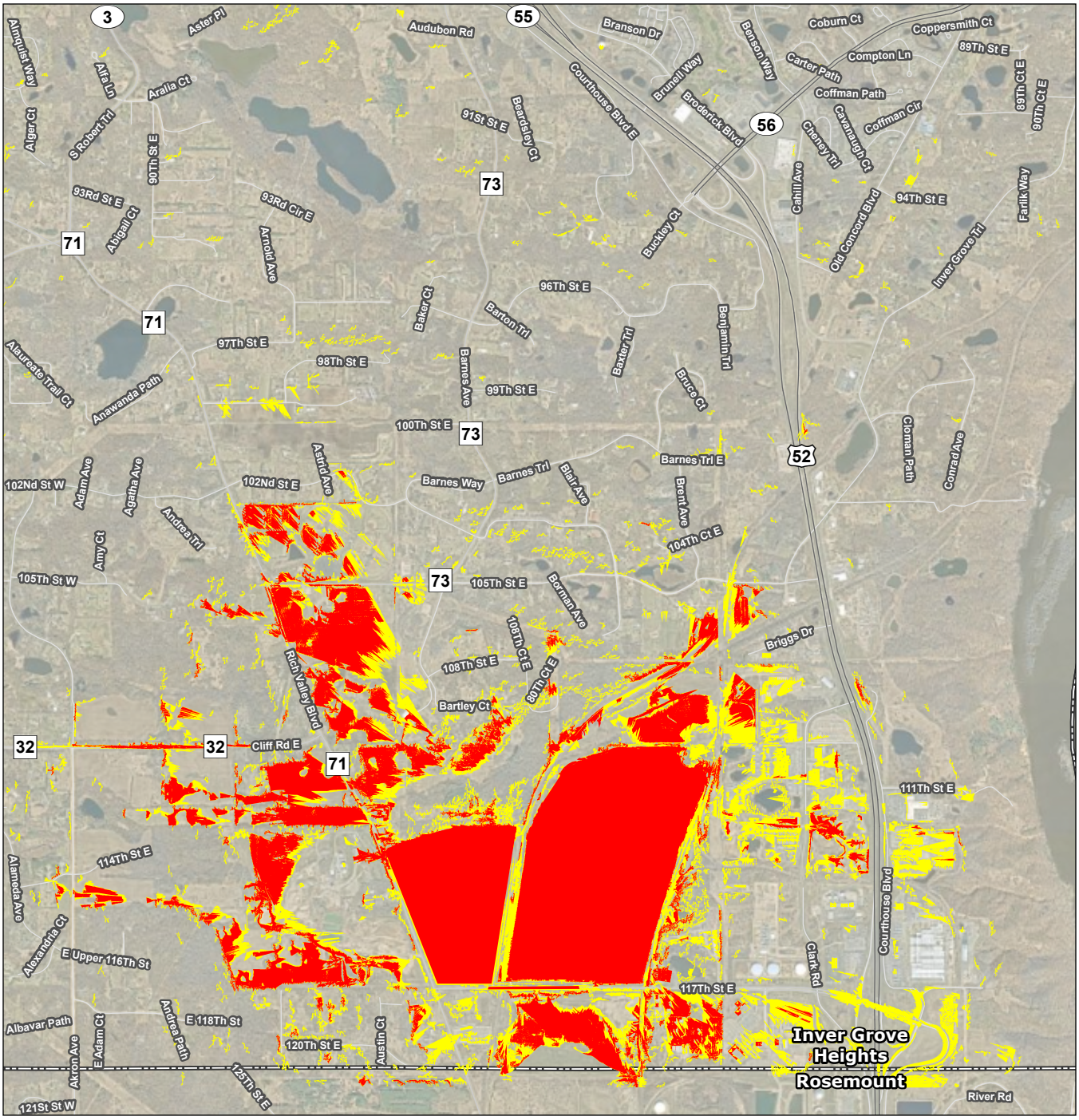

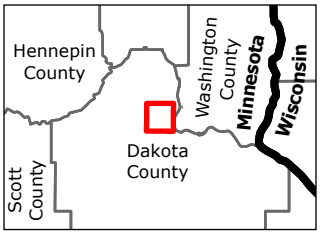

Legend

- Viewable Location (Existing)
- Viewable Location (Final Grade)

0 1,250 2,500 Feet

(At original document size of 8.5x11)
1:30,000

N

Stantec

Project Location Prepared by ARH on 2024-06-03
Inver Grove Heights, Dakota Co., MN

Client/Project 227706442
Republic Services, Inc.
Pine Bend Landfill Expansion
Viewshed Analysis

Figure No.
3

Title
Difference in Viewable Areas

Notes
1. Coordinate System: NAD 1983 HARN Adj MN Dakota Feet
2. Data Sources: Dakota County, Stantec
3. Background: Dakota County 2023 Aerial

V:\2277\active\227706442\03_data\gis_cad\gis\pro\pine_bend_viewshed_analysis\pine_bend_viewshed_analysis.aprx Revised: 2024-06-03 By: ahyams

Disclaimer: This document has been prepared based on information provided by others as cited in the Notes section. Stantec has not verified the accuracy and/or completeness of this information and shall not be responsible for any errors or omissions which may be incorporated herein as a result. Stantec assumes no responsibility for data supplied in electronic format, and the recipient accepts full responsibility for verifying the accuracy and completeness of the data.

Pine Bend Landfill Expansion

Inver Grove Heights, MN

View of Existing Landfill from Rich Valley Athletic Complex

June 11, 2024

Not to Scale

North

Stantec

Pine Bend Landfill Expansion

Inver Grove Heights, MN

View of Proposed Landfill Expansion from Rich Valley Athletic Complex

June 11, 2024 Not to Scale

North

Stantec

Pine Bend Landfill Expansion

Inver Grove Heights, MN

View of Existing Landfill from Rich Valley Blvd./Blaine Ave.

June 11, 2024 Not to Scale

North

Stantec

Pine Bend Landfill Expansion
Inver Grove Heights, MN

View of Proposed Landfill Expansion from Rich Valley Blvd./Blaine Ave.

June 11, 2024 Not to Scale

North

Stantec

Pine Bend Landfill Expansion

Inver Grove Heights, MN

View of Existing Landfill from Rich Valley Blvd./Blaine Ave. E.

June 11, 2024 Not to Scale

North

Stantec

Pine Bend Landfill Expansion

Inver Grove Heights, MN

View of Proposed Landfill from Rich Valley Blvd./Blaine Ave. E.

June 11, 2024 Not to Scale

North

Stantec

Pine Bend Landfill Expansion
Inver Grove Heights, MN

View of Existing Landfill from Bartley Court

June 11, 2024 Not to Scale

North

Stantec

Pine Bend Landfill Expansion

Inver Grove Heights, MN

View of Proposed Landfill from Bartley Court

June 11, 2024 Not to Scale

North

Stantec

Pine Bend Landfill Expansion

Inver Grove Heights, MN

View of Existing Landfill from Hwy. 52 Northbound

June 11, 2024

Not to Scale

North

Stantec

Pine Bend Landfill Expansion

Inver Grove Heights, MN

View of Proposed Landfill from Hwy. 52 Northbound

June 11, 2024

Not to Scale

North

Stantec

Pine Bend Landfill Expansion
Inver Grove Heights, MN

View of Existing Landfill from Hwy. 52 Southbound

June 11, 2024 Not to Scale

North

Stantec

Pine Bend Landfill Expansion
Inver Grove Heights, MN

View of Proposed Landfill from Hwy. 52 Southbound

June 11, 2024 Not to Scale

North

Stantec

Pine Bend Landfill Expansion

Inver Grove Heights, MN

View of Existing Landfill from Trail Head

June 11, 2024

Not to Scale

North

Stantec

Pine Bend Landfill Expansion

Inver Grove Heights, MN

View of Proposed Landfill from Trail Head

June 11, 2024 Not to Scale

North

Stantec

CITY OF
INVER GROVE
HEIGHTS

COMMUNITY DEVELOPMENT DEPARTMENT

8150 Barbara Avenue
Inver Grove Heights
Minnesota 55077

651-450-2500

www.ighmn.gov

May 22, 2024

Mr. Abdi Hassan
Staff Engineer
Resource Management & Assistance Division
Minnesota Pollution Control Agency
520 Lafayette Road North
St Paul, MN 55155

Re: City of Inver Grove Heights' Fourth Review of Pine Bend Landfill's 2022 Request for Major Modification of Permit #SW-45 Submitted to the Minnesota Pollution Control Agency

Dear Mr. Hassan:

This letter provides the City of Inver Grove Heights' fourth recommendations resulting from review of the Pine Bend Landfill (PBL) "Request for Major Modification of Permit #SW-45", prepared by Stantec Consulting Services Inc. (Stantec), dated June 2, 2022, including the addendum dated September 15, 2022 (June 2022 Application and September 2022 Addendum). This letter is a follow-up to Stantec's memorandum with attachments dated April 29, 2024 (April 29, 2024 Response) which responded to the City's April 23, 2024, recommendation letter relating to recommendations numbers 19 and 30.

The June 2022 Application and September 2022 Addendum proposes an airspace capacity expansion over the existing landfill footprint by extending the existing 3:1 (horizontal: vertical) side slopes around the entire existing landfill footprint including filling over the liner and leachate collection system previously installed over old unlined waste.

These recommendations were developed by Barr Engineering Co. (Barr). The City requests that the MPCA consider incorporation of these recommendations into the MPCA solid waste permit process. These recommendations will also be shared with Pine Bend Landfill and Dakota County.

The City also requests that the MPCA respond to this letter and indicate whether the MPCA concurs with the recommendations below.

Information used as part of the City's review included:

- April 29, 2024 Response memorandum with attachment:
  - Closure, Post-closure, Contingency Action Plan dated June 1, 2022, revised April 2024
- April 12, 2024 Response memorandum with attachments:
  - Introduction, Request for Major Permit Modification dated June 1, 2022, revised February 2024
  - Design Report dated June 1, 2022, revised April 2024
  - Operations and Maintenance Plan dated June 1, 2022, revised February 2024
  - Closure, Post-closure, Contingency Action Plan dated June 1, 2022, revised April 2024

- Surface water model 2024 (.hcp file)
- Phase 6 Geosynthetic MQC that includes Geosynthetic Clay Liner and High Density Polyethylene Liner quality certifications

- February 2024 Response Memo with attachments:
  - Introduction dated June 1, 2022, revised February 2024
  - Design Report dated June 1, 2022, revised February 2024
  - Operations and Maintenance Plan dated June 1, 2022, revised February 2024
  - Closure, Post-closure, Contingency Action Plan dated June 1, 2022, revised February 2024
  - Surface water model 2023v2 (.hcp file)

- The June 2022 Application and September 2022 Addendum

- The "Application for Permit Renewal," prepared by Wenck Associates, Inc., dated November 2013 (November 2013 Application)

- Request for Major Modification of Permit #SW-45", prepared by Wenck Associates, Inc., dated August 2015 (August 2015 Application)

- Republic Services letter dated July 31, 2014, to the City of Inver Grove Heights (Tom Link) regarding air quality concerns associated with the proposed organic waste composter and acknowledging the need to comply with City ordinances and PBL's Non-Conforming Use Certificate

- PBL's MPCA Solid Waste Permit (SW-45) dated July 30, 2015, modified May 31, 2019 (May 2019 Modified MPCA Permit)

Our review of the June 2022 Application and September 2022 Addendum focused on these twelve technical topics:

A. Waste Acceptance
B. Groundwater Monitoring System
C. Leachate Recirculation
D. Solid Waste Composting
E. Groundwater Quality
F. Surface Water Management
G. Waste Capacity
H. Liner and Leachate Collection System Design
I. Gas Monitoring and Gas Extraction/Treatment Systems
J. Final Cover Design
K. Closure, Post Closure, Contingency Action, and Operations and Maintenance Plans
L. Financial Assurance Cost Estimates

This third set of recommendations (Barr April 23, 2024 Recommendations) are provided at the end of each topic and are numbered sequentially and include the City's initial November 28, 2023 recommendations and the City's second April 5, 2024 recommendations followed by Stantec's first and second round of responses in italic text from the February 2024 and April 12, 2024 Response memos respectively.

A. Waste Acceptance

The City assumes that the 2014 Solid Waste Management Plan that is approved in the May 2019 Modified MPCA Permit is still the plan being referenced in the June 2022 Application and September 2022 Addendum. If that is the case, then there are no changes being proposed in the June 2022 Application and September 2022 Addendum regarding waste acceptance.

The 2014 Solid Waste Management Plan describes the procedures that PBL uses to manage its mixed municipal and non-hazardous industrial solid waste. More specifically, the 2014 Solid Waste Management Plan describes:

- A customer notification procedure for review and acceptance of waste,
- A list of acceptable and unacceptable wastes plus a list of wastes that PBL does not accept,
- Waste categorization,
- Waste evaluation procedures,
- Use of waste as daily cover,
- Waste inspection and rejection procedures, and
- Numerous appendices including Dakota County Ordinance 110 and a Household Hazardous Waste Management Plan.

Barr Recommendations:

1. Barr November 28, 2023, Recommendation:

   The Operations and Maintenance Manual dated August 2015 is listed as an approved plan in the May 2019 Modified MPCA Permit, and the July 2014 Solid Waste Management Plan is an appendix to the Operations and Maintenance Manual. The June 2022 Application and September 2022 Addendum should indicate that the July 2014 Solid Waste Management Plan version is still current.

   Stantec February 2024 Response:

   We agree, and the application has been updated to indicate this.

   Barr April 5, 2024 Recommendation:

   Noted, recommendation resolved.

   Barr April 23, 2024 Recommendation:

   NA

2. Barr November 28, 2023, Recommendation:

The Operations and Maintenance Plan dated June 2, 2022, should include the July 2014 Solid Waste Management Plan as an Appendix.

Stantec February 2024 Response:

We agree, and the Operations and Maintenance Plan has been updated to include this.

Barr April 5, 2024 Recommendation:

Noted, recommendation resolved.

Barr April 23, 2024 Recommendation:

NA

B. Groundwater Monitoring System

Based on the City's review, there are no changes being proposed in the June 2022 Application and September 2022 Addendum relating to the groundwater monitoring system.

Groundwater samples are collected from 22 monitoring wells located upgradient and downgradient from the landfill and two springs located downgradient from the landfill. Groundwater monitoring of flow direction and quality has been ongoing since the landfill began operating in 1971. Routine monitoring is conducted on a quarterly basis to facilitate the detection of releases to groundwater from the landfill in accordance with a sampling and analysis plan (SAP). The SAP establishes sampling methodologies, analytes, and quality assurance/quality control procedures. The SAP also provides for contingencies to increase monitoring intervals if certain water-quality levels are exceeded. Based on the contingency monitoring results, corrective action may be required.

Groundwater flows approximately southwest to northeast underneath the landfill, becoming primarily easterly along the northeast edge of the Crosby-American demolition landfill area located immediately north of PBL. The depth to the groundwater is considerable (over 100 feet in some locations). The water table is in glacial drift. Monitoring wells are completed both shallow and deep in the glacial drift and in the Prairie du Chien Group (limestone).
Groundwater underneath the site eventually discharges into the Mississippi River, east of PBL.

Barr Recommendations:

- None

C. Leachate Recirculation

Based on the City's review there are no changes being proposed in the June 2022 Application and September 2022 Addendum relating to leachate recirculation.
If implemented, leachate would be performed over lined areas of PBL as described in the November 2013 Application. The leachate would be sprayed onto the waste working surface via tanker truck.

Barr Recommendations:

- None

D. Solid Waste Composting

Solid waste composting was previously proposed as a January 2014 addendum to PBL's November 2013 Application.

City recommendations to model the potential odor and other air emissions from the proposed composting operation were not performed by PBL during the 2013 MPCA permitting process. However, based on discussions between the City and PBL and Republic Services' July 31, 2014, letter to the City, the City agreed that air quality modeling can be delayed until such time as PBL is ready to begin implementing plans to construct the organic waste compost facility. City approval is needed prior to SSOM composting implementation. Based on the City's review it unclear if solid waste composting is being proposed in the June 2022 Application and September 2022 Addendum.

Barr Recommendations:

3. Barr November 28, 2023, Recommendation:

   Please clarify if solid waste composting is proposed to be performed as part of the June 2022 Application and September 2022 Addendum.

   Stantec February 2024 Response:

   The site intends to evaluate potential solid waste composting opportunities in the future. This activity would be regulated, operated, and reported under SW-45 along with the appropriate local approvals prior to any composting activities.

   Barr April 5, 2024 Recommendation:

   Noted, recommendation resolved.

   Barr April 23, 2024 Recommendation:

   NA

4. Barr November 28, 2023, Recommendation:

   If solid waste composting is not being proposed, please confirm that PBL will obtain City and County approval prior to initiating any solid waste composting activities.

   Stantec February 2024 Response:

   Per the prior response PBL intends to evaluate potential opportunities for solid waste composting activities, and PBL will obtain the appropriate City and County approvals prior to implementing any solid waste composting activities.

   Barr April 5, 2024 Recommendation:

Noted, recommendation resolved.

Barr April 23, 2024 Recommendation:

NA

E. Groundwater Quality

As mentioned above, groundwater samples are collected from 22 monitoring wells located upgradient and downgradient from the landfill and two springs located downgradient from the landfill. Samples are analyzed for volatile organic compounds (VOCs), metals, per- and polyfluoroalkyl substances (PFAS), 1,4-dioxane, and general geochemical parameters, such as temperature, specific conductance, and pH.

As has been the case for many years, intervention limits (ILs) are occasionally exceeded for some chlorinated organic compounds that are common in municipal solid waste (e.g., trichloroethylene, tetrachlorethylene, and biogeneic breakdown products of these chlorinated compounds). Microbial reduction of the chlorinated compounds takes place in the groundwater and the geochemical indicators of this process are part of the monitoring program. The final reductive breakdown product is vinyl chloride, which is oxidized to carbon dioxide and water in the more oxidizing conditions downgradient of the landfill. Total concentrations of VOCs have generally shown a downward trend over the past several years. Some temporal increases are observed for individual parameters, which are expected.

Some PFAS concentrations in groundwater have been increasing and some have exceeded their ILs. PFAS concentrations in groundwater are expected to remain elevated in the future and may increase slightly from current levels. In addition, 1, -4-dioxane concentrations have increased at several wells, in several cases exceeding the IL. 1, -4-dioxane is considered a persistent organic pollutant and is expected to remain elevated in the future and may increase slightly from current levels.

The proposed leachate recirculation system is not expected to have an adverse impact on groundwater quality because the total mass of contaminants in the landfill is not expected to change because of leachate recirculation and because leachate recirculation will take place only over lined portions of the landfill.

The proposed solid waste composting operation is anticipated to generate leachate that will be ultimately captured by the landfill composite liner. The solid waste composting operation is not expected to generate any unique water quality parameters when compared to municipal solid waste leachate. Therefore, no modifications are needed to the leachate or groundwater monitoring programs.

Barr Recommendations:

- None

F. Surface Water Management

Barr reviewed the surface water management plan (Section 4.6 and Appendix C of the Design Report). The proposed design uses benches placed generally at 40-foot (vertical) intervals along the 3:1 side slope to direct runoff from the build-out expansion area to cable-concrete-lined trapezoidal channels, which discharge through existing and proposed junction vaults, pipes, and culverts to existing stormwater ponds. Hydro-CAD was used to simulate rainfall-runoff from the site. According to the

proposed plan, the existing ponds would not overflow from the site during the 100-year, 24-hour runoff event.

Barr Recommendations:

5. Barr November 28, 2023, Recommendation:

    Please provide the HydroCAD model files for review with the next submittal.

    Stantec February 2024 Response:

    The model file will be submitted electronically with the next submittal. Note that some model updates and improvements were made to reflect existing conditions more accurately as of now. These do not make substantial changes to the outcome of the storm events or stormwater management currently or in the future.

    Barr April 5, 2024 Recommendation:

    The HydroCAD model file was received with Stantec's February 2024 Response submittal. Barr noticed that node 7P outlet was sized as a 96-inch RCP, rather than 60-inch RCP as specified in Section 4.6.3.5 of the report and in the node description within the HydroCAD model. Please update the model as necessary to reflect the correct pipe size, rerun, and confirm that the results still meet all requirements.

    Stantec April 12, 2024 Response:

    Agreed, in the model the outlet was revised to match the existing pipe size of 60-inch. Node 7P still meets requirements with this update.

    Barr April 23, 2024 Recommendation:

    Comment resolved.

6. Barr November 28, 2023, Recommendation:

    Design Report, Section 4.6.3.1. Provide an explanation for the choices of curve numbers B and C for the sloped and flat areas, respectively. These curve numbers will result in steeper sloped areas producing less runoff volume than flatter areas. Is the cover soil different? It seems that if the cover soil were the same, the steeper sloped areas would produce greater runoff volume than the flatter areas.

    Stantec February 2024 Response:

    The curve numbers have been updated in the model to reflect C soils at 70% cover in both flat and sloped areas.

    Barr April 5, 2024 Recommendation:

    Curve number assumptions are appropriate. Recommendation resolved.

Barr April 23, 2024 Recommendation:

NA

7. Barr November 28, 2023, Recommendation:

Design Report, Section 4.6.3.5, Infiltration subheading. New impervious area is not quantified. If new impervious is created by the project, provide a drainage area figure showing the new impervious area locations, and a table quantifying new impervious area, by drainage area.

Stantec February 2024 Response:

No new impervious area is created by the project.

Barr April 5, 2024 Recommendation:

Noted, recommendation resolved.

Barr April 23, 2024 Recommendation:

NA

8. Barr November 28, 2023, Recommendation:

Design Report, Section 4.6.3.5, Infiltration subheading. Ponds used to meet infiltration requirements must be designed to meet MPCA requirements, e.g., they must draw down within 48 hours following the event and runoff must be pretreated before entering the infiltration area. If new impervious is being created by the project (see above comment) then provide pond details showing that MPCA design guidelines are met.

Stantec February 2024 Response:

No new impervious area is created by the project.

Barr April 5, 2024 Recommendation:

Noted, recommendation resolved.

Barr April 23, 2024 Recommendation:

NA

9. Barr November 28, 2023, Recommendation:

Design Report, Appendix C, Peak Run-off subheading. Sample calculations for sloped and flat areas appear to indicate that sloped areas would be HSG C while flat would be HSG B, which contradicts the earlier text.

Stantec February 2024 Response:

The curve numbers have been updated in the model to reflect C soils at 70% cover in both flat and sloped areas. The text in the report has been updated to agree.

Barr April 5, 2024 Recommendation:

Curve number assumptions are appropriate. Recommendation resolved.

Barr April 23, 2024 Recommendation:

NA

10. Barr November 28, 2023, Recommendation:

Design Report, Appendix C, Peak Run-off subheading. Sheet flow lengths up to 300 feet are used to calculate times of concentration. This is "allowed" in HydroCAD, but some agencies (e.g., NRCS) limit sheet flow length to a maximum of 100 ft. The City recommends that sheet flow lengths be limited to 100 feet as a conservative assumption.

Stantec February 2024 Response:

While general guidance does allow for sheet flow lengths of 300 feet, we have updated sheet flows to be no longer than 100 feet, the remaining length is calculated using shallow concentrated flows as recommended.

Barr April 5, 2024 Recommendation:

Sheet flow lengths updated, as noted by Barr. Recommendation resolved.

Barr April 23, 2024 Recommendation:

NA

11. Barr November 28, 2023, Recommendation:

Design Report, Appendix C, HydroCAD model output. There are several warnings where water depth exceeded reach inlets or outlets. Warnings should be resolved and/or it should be confirmed whether the 100-year event is appropriately contained within each reach as stated within the report.

Stantec February 2024 Response:

The results from the model ran after the updates indicated that all water can be maintained in the stormwater ponds. Reach warnings were typically less than one foot and would still be contained where one reach meets another. In the case of any reach overtopping for any reason the stormwater would run down the slope as overland flow to the next reach.

Barr April 5, 2024 Recommendation:

a. For back-to-back 100-year events, model contains warnings and errors that terraces and downslope channels, and ponds (3P) cannot contain the event, contrary to what the report says in Section 4.6.3.3. Please update the report to remove this statement if it is not part of

the design criteria (i.e., system is not designed to convey the back-to-back 100-year events).

Stantec April 12, 2024 Response:

> *Agreed, the statement in Section 4.6.3.3 was intended to say 100-year event instead of back-to-back 100-year events. This has been updated.*

Barr April 23, 2024 Recommendation:

> Comment resolved.

b. For the 100-year event, the model contains warnings that the downslope channels cannot contain the event, contrary to what the report says in Section 4.6.3.2. Please update the report by removing the statement that channels can contain the event and include the Stantec February 2024 response for channels that may overtop.

Stantec April 12, 2024 Response:

> *In the 100-year event there are no reaches that overtop, all reaches are at least 1.83 feet deep at the point where they meet the downslopes and the outlet depth at that point are less, so they will be contained either within the reach leading to the downslope or the downslope itself. In the back-to-back 100-year event there is one reach that exceeds the storage capacity of the reach, and in that scenario would overtop the edge of the reach by 0.08 feet. We have added the statement that in the scenario where a reach could overtop the water would be directed to a downslope reach via overland flow and ultimately be directed to the same pond it would have in the original reach.*

Barr April 23, 2024 Recommendation:

> The description in the report is sufficient, comment resolved.

c. Pond 9P storage is exceeded during the 100-year event, ensure proper overflows are accounted for or that 100-year event is appropriately contained within the structure.

Stantec April 12, 2024 Response:

> *The Pond 9P (a rectangular concrete diversion structure with culvert outlet) was previously modeled to a maximum elevation of 862, as that's where the cable concrete enters the structure in a small plunge pool with minimal storage that's lower than the adjacent ditches emptying into it. The storage could actually reach 865 before overtopping the area where the cable concrete meets the diversion structure. We have remodeled the node to include storage up to that point, and during the 100-year event the peak elevation is 863.61, where water would begin*

to pool at the end of the cable concrete but would not overtop any incoming reaches.

Barr April 23, 2024 Recommendation:

Updated modeling is sufficient, comment resolved.

G. Waste Capacity

The June 2022 Application and September 2022 Addendum proposes to add 8,185,800 cubic yards of new capacity to PBL (including cover soils).

A review of the design drawings was completed to verify the accuracy of the capacity information for the proposed expansion. Based on review of the design drawings in AutoCAD Civil3D software, it appears that the volumes shown in the June 2022 Application and September 2022 Addendum are accurate.

The September 15, 2022, Addendum last page includes information comparing the remaining permitted airspace to the remaining Certificate of Need (CON).

Barr Recommendations:

12. Barr November 28, 2023, Recommendation:

Introduction Section, page 3 table. The permitted and proposed elevations are reported using "Local Landfill Datum". Additionally, the Design Report Section 3.1, Section 4.3.1, and Section 4.6.1 refers to elevation as "NGVD", "MSL, and "AMSL" respectively. The City assumes all elevations should be using the NGVD 29 vertical datum. Please clarify and make consistent throughout the application.

Stantec February 2024 Response:

All elevations are using the NGVD 29 vertical datum. Updates have been made throughout both documents.

Barr April 5, 2024 Recommendation:

Noted, recommendation resolved.

Barr April 23, 2024 Recommendation:

NA

13. Barr November 28, 2023, Recommendation:

Design Report, Disposal Area Summary table on page 3. The Ultimate Design Capacity and Remaining Permitted Design Capacity values are different than the corresponding values on page 3 of the Introduction Section. Please reconcile.

Stantec February 2024 Response:

The Introduction Section is correct; the Design Report has been updated.

Barr April 5, 2024 Recommendation:

Noted, recommendation resolved.

Barr April 23, 2024 Recommendation:

NA

14. Barr November 28, 2023, Recommendation:

Update the values in the Design Report, Section 2.2 (Waste Flows / Site Capacity / Phasing) to provide information from 2022.

Stantec February 2024 Response:

This section has been updated to reflect the remaining capacity of Phase 6 as of December 7, 2023. Phase 5F-2 and Phase 7 volumes are the same.

Barr April 5, 2024 Recommendation:

Noted, recommendation resolved.

Barr April 23, 2024 Recommendation:

NA

H. Liner and Leachate Collection System Design

Barr's review of the Liner and Leachate Collection System Design had an emphasis on consideration of construction of the system on top of the old unlined waste deposit. Barr's review was concentrated on differential settlement regarding the liner system, leachate collection system, slope stability, and liner penetrations for gas recovery and leachate collection and piping. In review of the permit application and the permit drawings, the following recommendations regarding the liner and leachate collection system have been developed.

Barr Recommendations:

15. Barr November 28, 2023, Recommendation:

Design Report, Section 4.5.1, Historical Leachate Collection Data. The quantity of leachate collected for year 2017 through 2020 do not appear to match the annual reports for those years. Please address.

Stantec February 2024 Response:

This table has been corrected and updated, and now includes 2022 as well.

Barr April 5, 2024 Recommendation:

Noted, recommendation resolved.

Barr April 23, 2024 Recommendation:

NA

16. Barr November 28, 2023, Recommendation:

Design Report, Section 4.5.1, Historical Leachate Collection Data Update the leachate collection data to include year 2022.

Stantec February 2024 Response:

This has been updated.

Barr April 5, 2024 Recommendation:

Noted, recommendation resolved.

Barr April 23, 2024 Recommendation:

NA

17. Barr November 28, 2023, Recommendation:

Provide a summary of what areas have yet to receive a liner from Phase 5 and 6.

Stantec February 2024 Response:

As of the end of 2023 Phase 6 is completely constructed and Phase 5F-2 is the only cell remaining to construct in Phase 5.

Barr April 5, 2024 Recommendation:

Drawing 2 shows some of the Phase 6 Cells as future cells. Please update.

Stantec April 12, 2024 Response:

Agreed, as of the original submittal this was true, and since then Phase 6B-2 and
6A (constructed as one phase) have both been constructed, certified and approved. This has been updated.

Barr April 23, 2024 Recommendation:

Noted, recommendation resolved.

18. Barr November 28, 2023, Recommendation:

Provide a summary of which areas will have subgrade prepared on natural soil surface as described in the Design Report, Section 4.2 (Subbase Preparation).

Stantec February 2024 Response:

Phase 5F-2, the only remaining cell to be constructed, will have a natural soil subgrade.

Barr April 5, 2024 Recommendation:

Noted, recommendation resolved.

Barr April 23, 2024 Recommendation:

NA

19. Barr November 28, 2023, Recommendation:

Provide analysis of additional strain on the existing liner and the potential for failure due to differential settlement from the Phase 7 vertical expansion (there seems a relatively high probability that the liner will experience excess strain at locations due to increased load from Phase 7 and resulting increased differential consolidation of waste below the liner).

Stantec February 2024 Response:

A settlement analysis of the site was performed and submitted in a memo entitled, "Pine Bend Landfill Phase 6 Geotechnical Evaluation, August 27, 2015" as part of the Phase 6 Expansion Permitting Documents. The analysis used consecutive years of site survey data to estimate total potential settlement from physical creep and followed a method developed by Leonard and Floom (2003) to estimate settlement due to biodegradation of waste. A portion of that analysis was updated to estimate the total potential settlement due to the Phase 7 expansion. The calculations indicated a potential differential settlement (maximum – minimum) of approximately 3.1 feet. It should be noted that this calculation assumes no settlement has yet occurred and is therefore conservative. Over an area of liner 100 x 100 ft, this equates to approximately 3.1% liner elongation potential. The yield threshold for liner material is generally 15% elongation, suggesting that the calculated differential settlement is acceptable for liner performance. The updated settlement calculations are included in Attachment A of this comment response.

Barr April 5, 2024 Recommendation:

The February 2024 response requires clarification as to the yield threshold applicable to the site-specific geomembrane liner and the yield threshold applicable to the site-specific geosynthetic clay liner, both of which are understood to underlie the proposed Phase 7 expansion. Please provide.

Stantec April 12, 2024 Response:

QC test results from individual cells are included as an attachment. Yield threshold of GCL is not usually tested during MQC, however a typical value is approximately 10%. The minimum observed yield elongation for any individual roll of the 60-mil HDPE was 14%. As described in the previous comment response memorandum the likely liner elongation potential in a 100x100 area is

approximately 3.1%, suggesting that the liner and GCL performance should be considered acceptable.

Barr April 23, 2024 Recommendation:

Please provide a supporting reference(s) for the stated yield threshold of GCL of approximately 10%, and specifically for the GCL type to be used on this project.

Stantec April 29, 2024 Response:

Please see attached the excerpt from the Geotechnical Fabrics Report's 1997 Specifier's Guide, showing greater than 10% tensile elongation for most GCLs, including Bentomat ST, the primary GCL used in Phase 6 cell construction events. Phone conversations with CETCO led to the discovery that there aren't recent published values widely available due to it not being a typical test, but in testing find the elongation at failure to be a wide range of approximately 5-40%, dependent on GCL type, individual samples, peak tensile strength at the time of failure, etc. With the previously described liner elongation potential of 3.1% the GCL performance should still be considered satisfactory.

Barr May 22, 2024 Recommendation:

Noted, recommendation resolved.

Stantec indicates that "Yield Threshold" (i.e., the point that is the limit of elastic behavior) is a value on the order of 10% strain or less. However, the response does not directly provide supporting "Yield Threshold" information for GCLs. Instead, the CETCO document attached to Stantec's April 29, 2024 memo provides "Tensile Elongation" data which is the measure of both elastic and plastic behavior.

Note that Barr's response is acknowledgement that, based on the liner design, the geomembrane will be relied upon to be the primary hydraulic barrier layer and the GCL beneath it would serve to minimize leakage through any holes in the geomembrane that escape detection and repair during geomembrane installation. Further, if GCL failure occurred it would likely be in isolated areas of significant differential waste settlement. With proper geomembrane installation quality control as planned, the likelihood of a geomembrane hole(s) remaining unrepaired is small, and generally no greater in an area of differential settlement that is severe enough to inhibit the performance of the GCL than elsewhere. Hence the response of "recommendation resolved."

20. Barr November 28, 2023, Recommendation:

The Geotechnical Evaluation provided as Application Appendix D is generally inadequate and should include:

a. Demonstration of effectiveness (technical papers or other) of the suggested "drain liner with an overlying geotextile" as substitute for a geonet composite. For the former, a geotextile that is not bonded to the geonet could yield excessively and fill gaps in the geonet thereby reducing the geonet's flow transmission capability.

Stantec February 2024 Response:

After additional review PBL intends to use the geonet geocomposite shown on the permit drawings rather than evaluate alternatives. The model reflects the geonet geocomposite already.

Barr April 5, 2024 Recommendation:

Noted, recommendation resolved.

Barr April 23, 2024 Recommendation:

NA

b. Literature and site-specific test data that supports the cohesion values and friction angles used in the stability analyses that are presented. The factors of safety appear unreasonably high for a 3H:1V slope and are likely the result of cohesion values and friction angles for which supporting literature and test data is not provided.

Stantec February 2024 Response:

Interface friction and cohesion values for the proposed cover and liner components were previously established in a comment response submittal completed for the Pine Bend site on June 24, 2016, entitled, "Response to Geotechnical Comments – City of Inver Grove Heights, Request for Major Modification of Permit SW-45, Pine Bend Landfill." The liner component interface friction and cohesion values established in that submittal were based on interface friction testing of the liner components over a range of potential effective stress loads representing the proposed waste overlay. The values presented in that submittal were adopted for use in this comment response and are presented in the table below. In addition, conservative values of internal friction and cohesion are shown for cover soils, MSW, and existing native soils:

Interface	Friction (Degrees)	Cohesion (psf)
Peak Strength		
Buffer Soil/Liner	27.1	86
Liner/Geo-Composite	19.1	58
Geo-Composite/Cover Soils	33.3	62
Large Displacement		
Buffer Soil/Liner	26.5	81
Liner/Geo-Composite	13.4	59
Geo-Composite/Cover Soils	33.3	55
Other Materials		
Cover Soils	28	0
MSW	30	0
Native Soils	30	0

Barr April 5, 2024 Recommendation:

It is understood from previous responses that the 3H:1V covered areas are reported to be performing well. Include in future annual reports descriptions of any veneer (cover) instability and/or extra maintenance required on 3H:1V covered areas, if either condition occurs.

Stantec April 12, 2024 Response:

PBL will include any information regarding cover instability or noted maintenance and repairs of the cover area in annual reports, or a statement declaring that no issues were noted.

Barr April 23, 2024 Recommendation:

Noted, recommendation resolved.

c. A veneer stability analyses of an isolated segment of the cover system on a 3H:1V slope appears to be absent from the analysis but is required to confirm stability of the proposed cover system.

Stantec February 2024 Response:

A veneer stability analysis of an isolated segment of the proposed cover system on a 3H:1V slope was completed using SLOPE/W, a limit equilibrium slope stability analysis software. In the first analysis, all cover components were modeled assuming zero cohesion in the interface strength, except for the liner/geo-composite interface. Interface friction testing shows that cohesion is a component of the strength at this interface, and this should not change based on variations in the soil components of the cover. The MSW waste material was modeled as an impenetrable surface to limit the analysis to the cover components. The program's optimization function was enabled to allow the program to determine if the critical failure surface would closer resemble a circular or block type failure. The resulting factor of safety for this veneer analysis was 1.60, exceeding the desired minimum factor of safety of 1.5 for long term stability.

As a check, a second analysis as performed assuming no cohesion in the liner/geo-composite interface to represent a conservative and short-term case. The resulting factor of safety was 1.31, exceed the desired minimum factor of safety of 1.2 for short-term stability. The outputs for both veneer analyses are shown below.

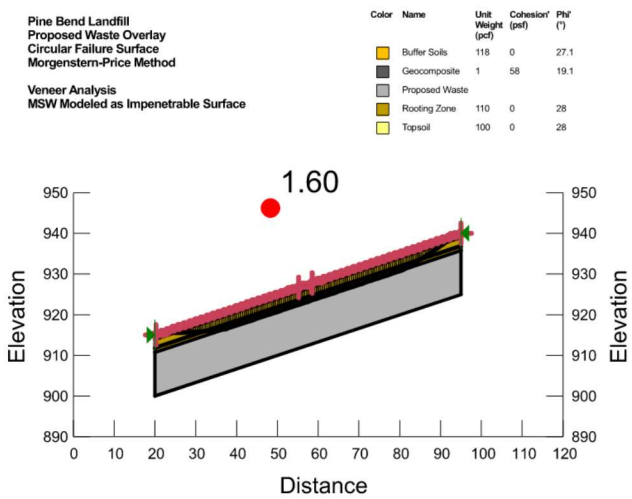

Veneer Analysis – Long Term Slope Stability

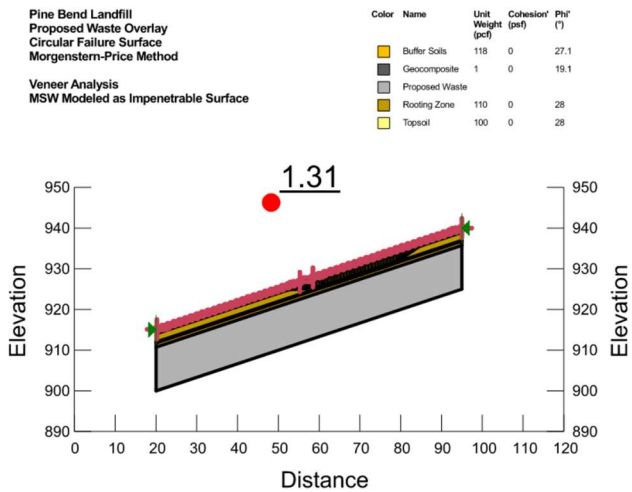

Veneer Analysis – Short Term Slope Stability

Barr April 5, 2024 Recommendation:

Noted, recommendation resolved.

Barr April 23, 2024 Recommendation:

NA

d. The overall slope stability analysis lacks evaluation of alternate failure surface entry and exit points and does not include analyses that treat the "existing cover liner" as an impenetrable surface. These additional analyses are critical to understanding overall stability of the proposed slope system.

Stantec February 2024 Response:

The model was updated to reflect the existing and proposed conditions as illustrated in Section C of the plan set. Analyses were completed to evaluate the proposed overlay slope stability assuming that the existing Phase 2 waste material below the Phase 5/6 liner is an impenetrable surface. This

configuration was modeled assuming no cohesion in the waste or native materials and with and without cohesion on the Phase 5/6 liner. A third analysis considered global slope stability with all layers defined as penetrable and no cohesion strength attributed to any materials. As in the veneer analysis above, the program's optimization function was enabled to allow the program to determine if the critical failure surface would closer resemble a circular or block type failure. In each case, the resulting factor of safety exceeded the desired long-term factor of safety of 1.5. The model outputs are included below for reference.

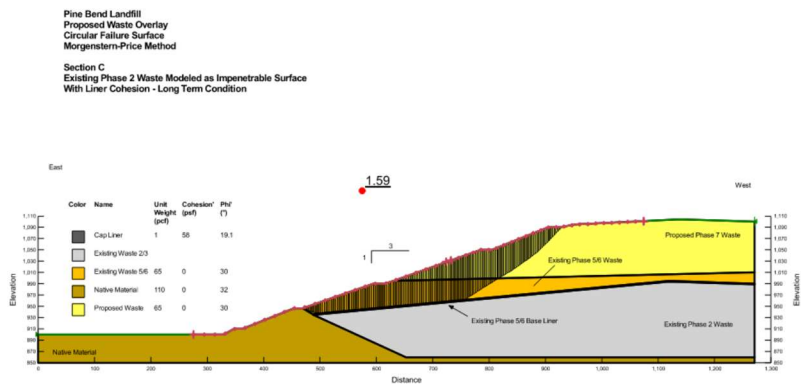

Slope Stability Analysis – Phase 2 Waste Impenetrable, With Phase 5/6 Liner Cohesion

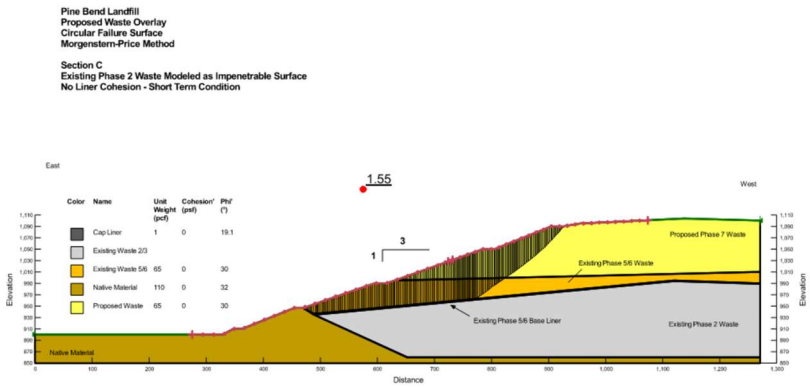

Slope Stability Analysis – Phase 2 Waste Impenetrable, No Phase 5/6 Liner Cohesion

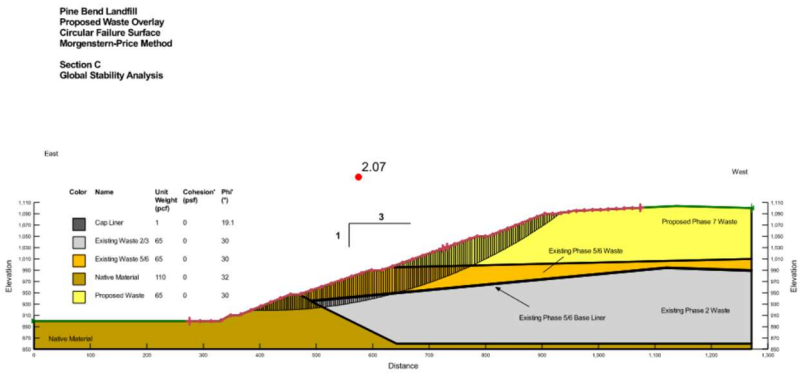

Barr April 5, 2024 Recommendation:

Noted, recommendation resolved.

Note that Barr's response is acknowledgement that, based on the available information and stability model outputs provided, the analyses performed appear to provide satisfactory slope stability factors of safety. Barr has not performed its own confirmatory modeling as part of this analysis.

Barr April 23, 2024 Recommendation:

NA

e. The slope stability analysis outcomes are based on cohesion being present in all of the soil layers and at the interface between soils and geomembrane. This is potentially not a realistic assumption (non-cohesive soils may be used for construction) and it does not represent a conservative approach to the analyses. The stability analyses should be expanded by analyzing stability with zero cohesion.

Stantec February 2024 Response:

The analyses included in this comment response memo were performed with zero cohesion in the soil layers and with and without cohesion on the Phase 5/6 liner.

Barr April 5, 2024 Recommendation:

Noted, recommendation resolved.

Barr April 23, 2024 Recommendation:

NA

I. Gas Monitoring and Gas Extraction/Treatment Systems

As indicated in Operations and Maintenance Plan, Appendix B-Gas Management and Monitoring Plan, which is included in the June 2022 Application and September 2022 Addendum, "Minnesota Rule 7035.2815 Subp. 11 requires that the concentration of any explosive gas not exceed the LEL at the property boundary or 25 percent of the LEL in or around facility structures." LEL is an abbreviation for Lower Explosive Limit.

The existing gas management system at PBL consists of:

- Gas extraction wells and piping,
- The gas monitoring system, and
- The Renewable Natural Gas (RNG) facility that was planned to start up in Spring 2022.

Based on the review of the Operations and Maintenance Plan in the June 2022 Application and September 2022 Addendum, the gas extraction system currently includes 190 gas extraction wells at the site and additional gas extraction wells are planned for Phase 5 and 6. Also, new gas extraction

wells a piping are planned to be installed for Phase 7 as shown on the Plan Drawings included as Appendix A in the Design Report. The construction and installation of the additional gas extraction wells will be in accordance with the MPCA-approved design and PBL design standards. Extracted gas is currently piped through laterals, sub-headers, and header piping to RNG facility that was planned to startup in Spring 2022.

The gas monitoring system is comprised of the three continuous electronic monitoring devices located in occupied buildings at PBL and 39 methane (gas) monitoring probes completed at varying depths around the perimeter of the landfill. The Gas Management and Monitoring Plan indicates the probes are monitored quarterly unless a positive gas reading is recorded, in which case, monitoring is increased to monthly until two consecutive passing months readings are recorded.

Historically, elevated concentrations of methane have been detected in several of the subsurface gas monitoring probes located along the eastern, southern, and western boundaries of PBL. Methane concentrations in the gas monitoring probes around the facility exceeded the LEL on numerous occasions in 2022 and previous years. Based on these monitoring results, it does not appear that the existing controls at the PBL meet the requirements of Minnesota Rule 7035.2815 Subp. 11. PBL has been working with the MPCA and City to address gas migration concerns for many years and has most recently submitted the "2022 Gas Migration Remedial Action Report" dated February 2023 as Attachment 6 to the 2022 Annual Report.

Based on review of the June 2022 Application and September 2022 Addendum, proposed augmentations to the gas extraction systems includes:

- Vertical extension of existing gas extraction wells in the Phases 6 and 7 footprints
- Installation of pumping stations (e.g., PS-5) that will be used for the extraction of leachate and may be retrofitted for gas extraction from the unlined waste beneath the Phase 6 build out. Seven pumping stations have been installed as of 2022 with two of those operating with leachate pumps. Six additional pumping stations are planned to be installed for a total of 11.
- Installation of a horizontal gas collection system beneath the final cover system in the Phases 6 and 7 build out where the proposed waste thickness is too thin for additional gas wells.
- Completion of a gas header (18-inch diameter) loop around the landfill once final grades have been reached.

Barr Recommendations:

21. Barr November 28, 2023, Recommendation:

Design Report, Section 4.7.1 should include a discussion that subsurface landfill gas is migrating beyond the property boundary at concentrations above the LEL and a summary of the efforts to mitigate.

Stantec February 2024 Response:

This section has been updated to include the discussion referenced above.

Barr April 5, 2024 Recommendation:

Noted, recommendation resolved.

Barr April 23, 2024 Recommendation:

NA

22. Barr November 28, 2023, Recommendation:

Design Report, Section 4.7.4.2 describes the horizontal gas collectors installed in the Phase 6 expansion area. However, no discussion is included about any horizontal gas collectors as part of the Phase 7 expansion although Plan Drawings 8 and 9 seem to indicate that horizontal collectors will be installed as part of Phase 7. Please address this apparent discrepancy.

Stantec February 2024 Response:

The horizontal gas collectors shown in the drawings are intended to be installed as part of Phase 6. Construction of horizontal collectors will begin in 2024. Since the Phase 6 waste mass was not deep enough to install vertical gas extraction wells horizontal collectors will be installed. In Phase 7 the waste mass will be deep enough to install gas extraction wells, which will also collect gas from portions of Phase 6. Additional gas collectors may be installed in the future by PBL in addition to the vertical extraction wells, at their discretion.

Barr April 5, 2024 Recommendation:

Noted, recommendation resolved.

Barr April 23, 2024 Recommendation:

NA

J. Final Cover Design

Barr's review of the final cover design was concentrated on differential settlement regarding the cover system and surface water drainage system, slope stability, and liner penetrations for the gas and leachate system components. In review of the June 2022 Application and September 2022 Addendum and the associated permit drawings, the following questions regarding the final cover system have been developed.

The slope stability factors of safety are computed based on assumed friction angles with no supporting data provided. The factors of safety seem unreasonably high and several potential failure scenarios are not evaluated (i.e., additional strain on the liner and the potential for failure due to differential settlement from the Phase 7 vertical expansion). See Section VIII of this letter for additional comments regarding slope stability.

Barr Recommendations:

23. Barr November 28, 2023, Recommendation:

Update the text to describe the current conditions in the Design Report, Section 1.1 (Introduction).

Stantec February 2024 Response:

The current phase construction status has been updated.

Barr April 5, 2024 Recommendation:

Noted, recommendation resolved.

Barr April 23, 2024 Recommendation:

NA

24. Barr November 28, 2023, Recommendation:

Provide a summary of which portions of the 3H:1V slope area has final cover in place, how long it has been in place, and how has it performed from an infinite slope stability and erosion control standpoint.

Stantec February 2024 Response:

Approximately 11 acres of final cover have been installed in Phase 4 on the west side of the landfill. The final cover was constructed in 2011 and has had no slope stability or erosion control issues noted.

Barr April 5, 2024 Recommendation:

Noted, recommendation resolved.

Barr April 23, 2024 Recommendation:

NA

25. Barr November 28, 2023, Recommendation:

If there is no on-site demonstration of suitable performance of this cover design, then provide evidence of adequate performance of this 3H:1V cover design from similar sites.

Stantec February 2024 Response:

The in-place cover has demonstrated suitable performance to continue with this cover design.

Barr April 5, 2024 Recommendation:

Noted, recommendation resolved.

Barr April 23, 2024 Recommendation:

NA

26. Barr November 28, 2023, Recommendation:

Clarify the thickness of the Buffer Soils beneath the final cover section (12" thickness shown in the Drawings on Drawing No. 13 whereas a 6" thickness is specified in the Design Report, Section 4.6.1 – Design Overview).

Stantec February 2024 Response:

The detail in the drawing is correct, 12 inches of buffer soils will be installed, and the design report has been updated to reflect that.

Barr April 5, 2024 Recommendation:

Noted, recommendation resolved.

Barr April 23, 2024 Recommendation:

NA

K. Closure, Post Closure, Contingency Action, and Operations and Maintenance Plans

The Operations and Maintenance plan in the June 2022 Application and September 2022 Addendum does not appear to have any significant changes from the August 2015 Application.

The Closure, Post Closure, Contingency Action Plan in the June 2022 Application and September 2022 Addendum does not appear to have any significant changes from the August 2015 Application, except for:

- Updated normal operating hours of the facility,
- Removal of discussion on tires, e-waste, and white goods removal from waste acceptance
- Removal of landfill design volumes and estimated dates for each phase closure
- Removal of a closure phasing plan

Barr Recommendations:

27. Barr November 28, 2023, Recommendation:

Section 3.5 (Waste Placement Techniques) of the Operations and Maintenance Plan considers the proposed Phase 7 expansion, provide consideration for all areas yet to be constructed.

Stantec February 2024 Response:

The only remaining phase to be constructed is Phase 5F-2, and the waste placement techniques described in Section 3.5 would apply in 5F-2 the same way they would in Phase 7.

Barr April 5, 2024 Recommendation:

Noted, recommendation resolved.

Barr April 23, 2024 Recommendation:

NA

28. Barr November 28, 2023, Recommendation:

Provide landfill design volumes and estimated dates for each phase closure within the Closure, Post-Closure, Contingency Action Plan Section 2.2 (Notification of Cell Closure).

Stantec February 2024 Response:

This section has been updated to include more information about planned closure phasing.

Barr April 5, 2024 Recommendation:

Noted, recommendation resolved.

Barr April 23, 2024 Recommendation:

NA

29. Barr November 28, 2023, Recommendation:

Provide a closure phasing plan within the Closure, Post-Closure, Contingency Action Plan Section 2.4 (Closure Schedule).

Stantec February 2024 Response:

This section has been updated to include more information about the planned closure phasing.

Barr April 5, 2024 Recommendation:

Noted, recommendation resolved.

Barr April 23, 2024 Recommendation:

NA

30. Barr November 28, 2023, Recommendation:

Section 2.9 (Closure Cost Estimate) within the Closure, Post-Closure, Contingency Action Plan reports an area of 69.4 acres whereas Table 1 lists 32.6 acres. Please reconcile or provide rationale for the difference.

Stantec February 2024 Response:

This has been reconciled, Table 1 has been updated.

Barr April 5, 2024 Recommendation:

a. Closure, Post-Closure, Contingency Action Plan, Table 1. The unit cost for 40-mil LLDPE Liner decreased from $0.70/Square Feet in the June 2022 Application and September 2022 Addendum to $0.35/Square Feet in the February 2024 Response. Please reconcile or provide rationale for the difference.

   Stantec April 12, 2024 Response:

   The original value was a typical landfill cost estimate. Republic Services gets a discounted rate from manufacturers due to a high volume of

purchases nationwide, the updated cost estimate includes a value based on their current rate to order and install the material.

Barr April 23, 2024 Recommendation:

Financial assurance is required in case a landfill owner walks away from the facility. Therefore, the financial assurance cost estimates do not reflect the prices that the landfill owner could obtain but instead must reflect the costs that the MPCA or some other party would need to pay. Please review the April 5, 2024 Barr recommendation above and reply.

Stantec April 29, 2024 Response:

The rationale makes sense and we have reverted the unit cost to the original cost.

Barr May 22, 2024 Recommendation:

Noted, recommendation resolved.

b. The unit cost for Geocomposite decreased from $1.13/Square Feet in the June 2022 Application and September 2022 Addendum to $0.44/Square Feet in the February 2024 Response. Please reconcile or provide rationale for the difference.

Stantec April 12, 2024 Response:

The original value was a typical landfill cost estimate. Republic services gets a discounted rate from manufacturers due to a high volume of purchases nationwide, the updated cost estimate includes a value based on their current rate to order and install the material.

Barr April 23, 2024 Recommendation:

Financial assurance is required in case a landfill owner walks away from the facility. Therefore, the financial assurance cost estimates do not reflect the prices that the landfill owner could obtain but instead must reflect the costs that the MPCA or some other party would need to pay. Please review the April 5, 2024 Barr recommendation above and reply.

Stantec April 29, 2024 Response:

The rationale makes sense and we have reverted the unit cost to the original cost.

Barr May 22, 2024 Recommendation:

Noted, recommendation resolved.

c. The lump sum unit cost for Gas Collection System Infrastructure was $200,000 in the June 2022 Application and September 2022 for

32.6 acres of final cover. The lump sum unit cost stayed the same in the February 2024 Response however the final cover area of 173 acres was over 5 times greater. It appears that the lump sum cost should be increased proportionally to approximately $1,000,000. Please reconcile or provide rationale for the difference.

Stantec April 12, 2024 Response:

Pine Bend intends to complete the majority of the gas collection system installation in Phase 7 during Phase 7 operations, prior to closure events. At this time we are proposing to leave the value in the cost estimate at $200,000 as an estimate of the last gas system construction event to be completed at the time of final closure.

Barr April 23, 2024 Recommendation:

The closure cost estimate must reflect the cost to close the landfill based on the area that is open. Because the gas collection system infrastructure is part of closure that a party like the MPCA may need to perform if PBL were to walk away from the site, the cost for it must be included in the closure cost estimate. Please review the April 5, 2024 Barr recommendation above and reply.

Stantec April 29, 2024 Response:

The rationale makes sense and we have updated the cost based on the size of the open area at the site.

Barr May 22, 2024 Recommendation:

Noted, recommendation resolved.

d. It appears that final cover should be and could be installed in smaller acreages as areas reach final grades rather than having 173 acres without final cover. Please explain or modify.

Stantec April 12, 2024 Response:

The cost estimate was originally set up as a single, maximum possible event. The likely scenario is approximately 5 events of 20-40 acres of closure at a time, and the cost estimate has been updated as such.

Barr April 23, 2024 Recommendation:

Noted, recommendation resolved.

L. Financial Assurance Cost Estimates

The MPCA requires financial assurance for all mixed municipal solid waste landfills in Minnesota, including PBL. Financial assurance is intended to provide funds for closure, post-closure, and contingency action activities if the landfill owner goes out of business.

Based on the City's review, the approach and most unit costs appear to be reasonable and are consistent with the financial assurance updates provided in the annual reports.

Barr Recommendations:

31. Barr November 28, 2023, Recommendation:

The total financial assurance value should be updated to match the 2022 Annual Report value of $20,846,216.

Stantec February 2024 Response:

The financial assurance values in the 2022 Annual Report are based on approved closure, post-closure, and contingency action costs from the 2018 expansion. The closure, post-closure, and contingency action cost estimates were updated based on this expansion and current unit costs. Entering those values into the MPCA's Payment Rate Estimator results in a total of approximately $25.4 Million for 2024.

Barr April 5, 2024 Recommendation:

The values for Closure ($15,054,640) and Contingency Action ($1,163,414) shown in Section 5 of the Closure, Post-closure, Contingency Action Plan dated June 1, 2022, revised February 2024 do not appear to match the value in the subsequent tables. Please review and modify.

Stantec April 12, 2024 Response:

The values in the tables were 2023 cost estimates, which were then inflated to 2024 dollars using the MPCA Payment Rate Estimate Table (included as Table 7 after the cost estimate tables). Table 1 and Table 7 have both been updated in accordance with comment and responses above, with the same methodology as the previous submittal. With the updates to the cost estimate tables PBL is proposing to use the new values as "2024 approved cost estimates" for the 2024 Annual Report if the permit is issued before then. Financial assurance will be updated once an approved permit is issued.

Barr April 23, 2024 Recommendation:

Noted, recommendation resolved.

32. Barr November 28, 2023, Recommendation:

Please provide the value of the bond to Dakota County.

Stantec February 2024 Response:

The bond in place with Dakota County is for $643,631.00

Barr April 5, 2024 Recommendation:

Noted, recommendation resolved.

Barr April 23, 2024 Recommendation:

NA

In addition to submitting the June 2022 Application and September 2022 Addendum to the MPCA, Pine Bend Landfill will also need to apply to the City of Inver Grove Heights for the proposed project. The City will need to consider an Ordinance Amendment, Conditional Use Permit Amendment, and Non-Conforming Use Certificate Amendment for this proposed project. It is the City's understanding that the MPCA will not reissue the solid waste permit until these City approvals are complete.

Thank you for the opportunity to provide comments and recommendations. The City appreciates your consideration of the recommendations and looks forward to your reply. If the MPCA has any questions, please contact City of Inver Grove Heights Environmental Specialist Ally Sutherland at 651-604-8511 or asutherland@ighmn.gov.

Sincerely,

CITY OF INVER GROVE HEIGHTS

c: Ally Sutherland, City of Inver Grove Heights
Aaron Janusz, Pine Bend Landfill
Tyler Kraft, Pine Bend Landfill
Tom Shustarich, Stantec Consulting Services Inc.
Terry Muller, Dakota County
Dave Magnuson, Dakota County
Bryan Pitterle, Barr Engineering Co.
Jeff Ubl, Barr Engineering Co.

BFI Waste Systems
of North America, LLC
Pine Bend Landfill
Inver Grove Heights, Minnesota

2022 Major Permit Modification

Prepared By:
Stantec
Stantec Consulting Services, Inc.
1800 Pioneer Creek Center
Maple Plain, MN 55359

2022.02.21
PROJECT NUMBER: 22704791

INDEX

1. TITLE AND INDEX SHEET
2. EXISTING CONDITIONS MAP (EAST SIDE)
2A. EXISTING CONDITIONS MAP (WEST SIDE)
3. PHASING PLAN
4. PHASE 7-VERTICAL EXPANSION FINAL COVER GRADING PLAN
5. PHASE 7-VERTICAL EXPANSION SURFACE WATER MANAGEMENT PLAN
6. EXISTING GAS PIPING PLAN NORTH HALF
7. EXISTING GAS PIPING PLAN SOUTH HALF
8. PROPOSED GAS PIPING PLAN NORTH HALF
9. PROPOSED GAS PIPING PLAN SOUTH HALF
10. CROSS-SECTION A
11. CROSS-SECTION B
12. CROSS-SECTION C
13. LINER SYSTEM DETAILS
14. LEACHATE RISER MANHOLE DETAILS
15. SURFACE WATER MANAGEMENT DETAILS
16. GAS SYSTEM DETAILS
17. GAS SYSTEM DETAILS
18. GAS SYSTEM DETAILS

U:\22704791\drawings\PN_01.dgn
DATE 2/21/22
ORIGINAL SHEET - ANSI D

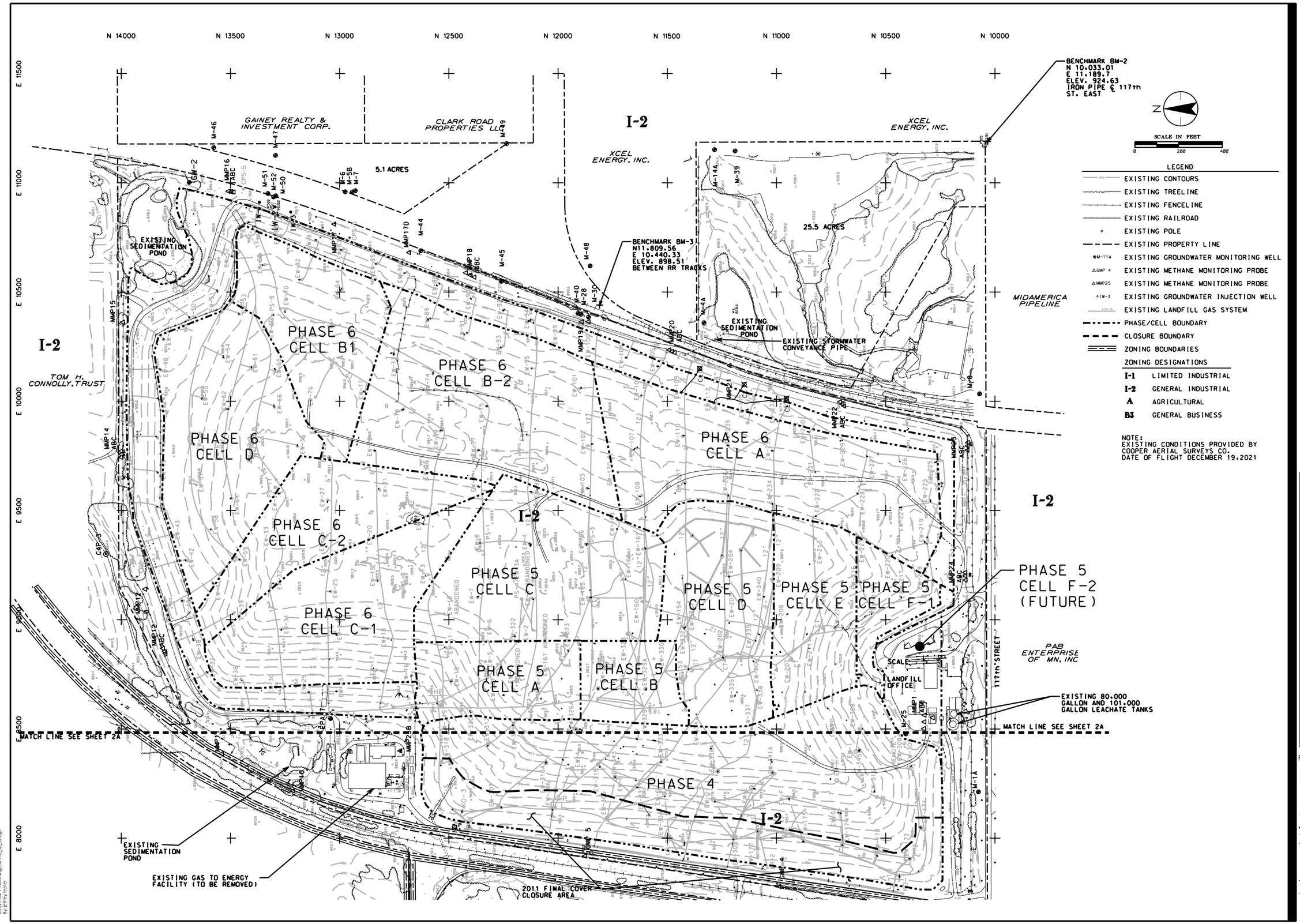

Stantec

Issued	By	Appd.	YY.MM.DD

Client/Project
BFI WASTE SYSTEMS OF NORTH AMERICA, LLC
PINE BEND LANDFILL

2022 MAJOR PERMIT MODIFICATIOON

INVER GROVE HEIGHTS, MINNESOTA

Existing Conditions Map (East Half)

Permit-Seal

I HEREBY CERTIFY THAT THIS PLAN, SPECIFICATION, OR REPORT WAS PREPARED BY ME OR UNDER MY DIRECT SUPERVISION AND THAT I AM A DULY LICENSED PROFESSIONAL ENGINEER UNDER THE LAWS OF THE STATE OF MINNESOTA.

PRINT NAME THOMAS J. SHUSTARICH

SIGNATURE

DATE yy/mm/dd LICENSE # 21210

Project Number: 227704791

04791e_sp_02.dgn

JWT 2022.02.25

Drawing No. 2

Revision 0

Sheet 2 of 18

U:\227704791\cadfiles\04791e_sp_02.dgn
By: jeffrey.tepler

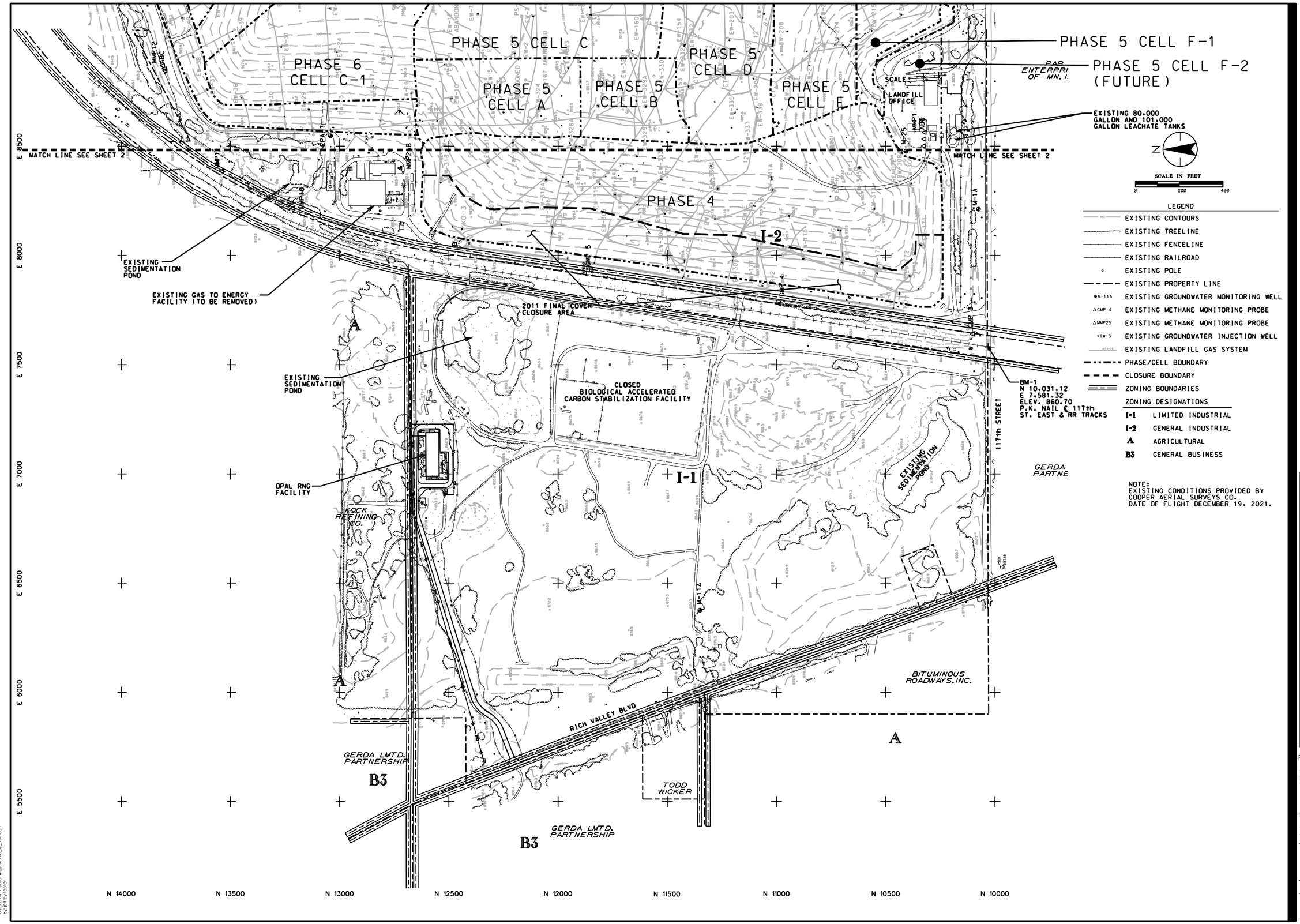

NOTE:
EXISTING CONDITIONS PROVIDED BY COOPER AERIAL SURVEYS CO.
DATE OF FLIGHT DECEMBER 19, 2021.

Stantec

Issued	By	Appd.	YY.MM.DD

Client/Project
BFI WASTE SYSTEMS OF NORTH AMERICA, LLC
PINE BEND LANDFILL

2022 MAJOR PERMIT MODIFICATIOON

INVER GROVE HEIGHTS, MINNESOTA

Existing Conditions Map (West Half)

Permit-Seal
I HEREBY CERTIFY THAT THIS PLAN, SPECIFICATION, OR REPORT WAS PREPARED BY ME OR UNDER MY DIRECT SUPERVISION AND THAT I AM A DULY LICENSED PROFESSIONAL ENGINEER UNDER THE LAWS OF THE STATE OF MINNESOTA.

PRINT NAME THOMAS J. SHUSTARICH
SIGNATURE
DATE yy/mm/dd LICENSE # 21210

Project Number: 227704791
04791e_sp_02a.dgn

JWT 2022.02.25

Drawing No. 2A
Revision 0
Sheet 3 of 18

U:\227704791\cadfiles\04791e_sp_02a.dgn
By: jeffrey.tepfer

Stantec

Issued

By Appd. YY.MM.DD

Client/Project

BFI WASTE SYSTEMS OF NORTH AMERICA, LLC
PINE BEND LANDFILL

2022 MAJOR PERMIT MODIFICATIOON

INVER GROVE HEIGHTS, MINNESOTA

Phasing Plan

Permit-Seal

I HEREBY CERTIFY THAT THIS PLAN, SPECIFICATION, OR REPORT WAS PREPARED BY ME OR UNDER MY DIRECT SUPERVISION AND THAT I AM A DULY LICENSED PROFESSIONAL ENGINEER UNDER THE LAWS OF THE STATE OF MINNESOTA.

PRINT NAME THOMAS J. SHUSTARICH

SIGNATURE

DATE yy/mm/dd LICENSE # 21210

Project Number: 227704791

04791e_pp_03.dgn

JW1 2022.02.28

Drawing No. 3

Revision 0

Sheet 3 of 18

U:\227704791\drafting\04791e_pp_03.dgn
By: jeffrey.tepfer

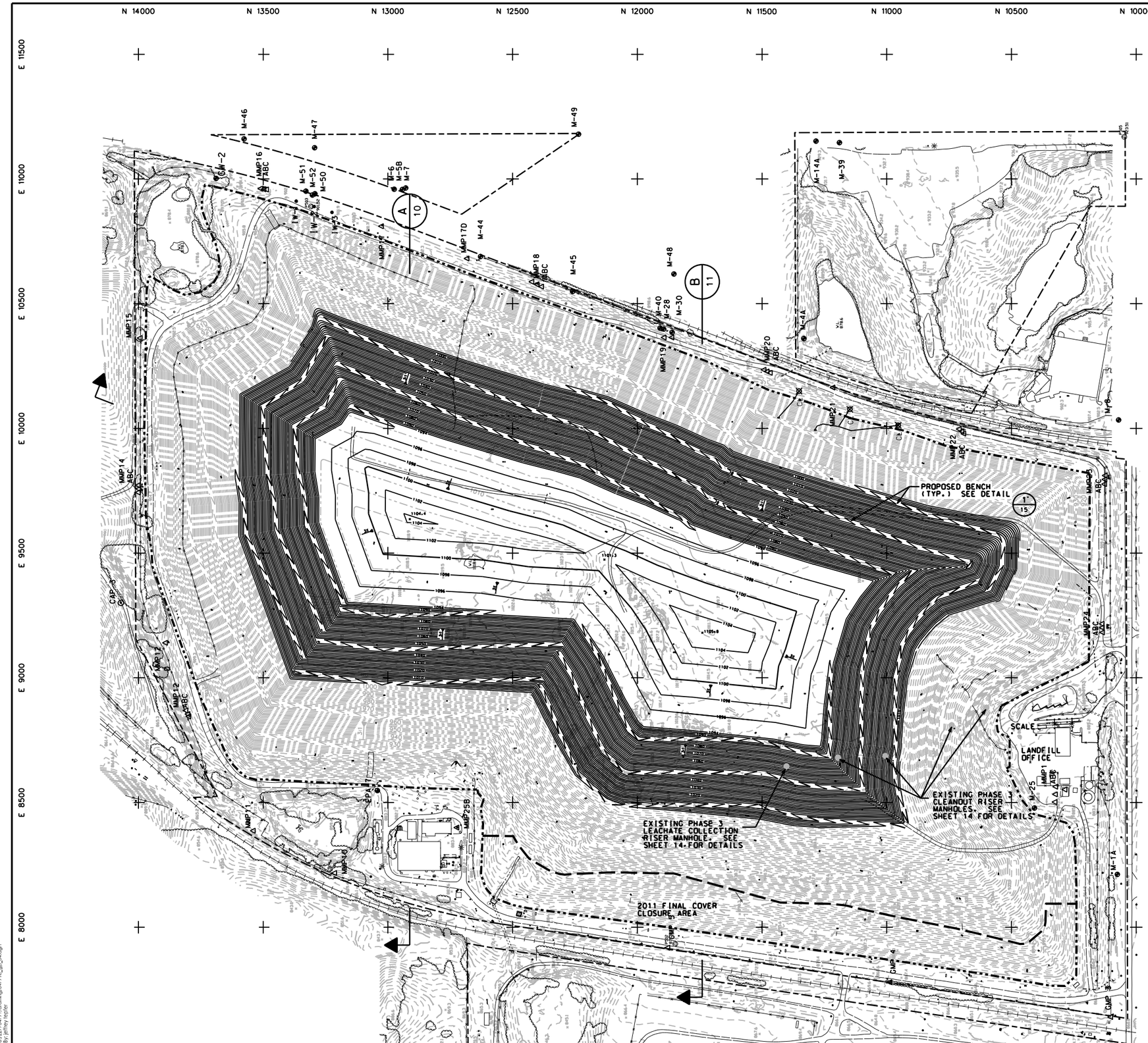

LEGEND

- EXISTING CONTOURS
- EXISTING TREELINE
- EXISTING FENCELINE
- EXISTING RAILROAD
- EXISTING POLE
- EXISTING PROPERTY LINE
- EXISTING GROUNDWATER MONITORING WELL
- EXISTING METHANE MONITORING PROBE
- EXISTING METHANE MONITORING PROBE
- EXISTING GROUNDWATER INJECTION WELL
- EXISTING WASTE BOUNDARY
- CLOSURE BOUNDARY
- FUTURE FINAL COVER CONTOURS
- PROPOSED FINAL COVER CONTOURS

NOTE:
EXISTING CONDITIONS PROVIDED BY
COOPER AERIAL SURVEYS CO.
DATE OF FLIGHT DECEMBER 19, 2021.

Stantec

Issued

By Appd. YY.MM.DD

Client/Project
BFI WASTE SYSTEMS OF NORTH AMERICA, LLC
PINE BEND LANDFILL

2022 MAJOR PERMIT MODIFICATIOON

INVER GROVE HEIGHTS, MINNESOTA

Phase 7 Vertical Expansion Final Cover Grading Plan

Permit-Seal

I HEREBY CERTIFY THAT THIS PLAN, SPECIFICATION, OR REPORT WAS PREPARED BY ME OR UNDER MY DIRECT SUPERVISION AND THAT I AM A DULY LICENSED PROFESSIONAL ENGINEER UNDER THE LAWS OF THE STATE OF MINNESOTA.

PRINT NAME THOMAS J. SHUSTARICH

SIGNATURE

DATE yy/mm/dd LICENSE # 21210

Project Number: 227704791

04791e_gp_04.dgn

JW1 2022.02.28

Drawing No. 4

Revision 0

Sheet 4 of 18

U:\227704791\drafting\04791e_gp_04.dgn
By: jeffrey.tepfer

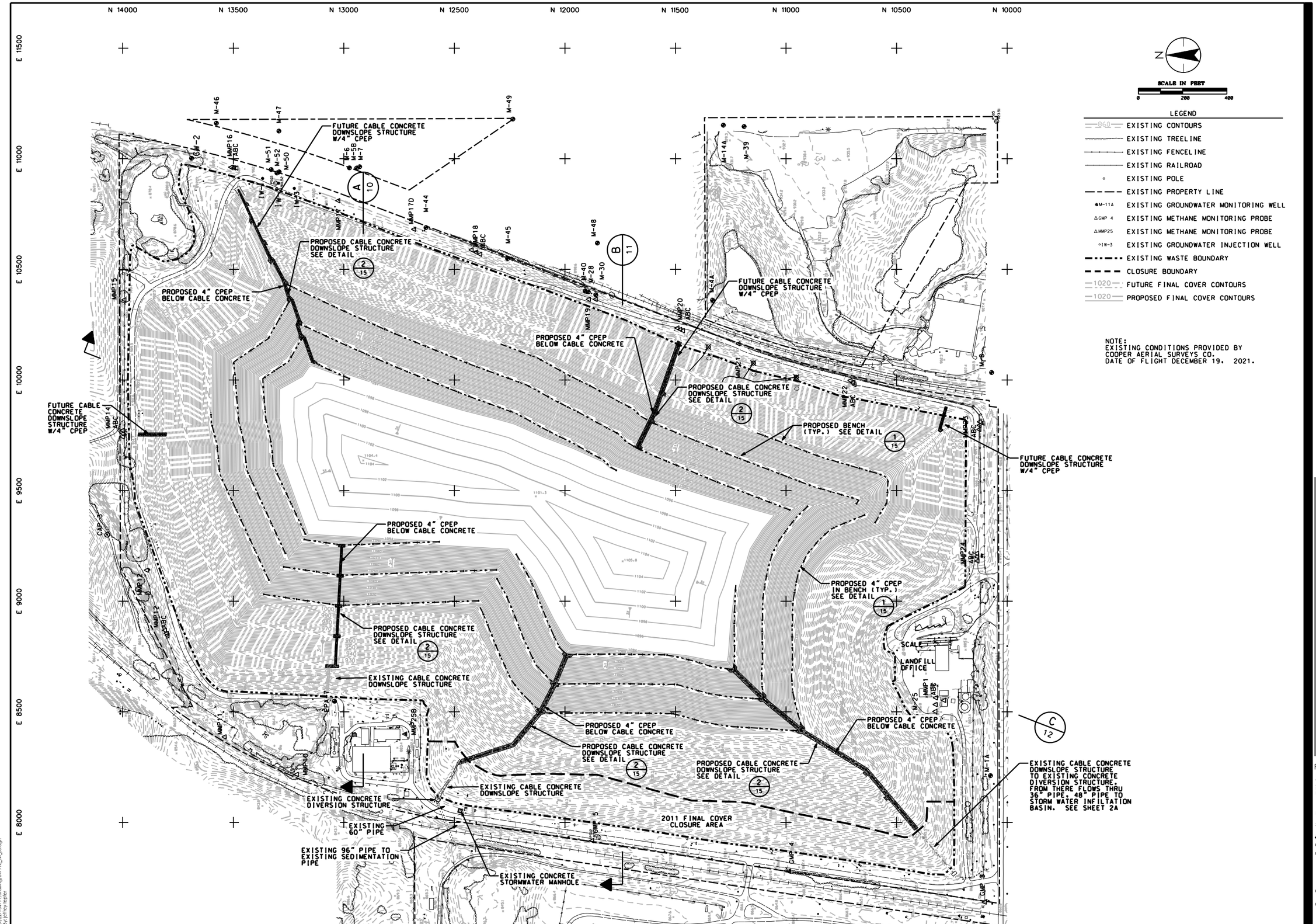

LEGEND

- EXISTING CONTOURS
- EXISTING TREELINE
- EXISTING FENCELINE
- EXISTING RAILROAD
- EXISTING POLE
- EXISTING PROPERTY LINE
- EXISTING GROUNDWATER MONITORING WELL
- EXISTING METHANE MONITORING PROBE
- EXISTING METHANE MONITORING PROBE
- EXISTING GROUNDWATER INJECTION WELL
- EXISTING WASTE BOUNDARY
- CLOSURE BOUNDARY
- FUTURE FINAL COVER CONTOURS
- PROPOSED FINAL COVER CONTOURS

NOTE:
EXISTING CONDITIONS PROVIDED BY COOPER AERIAL SURVEYS CO. DATE OF FLIGHT DECEMBER 19, 2021.

Stantec

Issued	By	Appd.	YY.MM.DD

Client/Project
BFI WASTE SYSTEMS OF NORTH AMERICA, LLC
PINE BEND LANDFILL

2022 MAJOR PERMIT MODIFICATIOON

INVER GROVE HEIGHTS, MINNESOTA

Phase 7 Vertical Expansion Surface Water Management Plan

Permit-Seal

I HEREBY CERTIFY THAT THIS PLAN, SPECIFICATION, OR REPORT WAS PREPARED BY ME OR UNDER MY DIRECT SUPERVISION AND THAT I AM A DULY LICENSED PROFESSIONAL ENGINEER UNDER THE LAWS OF THE STATE OF MINNESOTA.

PRINT NAME THOMAS J. SHUSTARICH

SIGNATURE

DATE yy/mm/dd LICENSE # 21210

Project Number: 227704791

04791e_sw_05.dgn

JWT 2022.03.11

Drawing No. 5

Revision 0

Sheet 5 of 18

U:\227704791\cadfiles\04791e_sw_05.dgn
By: jeffrey.tepler

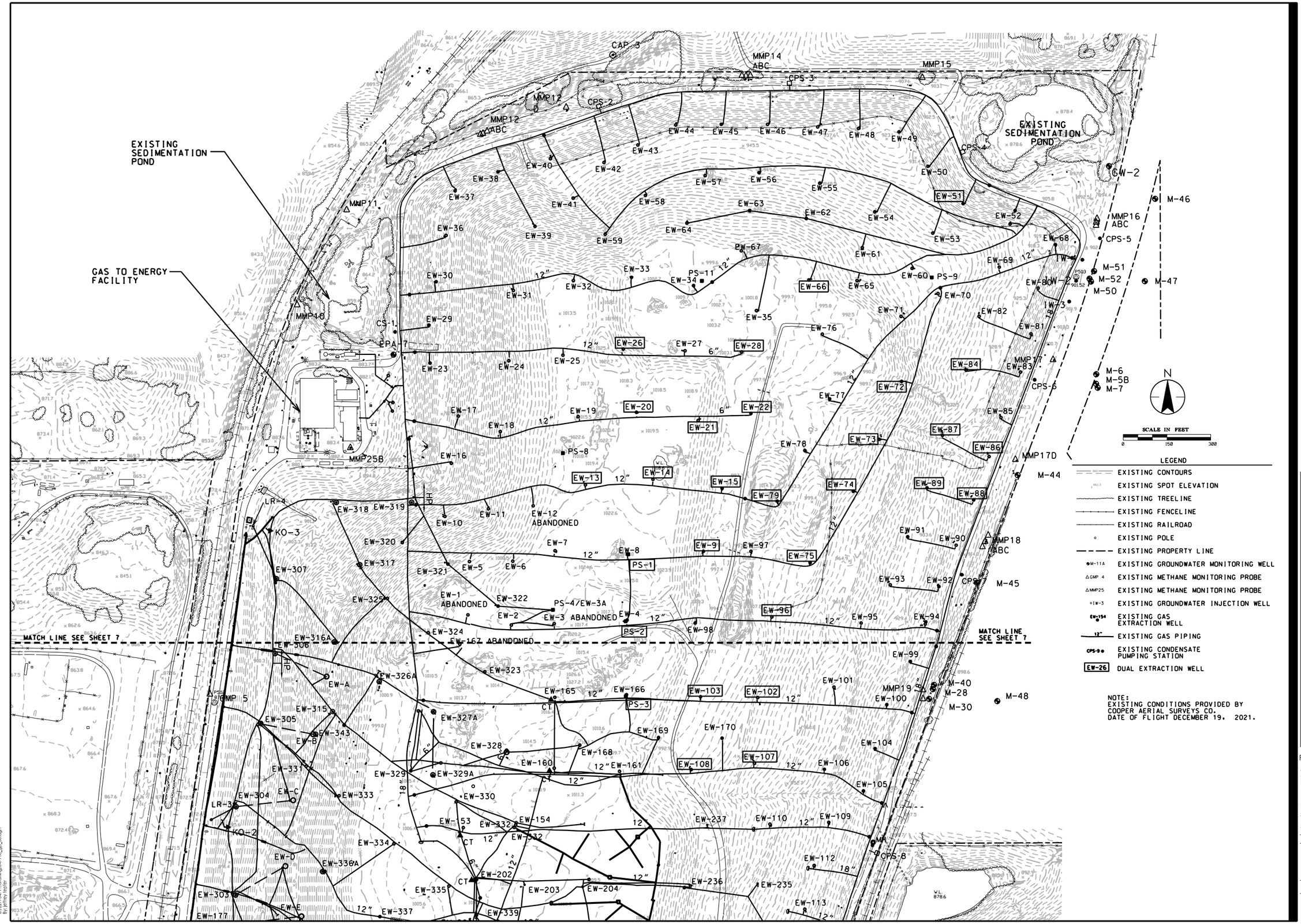

LEGEND

- EXISTING CONTOURS
- EXISTING SPOT ELEVATION
- EXISTING TREELINE
- EXISTING FENCELINE
- EXISTING RAILROAD
- EXISTING POLE
- EXISTING PROPERTY LINE
- M-11A EXISTING GROUNDWATER MONITORING WELL
- GMP 4 EXISTING METHANE MONITORING PROBE
- MMP25 EXISTING METHANE MONITORING PROBE
- IW-3 EXISTING GROUNDWATER INJECTION WELL
- EW-154 EXISTING GAS EXTRACTION WELL
- 12" EXISTING GAS PIPING
- CPS-9 EXISTING CONDENSATE PUMPING STATION
- EW-26 DUAL EXTRACTION WELL

NOTE:
EXISTING CONDITIONS PROVIDED BY COOPER AERIAL SURVEYS CO.
DATE OF FLIGHT DECEMBER 19, 2021.

Stantec

Issued	By	Appd.	YY.MM.DD

Client/Project
BFI WASTE SYSTEMS OF NORTH AMERICA, LLC
PINE BEND LANDFILL

2022 MAJOR PERMIT MODIFICATIOON

INVER GROVE HEIGHTS, MINNESOTA

Existing Gas Piping Plan - North Half

Permit-Seal

I HEREBY CERTIFY THAT THIS PLAN, SPECIFICATION, OR REPORT WAS PREPARED BY ME OR UNDER MY DIRECT SUPERVISION AND THAT I AM A DULY LICENSED PROFESSIONAL ENGINEER UNDER THE LAWS OF THE STATE OF MINNESOTA.

PRINT NAME THOMAS J. SHUSTARRICH

SIGNATURE

DATE yy/mm/dd LICENSE # 21210

Project Number: 227704791

04791e_gp_06.dgn

JWT 2022.03.11

Drawing No. 6

Revision 0

Sheet 6 of 18

U:\227704791\cadfiles\04791e_gp_06.dgn
By: jeffrey.tepler

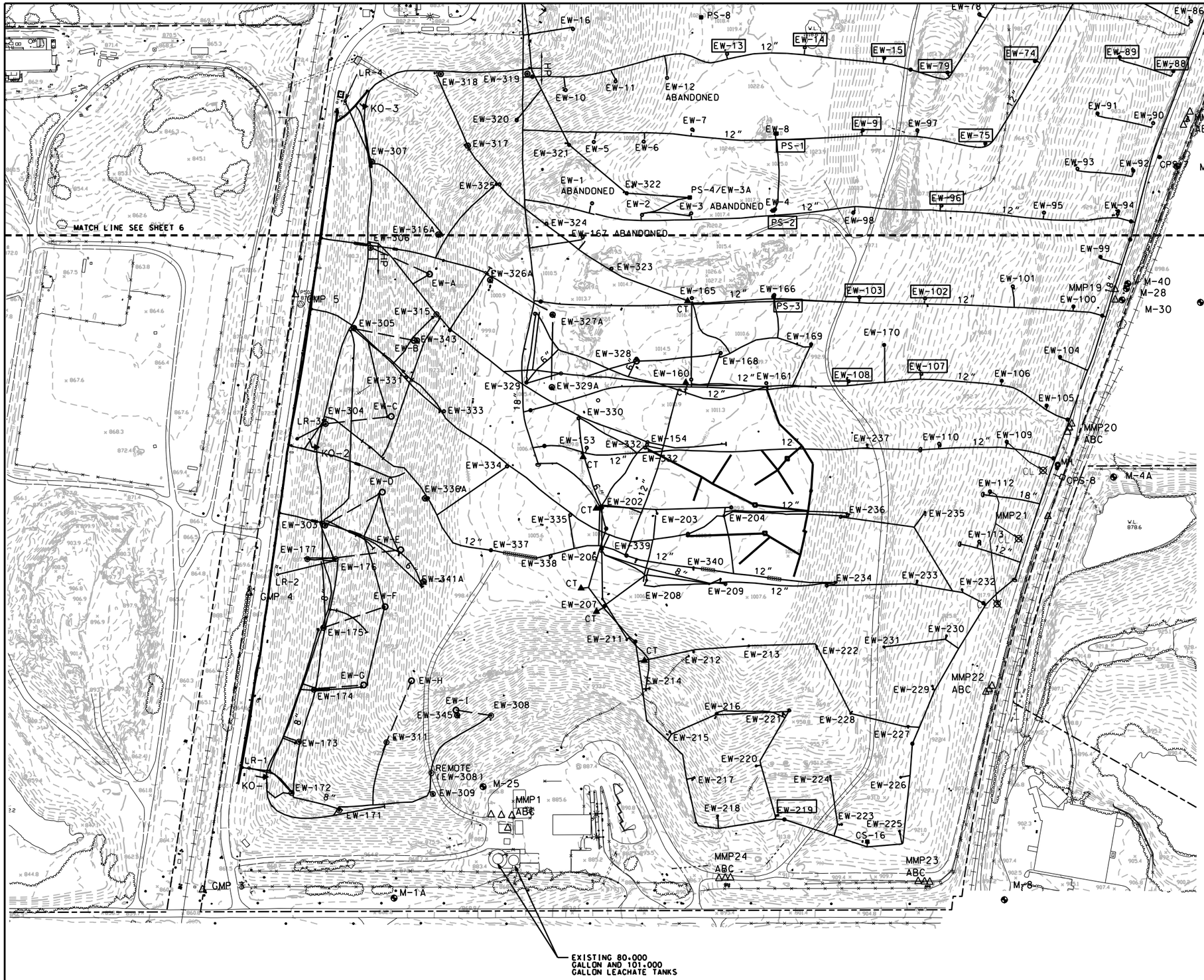

N

SCALE IN FEET

0 150 300

LEGEND

- EXISTING CONTOURS
- EXISTING SPOT ELEVATION
- EXISTING TREELINE
- EXISTING FENCELINE
- EXISTING RAILROAD
- EXISTING POLE
- EXISTING PROPERTY LINE
- M-11A EXISTING GROUNDWATER MONITORING WELL
- GMP 4 EXISTING METHANE MONITORING PROBE
- MMP25 EXISTING METHANE MONITORING PROBE
- IW-3 EXISTING GROUNDWATER INJECTION WELL
- EW-154 EXISTING GAS EXTRACTION WELL
- 12" EXISTING GAS PIPING
- CPS-9 EXISTING CONDENSATE PUMPING STATION
- EW-26 DUAL EXTRACTION WELL

NOTE:
EXISTING CONDITIONS PROVIDED BY
COOPER AERIAL SURVEYS CO.
DATE OF FLIGHT DECEMBER 19, 2021

Stantec

Issued

By Appd. YY.MM.DD

Client/Project
BFI WASTE SYSTEMS OF NORTH AMERICA, LLC
PINE BEND LANDFILL

2022 MAJOR PERMIT MODIFICATIOON

INVER GROVE HEIGHTS, MINNESOTA

Existing Gas Piping Plan - South Half

Permit-Seal

I HEREBY CERTIFY THAT THIS PLAN, SPECIFICATION, OR REPORT WAS PREPARED BY ME OR UNDER MY DIRECT SUPERVISION AND THAT I AM A DULY LICENSED PROFESSIONAL ENGINEER UNDER THE LAWS OF THE STATE OF MINNESOTA.

PRINT NAME THOMAS J. SHUSTARICH

SIGNATURE

DATE yy/mm/dd LICENSE # 21210

Project Number: 227704791

04791e_gp_07.dgn

JWT 2022.03.11

Drawing No. 7

Revision 0

Sheet 7 of 18

U:\227704791\cadfiles\04791e_gp_07.dgn
By: jeffrey.tepler

HORIZONTAL COLLECTION SYSTEM TRENCH POINT	APPROXIMATE DEPTH (FT)
1	8
2	14
3	8
4	7
5	7
6	7
7	9
8	8

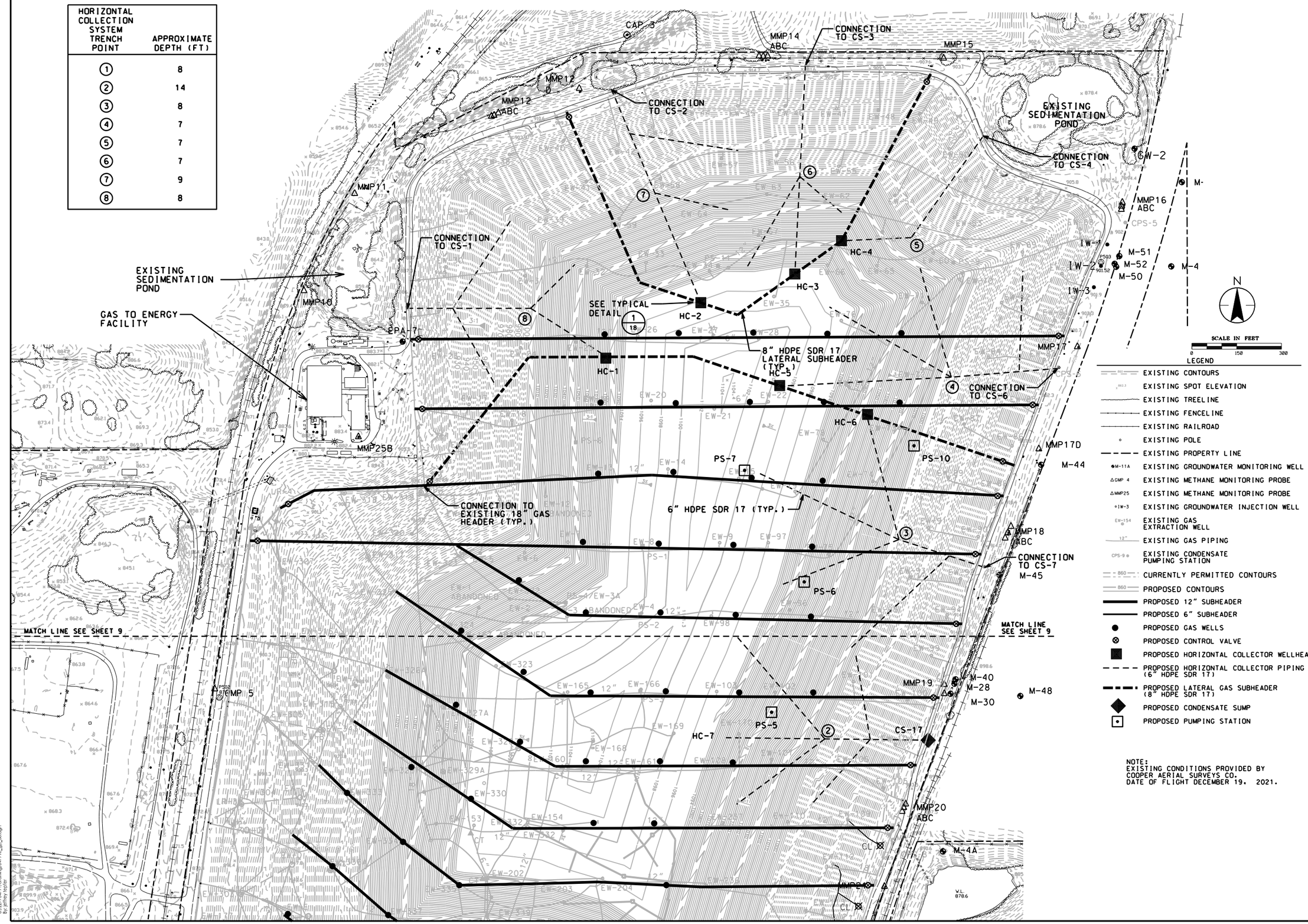

LEGEND

- EXISTING CONTOURS
- EXISTING SPOT ELEVATION
- EXISTING TREELINE
- EXISTING FENCELINE
- EXISTING RAILROAD
- EXISTING POLE
- EXISTING PROPERTY LINE
- EXISTING GROUNDWATER MONITORING WELL
- EXISTING METHANE MONITORING PROBE
- EXISTING METHANE MONITORING PROBE
- EXISTING GROUNDWATER INJECTION WELL
- EXISTING GAS EXTRACTION WELL
- EXISTING GAS PIPING
- EXISTING CONDENSATE PUMPING STATION
- CURRENTLY PERMITTED CONTOURS
- PROPOSED CONTOURS
- PROPOSED 12" SUBHEADER
- PROPOSED 6" SUBHEADER
- PROPOSED GAS WELLS
- PROPOSED CONTROL VALVE
- PROPOSED HORIZONTAL COLLECTOR WELLHEAD
- PROPOSED HORIZONTAL COLLECTOR PIPING (6" HDPE SDR 17)
- PROPOSED LATERAL GAS SUBHEADER (8" HDPE SDR 17)
- PROPOSED CONDENSATE SUMP
- PROPOSED PUMPING STATION

NOTE:
EXISTING CONDITIONS PROVIDED BY COOPER AERIAL SURVEYS CO.
DATE OF FLIGHT DECEMBER 19, 2021.

Stantec

Issued

By | Appd. | YY.MM.DD

Client/Project
BFI WASTE SYSTEMS OF NORTH AMERICA, LLC
PINE BEND LANDFILL

2022 MAJOR PERMIT MODIFICATIOON

INVER GROVE HEIGHTS, MINNESOTA

Proposed Gas Piping Plan - North Half

Permit-Seal

I HEREBY CERTIFY THAT THIS PLAN, SPECIFICATION, OR REPORT WAS PREPARED BY ME OR UNDER MY DIRECT SUPERVISION AND THAT I AM A DULY LICENSED PROFESSIONAL ENGINEER UNDER THE LAWS OF THE STATE OF MINNESOTA.

PRINT NAME THOMAS J. SHUSTARICH

SIGNATURE

DATE yy/mm/dd LICENSE # 21210

Project Number: 227704791

04791e_gp_08.dgn

JWT 2022.03.11

Drawing No. 8

Revision 0

Sheet 8 of 18

U:\227704791\cadfiles\04791e_gp_08.dgn
By: jeffrey.tepler

HORIZONTAL COLLECTION SYSTEM TRENCH POINT	APPROXIMATE DEPTH (FT)
1	8
2	14
3	8
4	7
5	7
6	7
7	9
8	8

LEGEND

- EXISTING CONTOURS
- EXISTING SPOT ELEVATION
- EXISTING TREELINE
- EXISTING FENCELINE
- EXISTING RAILROAD
- EXISTING POLE
- EXISTING PROPERTY LINE
- M-11A EXISTING GROUNDWATER MONITORING WELL
- GMP 4 EXISTING METHANE MONITORING PROBE
- MMP25 EXISTING METHANE MONITORING PROBE
- IW-3 EXISTING GROUNDWATER INJECTION WELL
- EW-154 EXISTING GAS EXTRACTION WELL
- EXISTING GAS PIPING
- CPS-9 EXISTING CONDENSATE PUMPING STATION
- 850 PROPOSED CONTOURS
- 18" PROPOSED 18" HEADER @ 3% MIN. SLOPE
- PROPOSED 12" SUBHEADER
- PROPOSED 6" SUBHEADER
- PROPOSED GAS WELLS
- PROPOSED CONTROL VALVE
- PROPOSED HORIZONTAL COLLECTOR WELLHEAD
- PROPOSED HORIZONTAL COLLECTOR PIPING (6" HDPE SDR 17)
- PROPOSED LATERAL GAS SUBHEADER (8" HDPE SDR 17)
- PROPOSED CONDENSATE SUMP
- PROPOSED PUMPING STATION

NOTE:
EXISTING CONDITIONS PROVIDED BY COOPER AERIAL SURVEYS CO.
DATE OF FLIGHT DECEMBER 19, 2021.

Stantec

Issued	By	Appd.	YY.MM.DD

Client/Project
BFI WASTE SYSTEMS OF NORTH AMERICA, LLC
PINE BEND LANDFILL

2022 MAJOR PERMIT MODIFICATIOON
INVER GROVE HEIGHTS, MINNESOTA
Proposed Gas Piping Plan - South Half

Permit-Seal
I HEREBY CERTIFY THAT THIS PLAN, SPECIFICATION, OR REPORT WAS PREPARED BY ME OR UNDER MY DIRECT SUPERVISION AND THAT I AM A DULY LICENSED PROFESSIONAL ENGINEER UNDER THE LAWS OF THE STATE OF MINNESOTA.

PRINT NAME THOMAS J. SHUSTARICH
SIGNATURE
DATE yy/mm/dd LICENSE # 21210

Project Number: 227704791
04791e_gp_09.dgn
JWT 2022.03.11

Drawing No. 9
Revision 0
Sheet 9 of 18

U:\227704791\drafting\04791e_gp_09.dgn
By: jeffrey.tepler

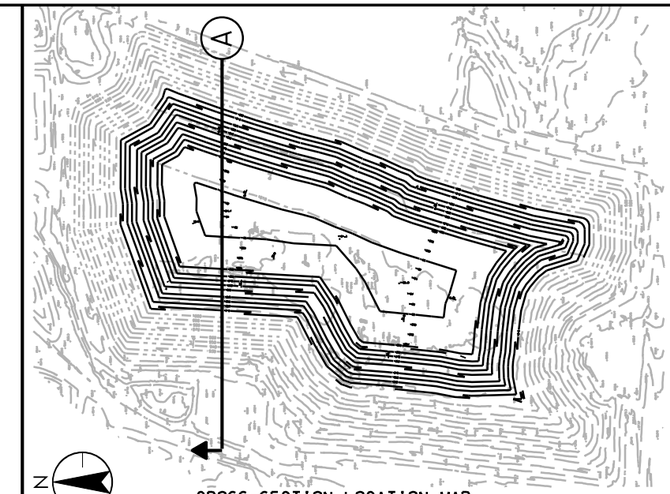

CROSS-SECTION LOCATION MAP
NOT TO SCALE

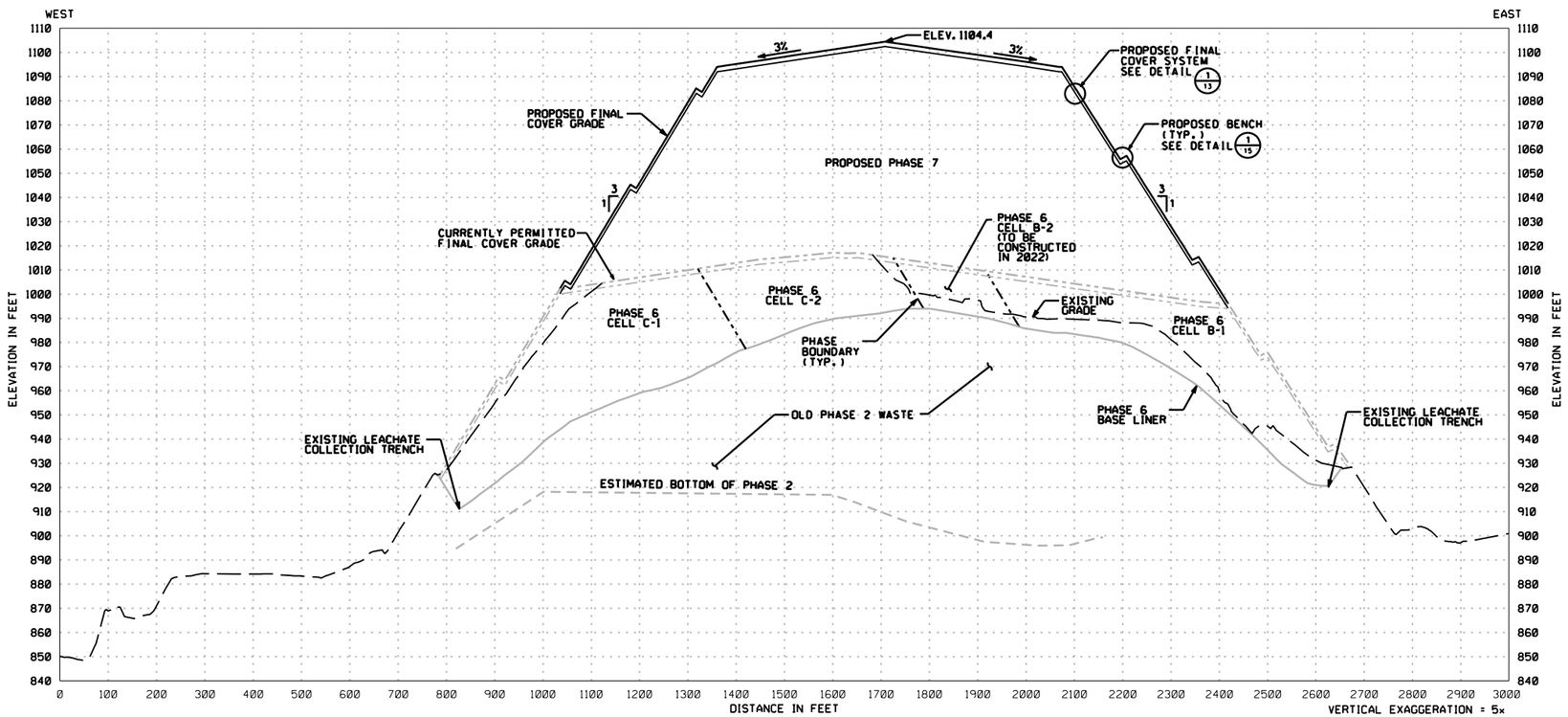

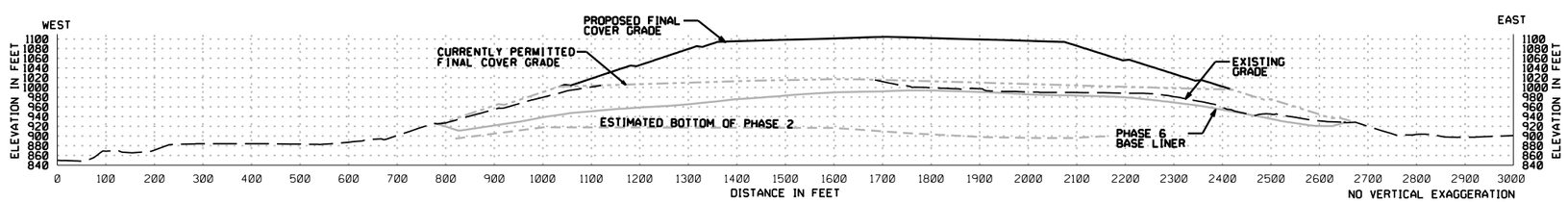

U:\227704791\cadfiles\04791e_xs_10.dgn
By: jeffrey.tepfer

Stantec

Issued	By	Appd.	YY.MM.DD

Client/Project
BFI WASTE SYSTEMS OF NORTH AMERICA, LLC
PINE BEND LANDFILL

2022 MAJOR PERMIT MODIFICATIOON

INVER GROVE HEIGHTS, MINNESOTA

Cross-section A

Permit-Seal

I HEREBY CERTIFY THAT THIS PLAN, SPECIFICATION, OR REPORT WAS PREPARED BY ME OR UNDER MY DIRECT SUPERVISION AND THAT I AM A DULY LICENSED PROFESSIONAL ENGINEER UNDER THE LAWS OF THE STATE OF MINNESOTA.

PRINT NAME THOMAS J. SHUSTARICH

SIGNATURE

DATE yy/mm/dd LICENSE # 21210

Project Number: 227704791

04791e_xs_10.dgn

JWT 2022.03.11

Drawing No. 10

Revision 0

Sheet 10of 18

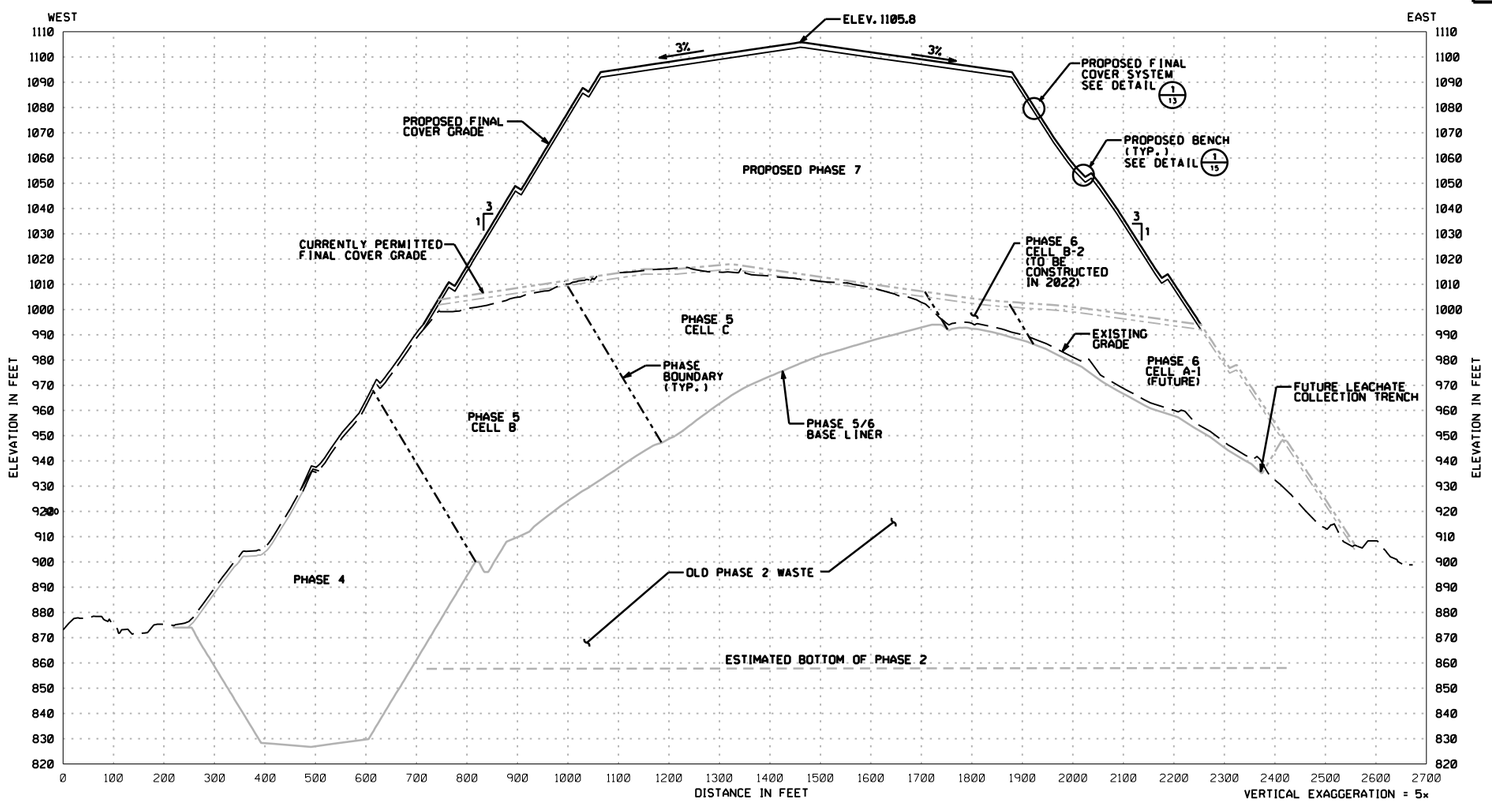

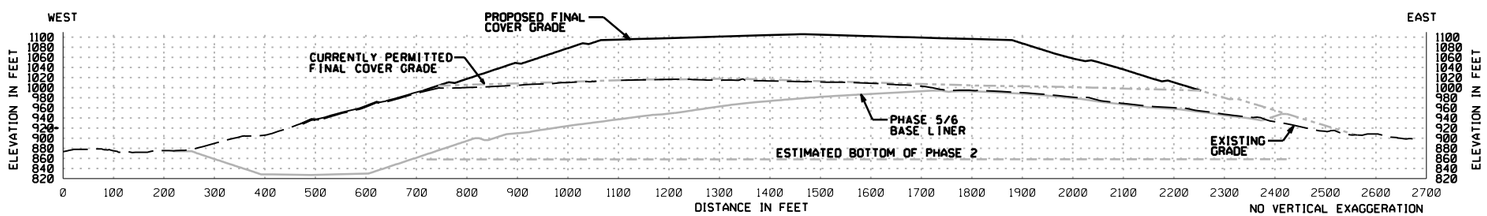

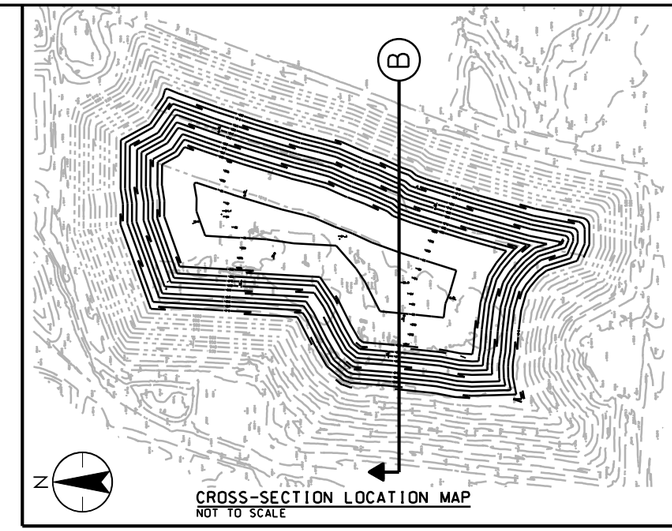

Stantec

Issued | By | Appd. | YY.MM.DD

Client/Project
BFI WASTE SYSTEMS OF NORTH AMERICA, LLC
PINE BEND LANDFILL

2022 MAJOR PERMIT MODIFICATIOON

INVER GROVE HEIGHTS, MINNESOTA

Cross-section B

Permit-Seal

I HEREBY CERTIFY THAT THIS PLAN, SPECIFICATION, OR REPORT WAS PREPARED BY ME OR UNDER MY DIRECT SUPERVISION AND THAT I AM A DULY LICENSED PROFESSIONAL ENGINEER UNDER THE LAWS OF THE STATE OF MINNESOTA.

PRINT NAME THOMAS J. SHUSTARICH

SIGNATURE

DATE yy/mm/dd LICENSE # 21210

Project Number: 227704791

04791e_xs_11.dgn

JWT 2022.03.11

Drawing No. 11

Revision 0

Sheet 11 of 18

U:\227704791\drafting\04791e_xs_11.dgn
By: jeffrey.tepfer

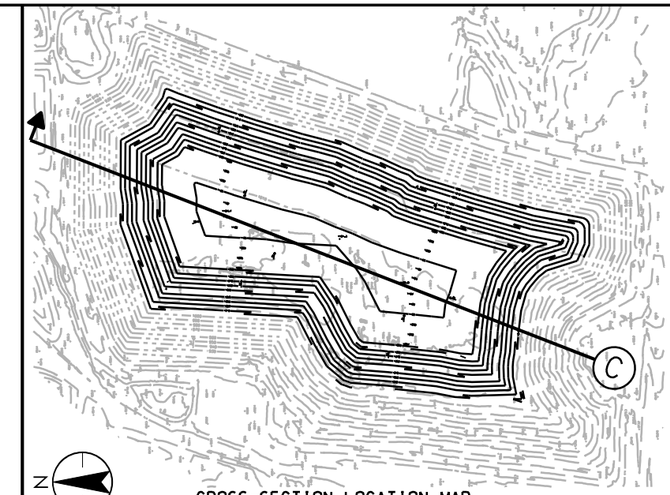

CROSS-SECTION LOCATION MAP
NOT TO SCALE

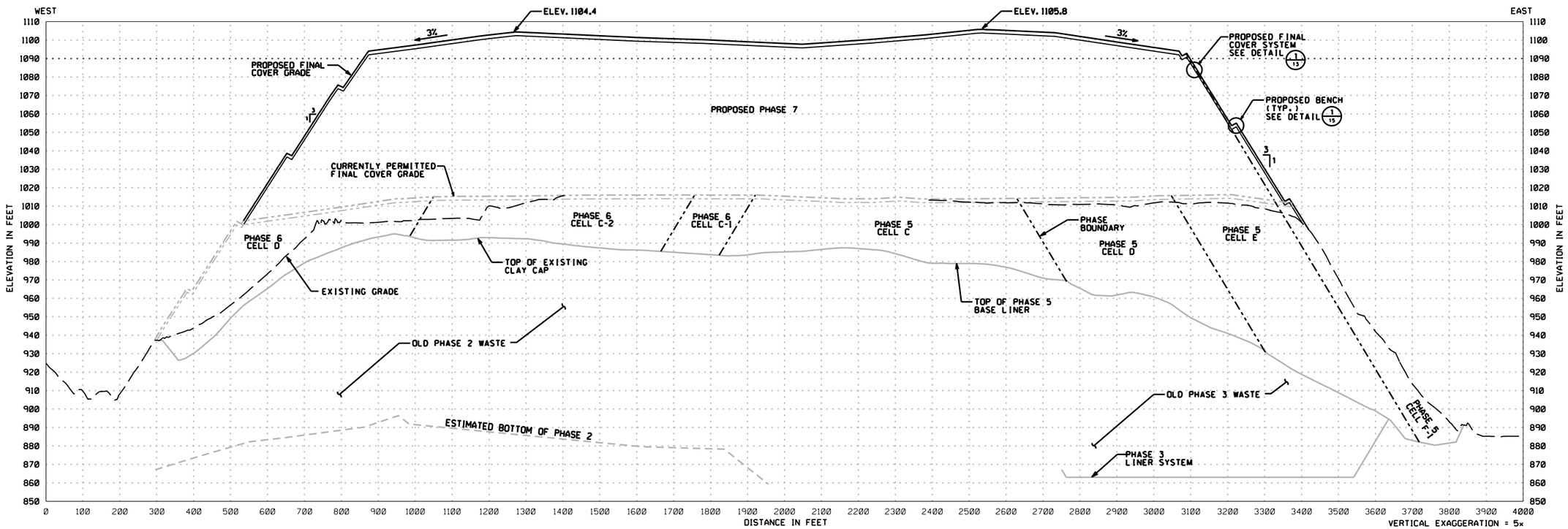

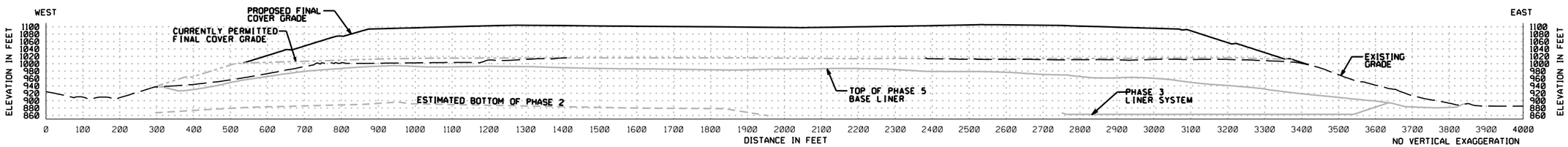

Stantec

Issued | By | Appd. | YY.MM.DD

Client/Project
BFI WASTE SYSTEMS OF NORTH AMERICA, LLC
PINE BEND LANDFILL

2022 MAJOR PERMIT MODIFICATIOON

INVER GROVE HEIGHTS, MINNESOTA

Cross-section C

Permit-Seal

I HEREBY CERTIFY THAT THIS PLAN, SPECIFICATION, OR REPORT WAS PREPARED BY ME OR UNDER MY DIRECT SUPERVISION AND THAT I AM A DULY LICENSED PROFESSIONAL ENGINEER UNDER THE LAWS OF THE STATE OF MINNESOTA.

PRINT NAME THOMAS J. SHUSTARICH

SIGNATURE

DATE yy/mm/dd LICENSE # 21210

Project Number: 227704791

04791e_xs_12.dgn

JWT 2022.03.11

Drawing No. 12

Revision 0

Sheet 12 of 18

U:\227704791\drafting\04791e_xs_12.dgn
By: jeffrey.tepfer

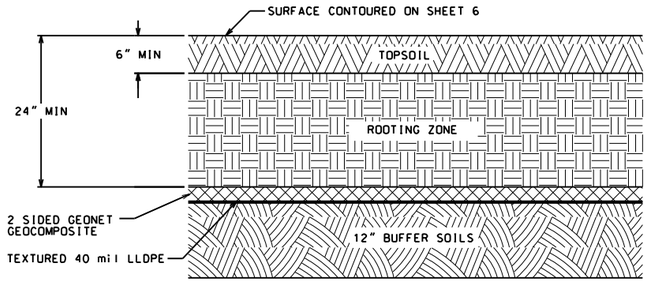

FINAL COVER SECTION 1/18

SCALE IN FEET
0 1 2

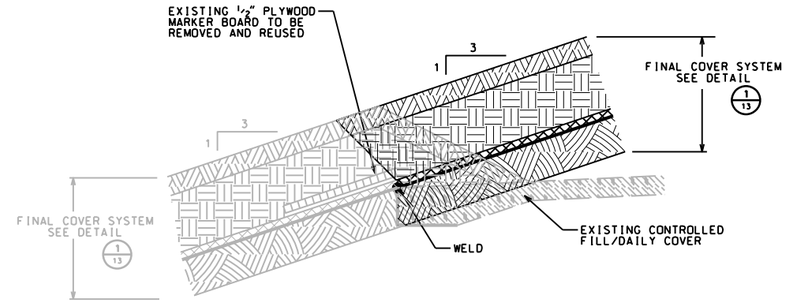

VERTICAL EXPANSION
TIE-IN TO EXISTING FINAL COVER 2/13

SCALE IN FEET
0 2 4

Stantec

Issued	By	Appd.	YY.MM.DD

Client/Project
BFI WASTE SYSTEMS OF NORTH AMERICA, LLC
PINE BEND LANDFILL

2022 MAJOR PERMIT MODIFICATION

INVER GROVE HEIGHTS, MINNESOTA

Liner System Details

Permit-Seal

I HEREBY CERTIFY THAT THIS PLAN, SPECIFICATION, OR REPORT WAS PREPARED BY ME OR UNDER MY DIRECT SUPERVISION AND THAT I AM A DULY LICENSED PROFESSIONAL ENGINEER UNDER THE LAWS OF THE STATE OF MINNESOTA.

PRINT NAME THOMAS J. SHUSTARICH

SIGNATURE

DATE yy/mm/dd LICENSE # 21210

Project Number: 227704791

04791e_sd_13.dgn

JWT 2022.03.14

Drawing No. 13

Revision 0

Sheet 13 of 18

U:\227704791\cadfiles\04791e_sd_13.dgn
By: jeffrey.tepler

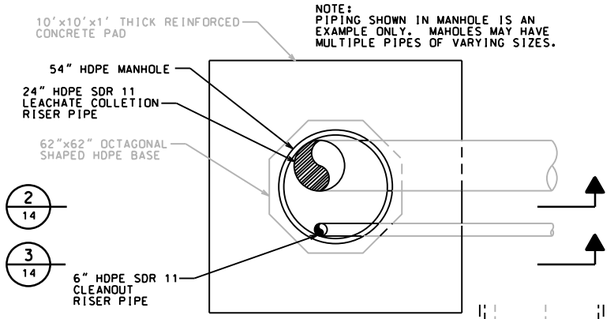

PLAN 1 14

SCALE IN FEET 0 3 6

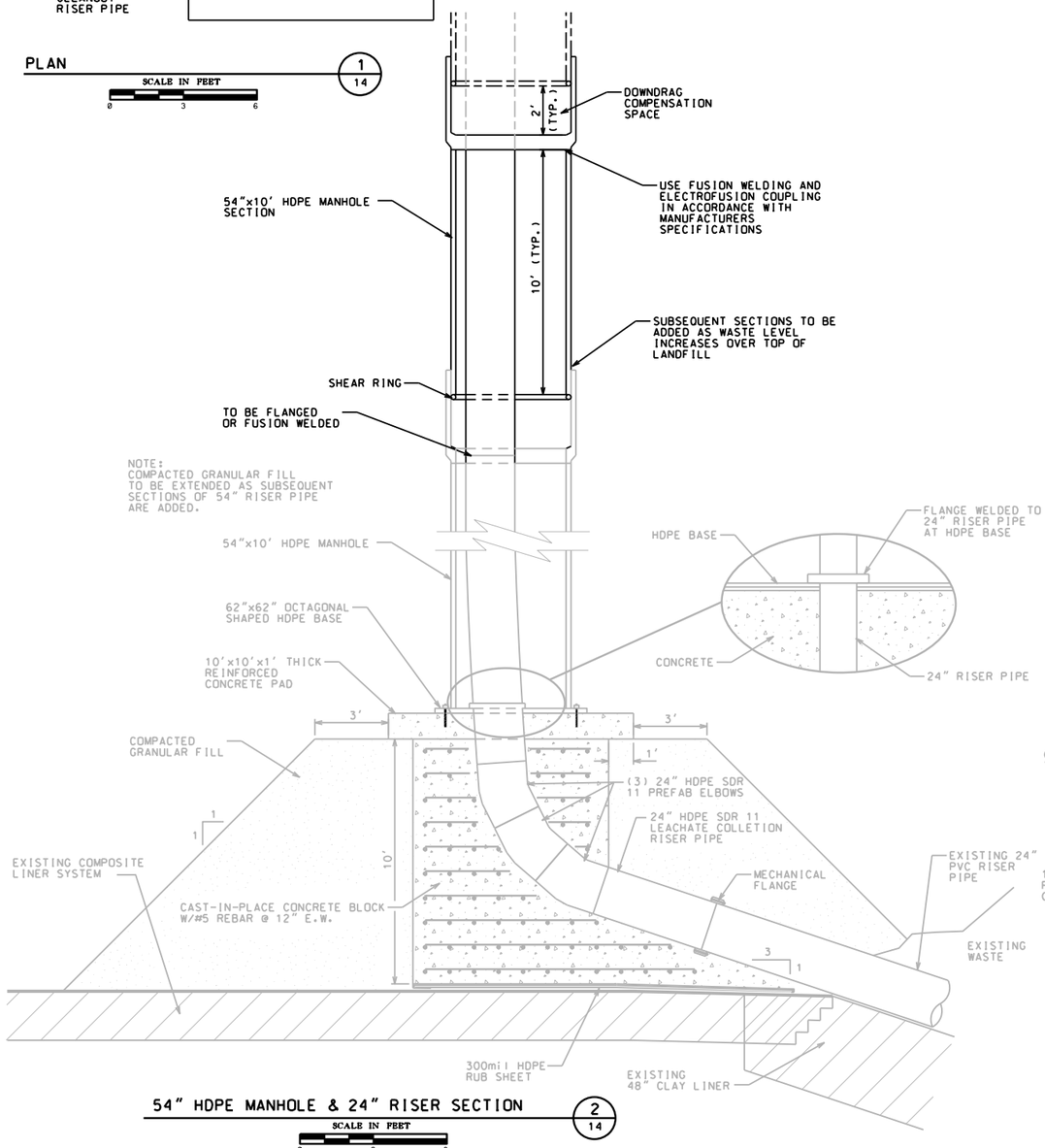

54" HDPE MANHOLE & 24" RISER SECTION 2 14

SCALE IN FEET 0 3 6

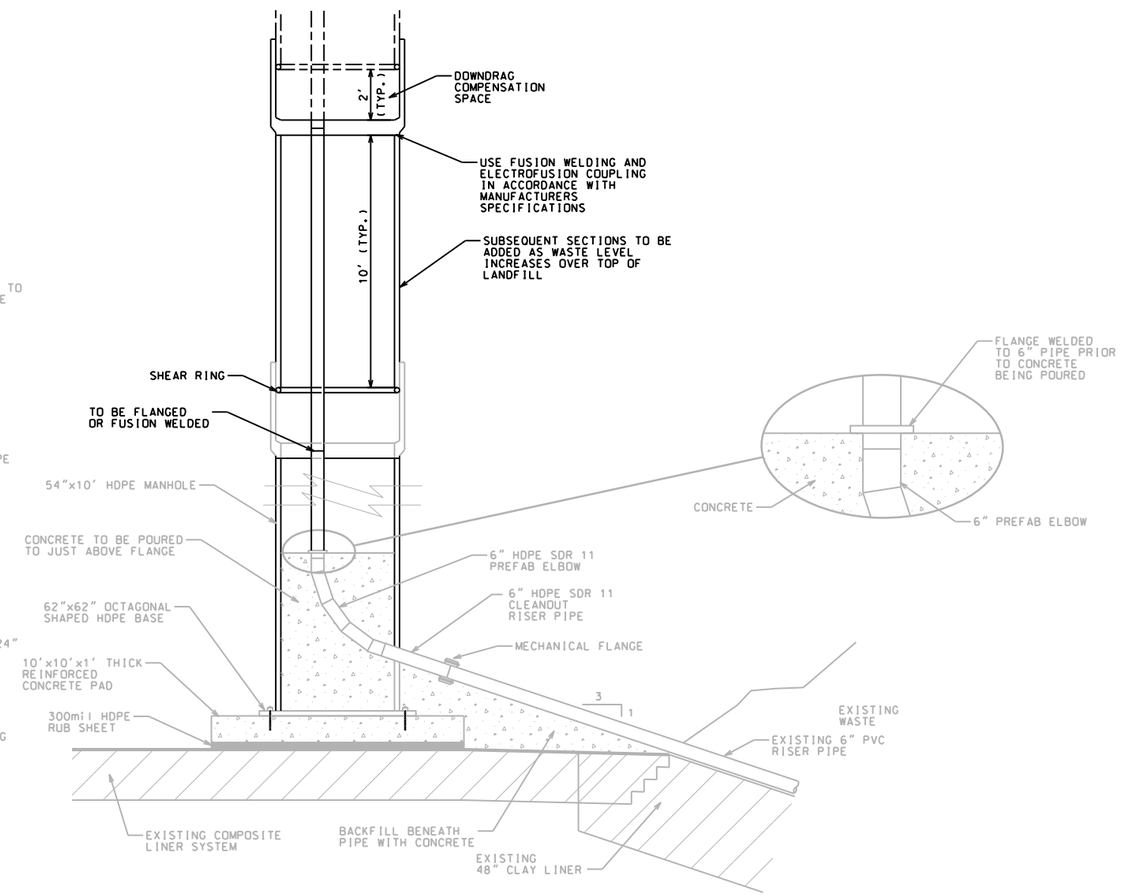

54" HDPE MANHOLE & LEACHATE CLEANOUT RISER SECTION 3 14

SCALE IN FEET 0 3 6

Stantec

Issued	By:	Appd:	YY.MM.DD

Client/Project
BFI WASTE SYSTEMS OF NORTH AMERICA, LLC
PINE BEND LANDFILL

2022 MAJOR PERMIT MODIFICATION

INVER GROVE HEIGHTS, MINNESOTA

Leachate Riser Manhole Details

Permit-Seal

I HEREBY CERTIFY THAT THIS PLAN, SPECIFICATION, OR REPORT WAS PREPARED BY ME OR UNDER MY DIRECT SUPERVISION AND THAT I AM A DULY LICENSED PROFESSIONAL ENGINEER UNDER THE LAWS OF THE STATE OF MINNESOTA.

PRINT NAME THOMAS J. SHUSTARICH

SIGNATURE

DATE yy/mm/dd LICENSE # 21210

Project Number: 227704791

04791e_sd_14.dgn

JWT 2022.03.14

Drawing No. 14

Revision 0

Sheet 14 of 18

U:\227704791\cadfiles\04791e_sd_14.dgn
By: jeffrey.tepler

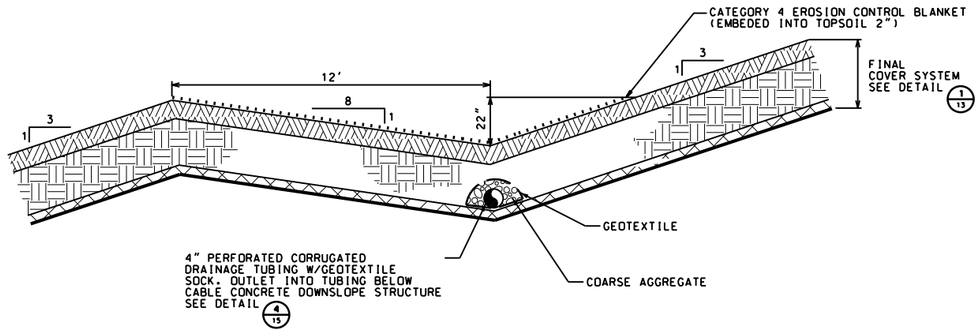

BENCH DETAIL 1/15

NOT TO SCALE

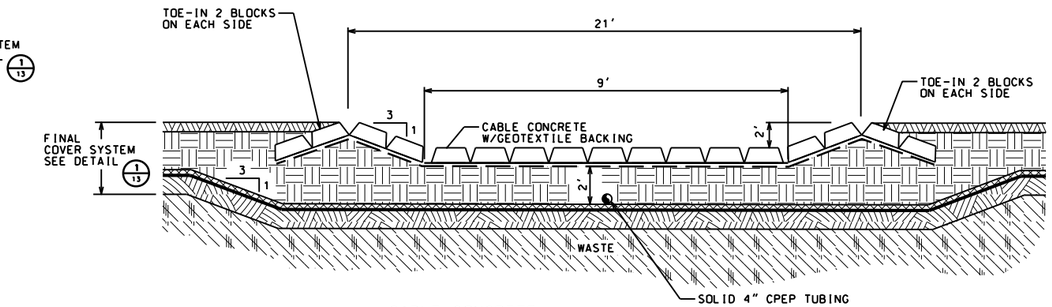

CABLE CONCRETE
DOWNSLOPE STRUCTURE SECTION 2/15

NOT TO SCALE

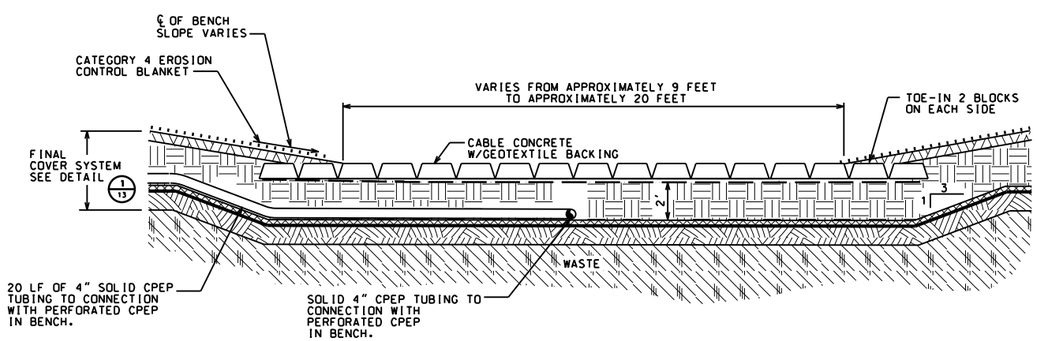

BENCH TO DOWNSLOPE
STRUCTURE SECTION 3/15

NOT TO SCALE

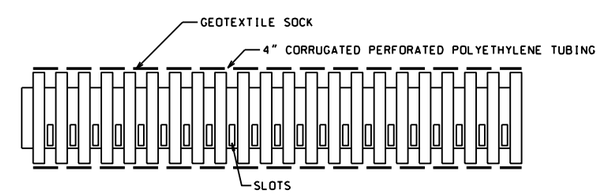

FINAL COVER DRAINAGE
COLLECTION PIPE PERFORATION 4/15

NOT TO SCALE

Stantec

Issued	By	Appd.	YY.MM.DD

Client/Project
BFI WASTE SYSTEMS OF NORTH AMERICA, LLC
PINE BEND LANDFILL

2022 MAJOR PERMIT MODIFICATION

INVER GROVE HEIGHTS, MINNESOTA

Surface Water Management Details

Permit-Seal

I HEREBY CERTIFY THAT THIS PLAN, SPECIFICATION, OR REPORT WAS PREPARED BY ME OR UNDER MY DIRECT SUPERVISION AND THAT I AM A DULY LICENSED PROFESSIONAL ENGINEER UNDER THE LAWS OF THE STATE OF MINNESOTA.

PRINT NAME THOMAS J. SHUSTARICH

SIGNATURE

DATE yy/mm/dd LICENSE # 21210

Project Number: 227704791

04791e_sd_15.dgn

JWT 2022.03.14

Drawing No. 15

Revision 0

Sheet 15 of 18

U:\227704791\cadfiles\04791e_sd_15.dgn
By: jeffrey.tepler

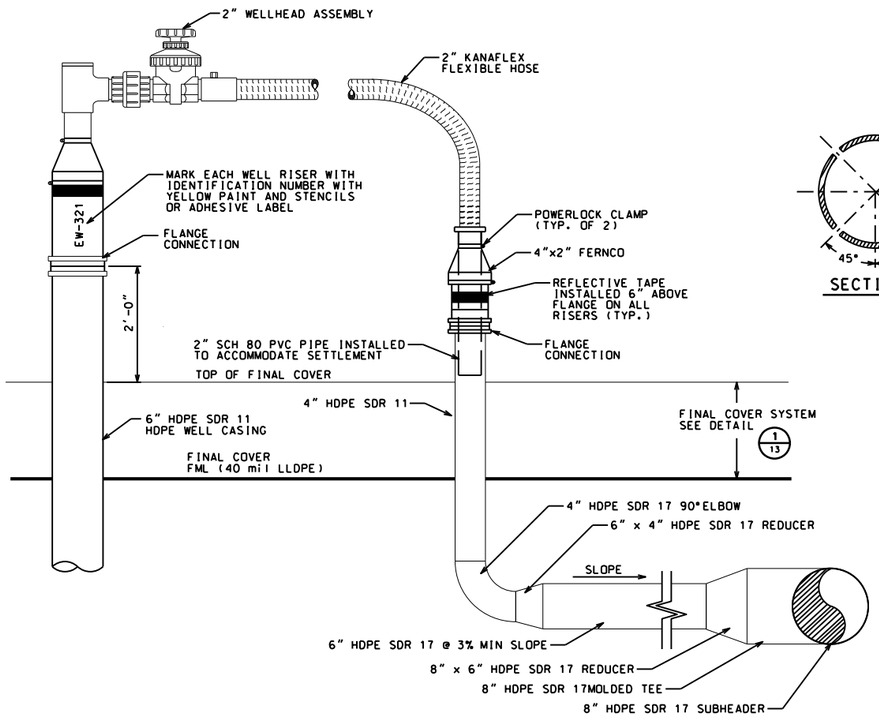

GAS EXTRACTION WELLHEAD AND CONNECTION TO SUBHEADER (1/16)
NOT TO SCALE

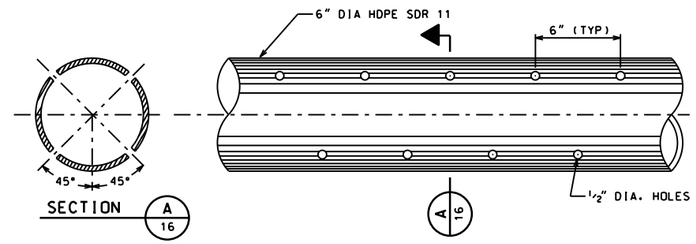

GAS WELL PIPE PERFORATION DETAIL (2/16)
NOT TO SCALE

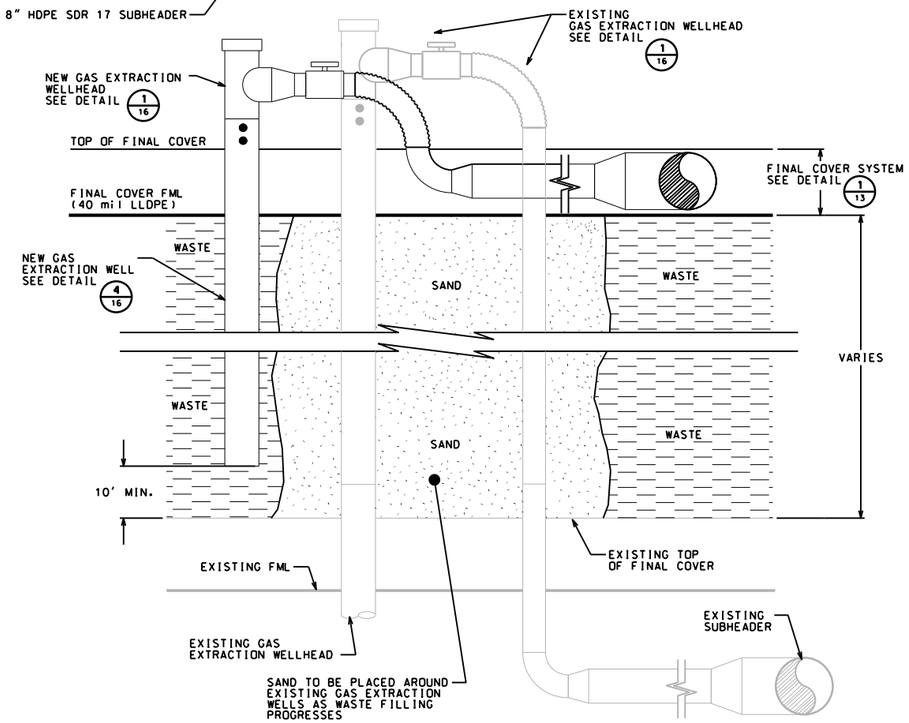

GAS EXTRACTION WELL EXTENSION DETAIL (3/16)
NOT TO SCALE

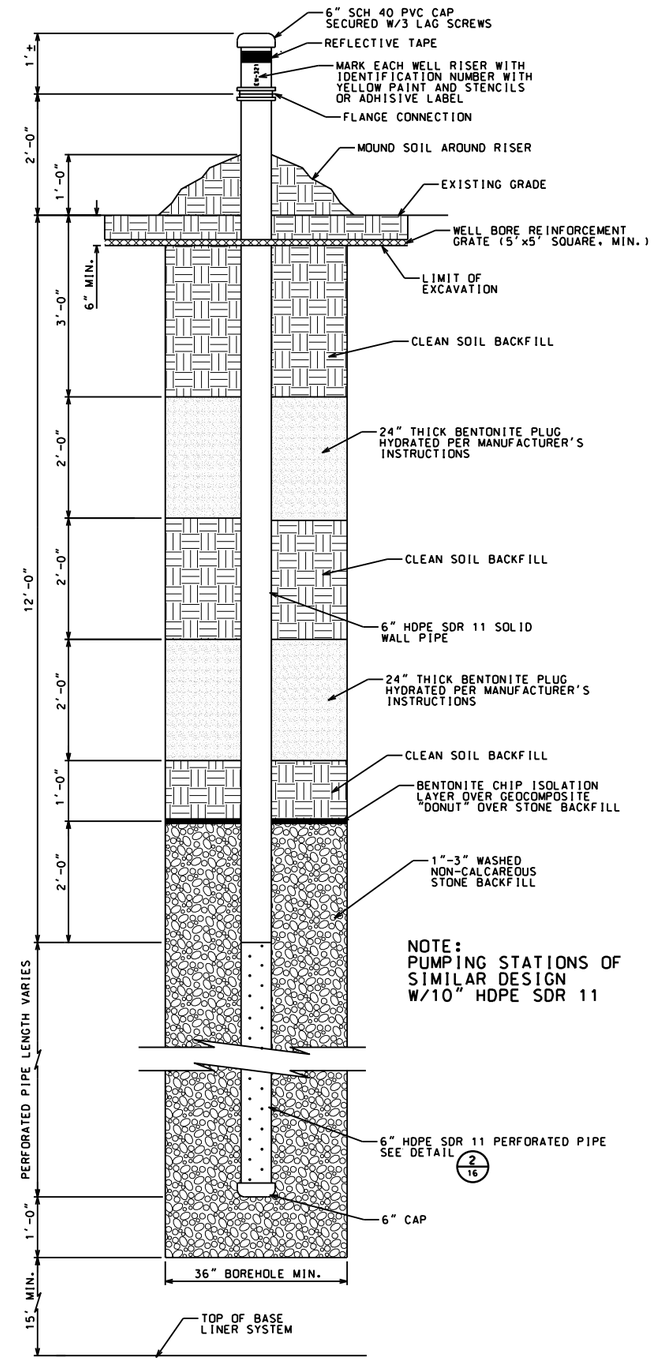

NOTE:
PUMPING STATIONS OF SIMILAR DESIGN W/10" HDPE SDR 11

LANDFILL GAS EXTRACTION WELL DETAIL (4/16)
NOT TO SCALE

Stantec

Issued	By	Appd.	YY.MM.DD

Client/Project
BFI WASTE SYSTEMS OF NORTH AMERICA, LLC
PINE BEND LANDFILL

2022 MAJOR PERMIT MODIFICATION

INVER GROVE HEIGHTS, MINNESOTA

Gas System Details

Permit-Seal
I HEREBY CERTIFY THAT THIS PLAN, SPECIFICATION, OR REPORT WAS PREPARED BY ME OR UNDER MY DIRECT SUPERVISION AND THAT I AM A DULY LICENSED PROFESSIONAL ENGINEER UNDER THE LAWS OF THE STATE OF MINNESOTA.

PRINT NAME THOMAS J. SHUSTARICH
SIGNATURE
DATE yy/mm/dd LICENSE # 21210

Project Number: 227704791
04791e_sd_16.dgn
JWT 2022.03.14

Drawing No. 16
Revision 0
Sheet 16 of 18

U:\227704791\cadfiles\04791e_sd_16.dgn
By: jeffrey.tepler

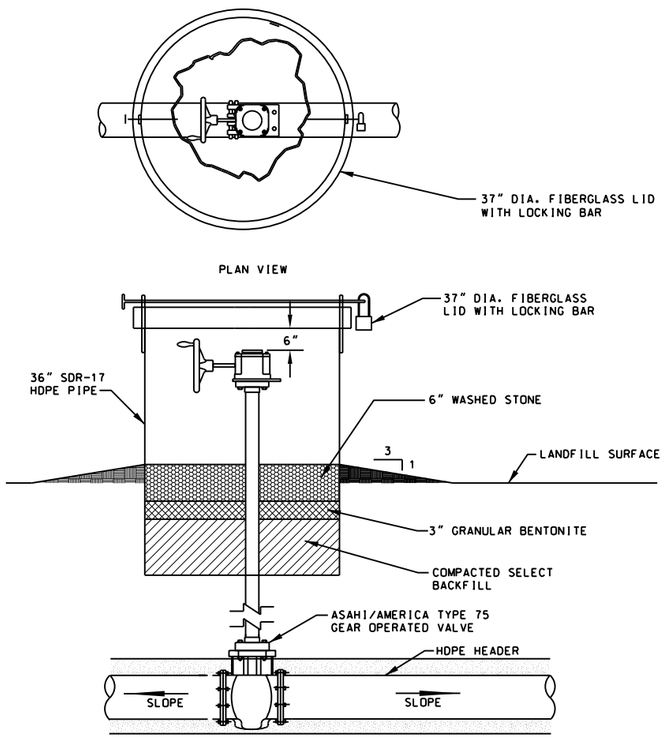

CONTROL VALVE DETAIL (GAS HEADER) 1/17
NOT TO SCALE

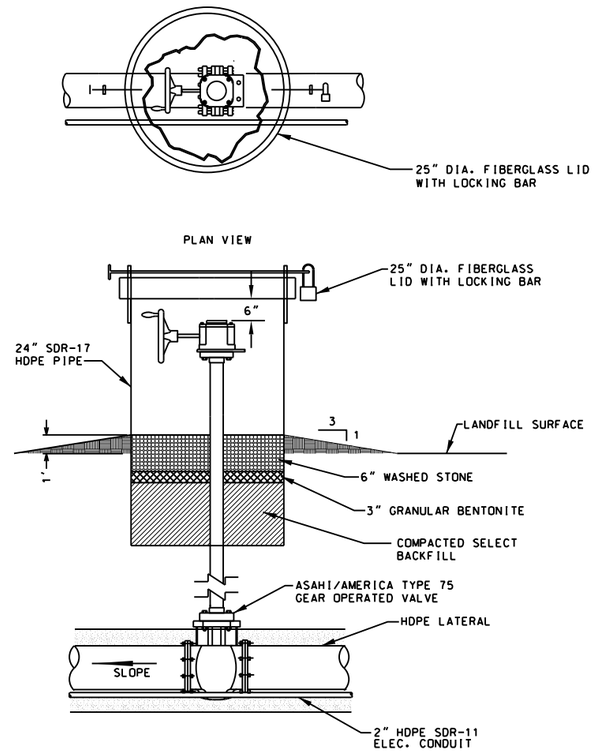

ISOLATION VALVE DETAIL (LATERAL) 2/17
NOT TO SCALE

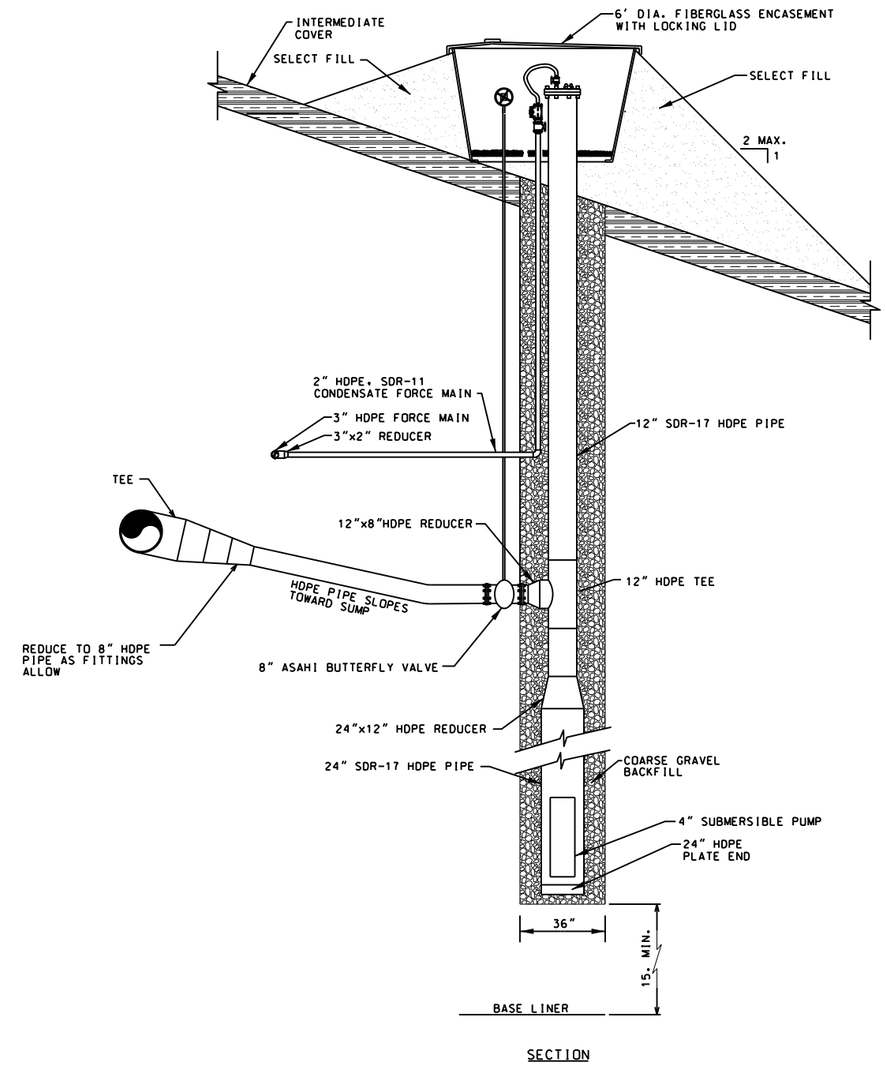

CONDENSATE SUMP DETAIL 3/17
NOT TO SCALE

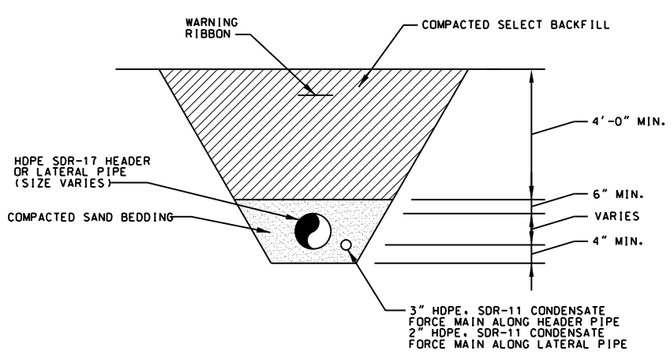

TYPICAL PIPE TRENCH DETAIL 4/17
NOT TO SCALE

Stantec

Issued	By	Appd.	YY.MM.DD

Client/Project
BFI WASTE SYSTEMS OF NORTH AMERICA, LLC
PINE BEND LANDFILL

2022 MAJOR PERMIT MODIFICATION

INVER GROVE HEIGHTS, MINNESOTA

Gas System Details

Permit-Seal

I HEREBY CERTIFY THAT THIS PLAN, SPECIFICATION, OR REPORT WAS PREPARED BY ME OR UNDER MY DIRECT SUPERVISION AND THAT I AM A DULY LICENSED PROFESSIONAL ENGINEER UNDER THE LAWS OF THE STATE OF MINNESOTA.

PRINT NAME THOMAS J. SHUSTARICH

SIGNATURE

DATE yy/mm/dd LICENSE # 21210

Project Number: 227704791

04791e_sd_17.dgn

JWT 2022.03.14

Drawing No. 17

Revision 0

Sheet 17 of 18

U:\227704791\drafting\04791e_sd_17.dgn
By: jeffrey.tepfer

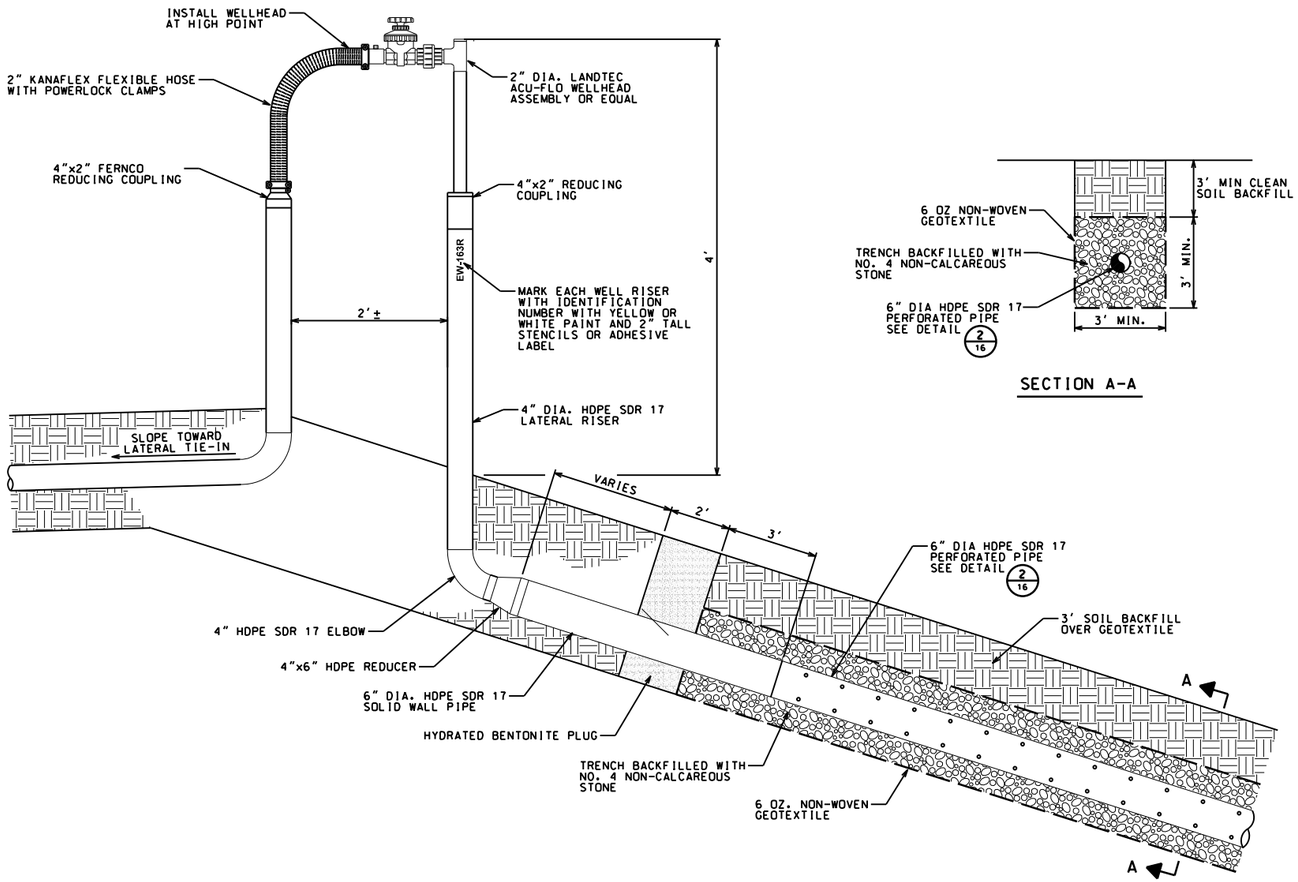

SECTION A-A

HORIZONTAL LFG COLLECTOR DETAIL 1/18

NOT TO SCALE

U:\227704791\cadfiles\04791e_sd_18.dgn
By: jeffrey.tepler

Stantec

Issued	By	Appd.	YY.MM.DD

Client/Project
BFI WASTE SYSTEMS OF NORTH AMERICA, LLC
PINE BEND LANDFILL

2022 MAJOR PERMIT MODIFICATION

INVER GROVE HEIGHTS, MINNESOTA

Gas System Details

Permit-Seal

I HEREBY CERTIFY THAT THIS PLAN, SPECIFICATION, OR REPORT WAS PREPARED BY ME OR UNDER MY DIRECT SUPERVISION AND THAT I AM A DULY LICENSED PROFESSIONAL ENGINEER UNDER THE LAWS OF THE STATE OF MINNESOTA.

PRINT NAME THOMAS J. SHUSTARICH

SIGNATURE

DATE yy/mm/dd LICENSE # 21210

Project Number: 227704791

04791e_sd_18.dgn

JWT 2022.03.15

Drawing No. 18

Revision 0

Sheet 18 of 18